T291

Walk-Behind Battery Scrubber

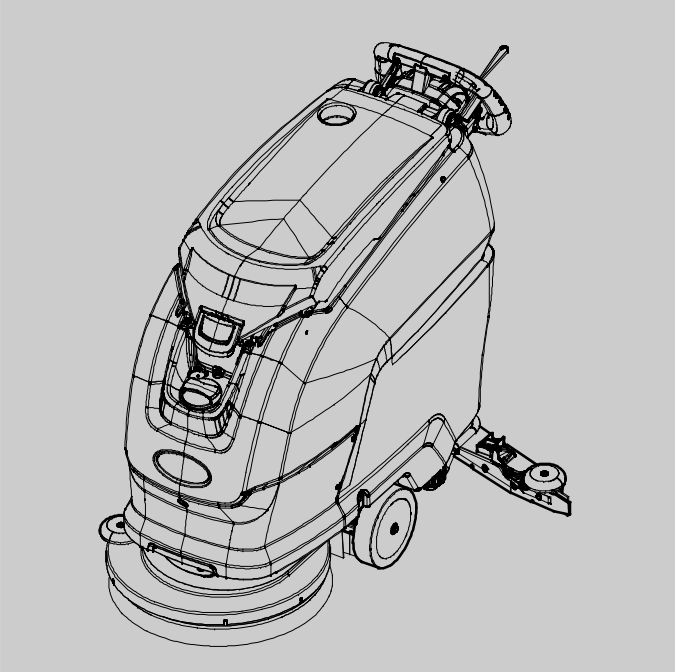

Parts Manual

Model Part No.:
9021375 - SCRUBBER [T291 55CM PAD ASSIST BR, EMEA]
9021376 - SCRUBBER [T291 55CM PROPEL BR, EMEA]
LPTB03198 - SCRUBBER [T291 55CM PAD ASSIST PD, EMEA]
LPTB03199 - SCRUBBER [T291 55CM PROPEL PD, EMEA]
LPTB03178 - SCRUBBER [T291 60CM BR, EMEA]
LPTB03179 - SCRUBBER [T291 70CM ACT BR, EMEA]
LPTB03200 - SCRUBBER [T291 60CM PD, EMEA]
LPTB03201 - SCRUBBER [T291 70CM ACT PD, EMEA]

Tennant*True*® Parts

Europe

To view, print or download
Tennant manuals, visit:

www.tennantco.com/manuals

9021579
Rev. 02 (02-2022)

Only use TENNANT Company supplied or equivalent parts. Parts and supplies may be ordered online, by phone or from any Tennant Authorized Service Center or Distributor.

Before Ordering any parts or supplies, be sure to have the machine model number and serial number available.

Serial Number Location

Tennant Company N.V.

Industrielaan 6 5405 AB
P.O. Box 6 5400 AA
Uden- The Netherlands

europe@tennantco.com

Specifications and parts are subject to change without notice.

Copyright © 2021 TENNANT Company

RECOMMENDED SPARE PARTS LIST

WEAR PARTS (55CM MODELS)	
PART NO.	**DESCRIPTION**
9017699	BLADE, SQGE, FRONT, 880L, LINATEX [STANDARD]
9017702	BLADE, SQGE, REAR, 900L, LINATEX [STANDARD]
9017695	BLADE, SQGE, FRONT, 880L, LATEX
9017694	BLADE, SQGE, REAR, 900L, LATEX
9017696	BLADE, SQGE, FRONT, 880L, PYU
9017698	BLADE, SQGE, REAR, 900L, PYU
9017761	BRUSH ASSY, DISK, SCB, 55CM, 3-LUG, PYP [STANDARD]
SPPV01351	BRUSH ASSY, DISK, SCB, 55CM, 3-LUG, PYP, SOFT
9017763	DRIVER ASSY, PAD, 55CM, 3-LUG
SPPV01460	PAD, STRIP, 21.6/550, BROWN[5PC]
SPPV01442	PAD, SCB, 21.6/550, BLU [5PC]
SPPV01433	PAD, BUFF, 21.6/550, RED [5PC]
SPPV01415	PAD, POLISH, 21.6/550, WHITE [5PC]
KTRI05244	SPLASH GUARD, 55CM (OPTION)
WEAR PARTS (60CM MODELS)	
PART NO.	**DESCRIPTION**
9017699	BLADE, SQGE, FRONT, 880L, LINATEX [STANDARD]
9017702	BLADE, SQGE, REAR, 900L, LINATEX [STANDARD]
9017695	BLADE, SQGE, FRONT, 880L, LATEX
9017694	BLADE, SQGE, REAR, 900L, LATEX
9017696	BLADE, SQGE, FRONT, 880L, PYU
9017698	BLADE, SQGE, REAR, 900L, PYU
9017729	BRUSH ASSY, DISK, SCB, 30CM, 3-LUG, PYP [STANDARD]
SPPV01514	BRUSH ASSY, DISK, SCB, 30CM, 3-LUG, MIX FBR, SOFT
9017735	DRIVER ASSY, PAD, 30CM, 3-LUG
994512	PAD, STRIP, 30.5CM, BROWN [5PC]
994511	PAD, SCRUB, 30.5CM, BLU [5PC]
994510	PAD, BUFF, 30.5CM, RED [5PC]
385940	PAD, POLISH, 30.5CM, WHITE [5PC]
KTRI05245	SPLASH GUARD, 60CM (OPTION)
WEAR PARTS (70CM MODELS)	
PART NO.	**DESCRIPTION**
9017813	BLADE, SQGE, FRONT, 1020L, LINATEX [STANDARD]
9017814	BLADE, SQGE, REAR, 1020L, LINATEX [STANDARD]
9017801	BLADE, SQGE, FRONT, 1020L, LATEX
9017804	BLADE, SQGE, REAR, 1020L, LATEX
9017806	BLADE, SQGE, FRONT, 1020L, PYU
9017811	BLADE, SQGE, REAR, 1020L, PYU
9017816	BRUSH ASSY, DISK, SCB, 35CM, 3-LUG, PYP [STANDARD]
9017730	BRUSH ASSY, DISK, SCB, 35CM, 3-LUG, PYP, SOFT
9017820	DRIVER ASSY, PAD, 35CM, 3-LUG
994520	PAD, STRIP, 35CM, BROWN[5PC]
994519	PAD, SCRUB, 35CM, BLU [5PC]
994518	PAD, BUFF, 35CM, RED [5PC]
994754	PAD, POLISH, 35CM, WHITE [5PC]
KTRI05246	SPLASH GUARD, 70CM (OPTION)

RECOMMENDED SPARE PARTS LISTLIST

SERVICE PARTS	
PART NO.	**DESCRIPTION**
994200	BATTERY, GEL, 12VDC 76AH [GEL]
994201	BATTERY, GEL, 12VDC 105AH [GEL]
RTRT00577	WHEEL D.200 [PAD ASSIST MODEL]
897346	WHEEL D.200 [PROPEL MODEL]
MECE00746	BOARD, DISPLAY [PAD ASSIST MODEL]
MECE00810	BOARD, DISPLAY [PROPEL MODEL]
MECE00733	BOARD, PCB [PAD ASSIST MODEL]
MECE00786	BOARD, PCB [PROPEL MODEL]
MOCC00465	TRANSAXLE, MOTOR ASSY [PROPEL MODEL]
9017743	BRUSH KIT, MOTOR, TRANSAXLE [2 PC]
MOCC00449	MOTOR, BRUSH [SINGLE DISK]
MOCC00450	MOTOR, BRUSH [DUAL DISK]
MEVR02923	BRUSH KIT, CARBON, BRUSH MOTOR [4 PC]
9017716	FAN, MOTOR
9017687	BRUSH, CARBON, VAC FAN MOTOR
MOCC00448	ACTUATOR, BRUSH HEAD [ACTUATOR MODEL]
GUGO00509	GASKET VACUUM MOTOR
9017712	HOSE ASSY, RECOVERY
FTDP00678	FILTER, VACUUM MOTOR
MTCR00107	CHAIN, SQUEEGEE, LIFT
TBFX01069	HOSE, DRAIN, RECOVERY TANK
9017718	VALVE, WATER, SOLENOID, 24VDC
MPVR13036	HANDLE SQUEEGEE LIFTING
9017788	CASTER, SWIVEL, PU, 80MM X 25MM
9018501	WHEEL, SQUEEGEE
MPVR01097	HOOK, DRAIN HOSE
PMVR06995	KNOB, SQUEEGEE
MPVR12967	LEVER CLOSURE LID
MPVR10565	FILTER SOLUTION TANK
MECI00592	SENSOR, SOLUTION TANK
MECI00662	SENSOR LEVEL, RECOVERY TANK
9018332	FUSE, 50A
897301	FUSE 30A OMEGA FT3030
KTRI06373	Chem Dose Kit (OPTION)
KTRI04848	Tools Bar (OPTION)
MECB00922	CORD, POWER, CHARGER [EU]
1032820	CORD, POWER, CHARGER [UK]
MEVR02641	KEY, ELECTRONIC [PAD ASSIST MODEL]
MEVR02642	KEY, ELECTRONIC, W/RFID [PROPEL MODEL]

BRUSHES / PAD DRIVER & PADS

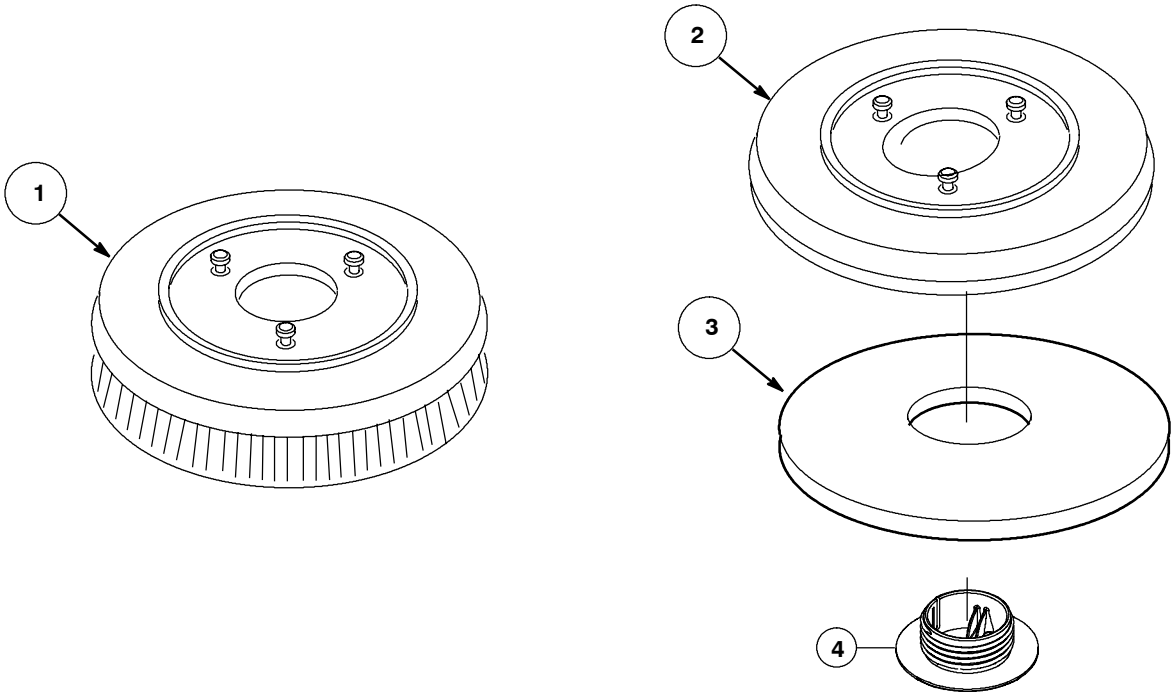

55cm Single Disk Model

Ref.	Part No.	Description	Quantity
0001	9017761	BRUSH ASSY, DISK, SCB, 55CM, 3-LUG, PYP [STANDARD]	1,00
0001	SPPV01351	BRUSH ASSY, DISK, SCB, 55CM, 3-LUG, PYP, SOFT	1,00
0002	9017763	DRIVER ASSY, PAD, 55CM, 3-LUG	1,00
0003	SPPV01460	PAD, STRIP, 21.6/550, BROWN[5PC]	1,00
0003	SPPV01442	PAD, SCB, 21.6/550, BLU [5PC]	1,00
0003	SPPV01433	PAD, BUFF, 21.6/550, RED [5PC]	1,00
0003	SPPV01415	PAD, POLISH, 21.6/550, WHITE [5PC]	1,00
0004	MPR04088	LOCK, CENTER, PAD DRIVER	1,00

60cm Dual Disk Model

Ref.	Part No.	Description	Quantity
0001	9017729	BRUSH ASSY, DISK, SCB, 30CM, 3-LUG, PYP [STANDARD]	1,00
0001	SPPV01514	BRUSH ASSY, DISK, SCB, 30CM, 3-LUG, MIX FBR, SOFT	1,00
0002	9017735	DRIVER ASSY, PAD, 30CM, 3-LUG	1,00
0003	994512	PAD, STRIP, 30.5CM, BROWN [5PC]	1,00
0003	994511	PAD, SCRUB, 30.5CM, BLU [5PC]	1,00
0003	994510	PAD, BUFF, 30.5CM, RED [5PC]	1,00
0003	385940	PAD, POLISH, 30.5CM, WHITE [5PC]	1,00
0004	MPR04088	LOCK, CENTER, PAD DRIVER	1,00

70cm Dual Disk Model

Ref.	Part No.	Description	Quantity
0001	9017816	BRUSH ASSY, DISK, SCB, 35CM, 3-LUG, PYP [STANDARD]	1,00
0001	9017730	BRUSH ASSY, DISK, SCB, 35CM, 3-LUG, PYP, SOFT	1,00
0002	9017820	DRIVER ASSY, PAD, 35CM, 3-LUG	1,00
0003	994520	PAD, STRIP, 35CM, BROWN [5PC]	1,00
0003	994519	PAD, SCRUB, 35CM, BLU [5PC]	1,00
0003	994518	PAD, BUFF, 35CM, RED [5PC]	1,00
0003	994754	PAD, POLISH, 35CM, WHITE [5PC]	1,00
0004	MPR04088	LOCK, CENTER, PAD DRIVER	1,00

SPLASH GUARD KIT, 55CM - KTRI05244 [OPTION]

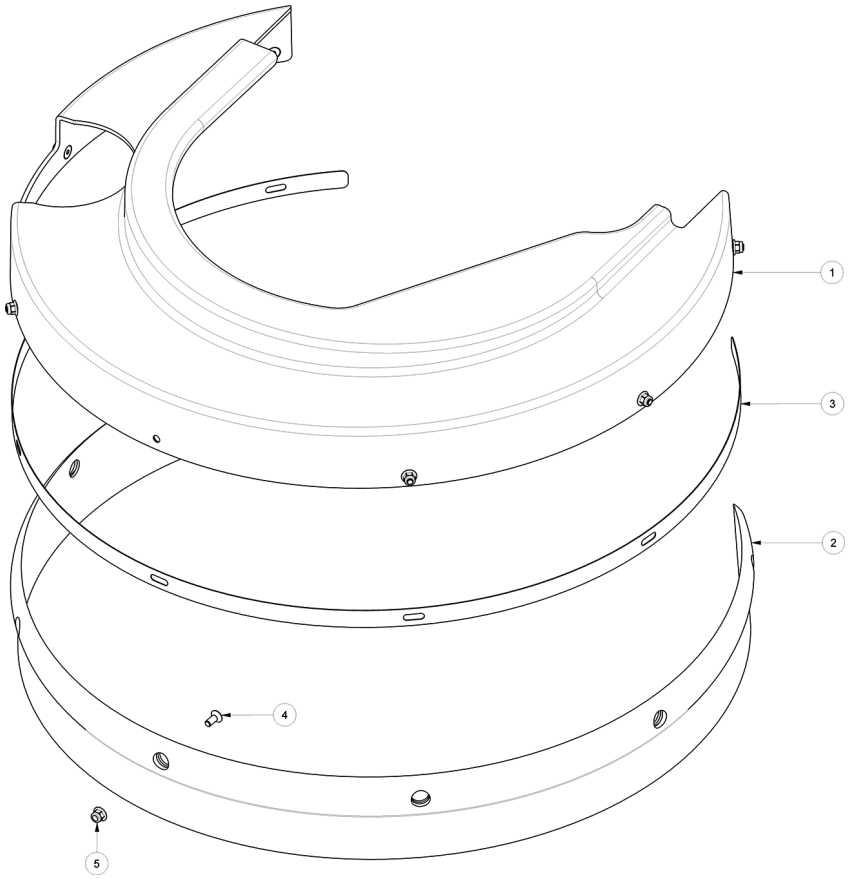

Ref.	Part No.	Description	Quantity
	KTRI05244	SPLASH GUARD, 55CM (Includes 1,2,3,4,5)	1,00
0001	MPVR11904	SUPPORT, FLAP	1,00
0002	MPVR12718	GUARD, SPLASH	1,00
0003	LAFN11270	SHEET METAL PA. SPLASH GUARD	1,00
0004	897658	SCREW, M5X12, TSPEI, UNI5933	7,00
0005	VTDD00531	NUT M5 DIN6926 INOX	7,00

SPLASH GUARD KIT, 60CM - KTRI05245 [OPTION]

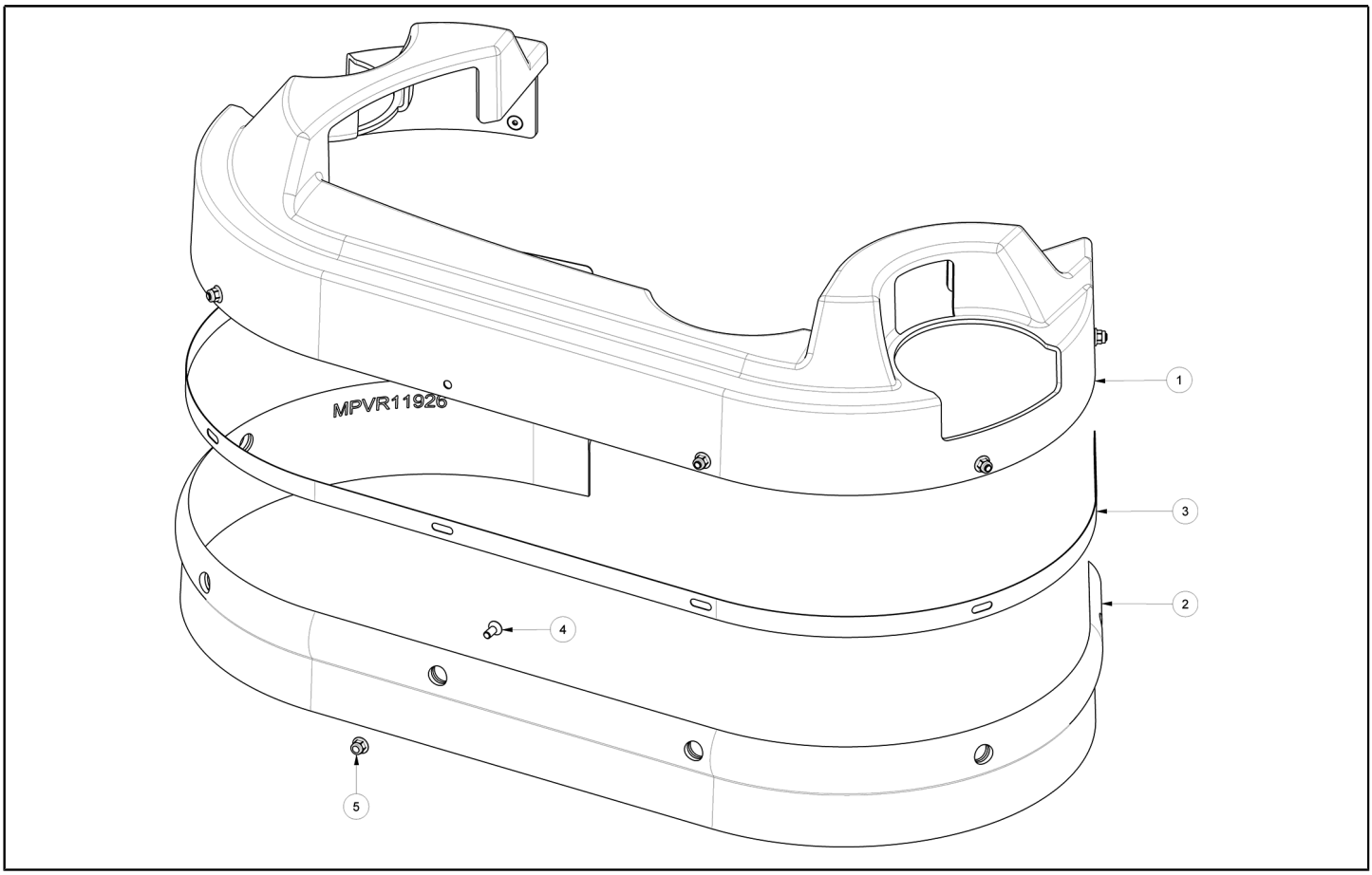

Ref.	Part No.	Description	Quantity
	KTRI05245	KSPLASH GUARD, 60CM [T391] (Includes 1,2,3,4,5)	1,00
0001	MPVR11905	SUPPORT FLAP PS 60CM	1,00
0002	MPVR11926	RUBBER SPLASH GUARD 60CM	1,00
0003	LAFN11271	SHEET METAL PA. SPLASH GUARD 60CM	1,00
0004	897658	SCREW, M5X12, TSPEI, UNI5933	7,00
0005	VTDD00531	NUT M5 DIN6926 INOX	7,00

SPLASH GUARD KIT, 70CM - KTRI05246 [OPTION]

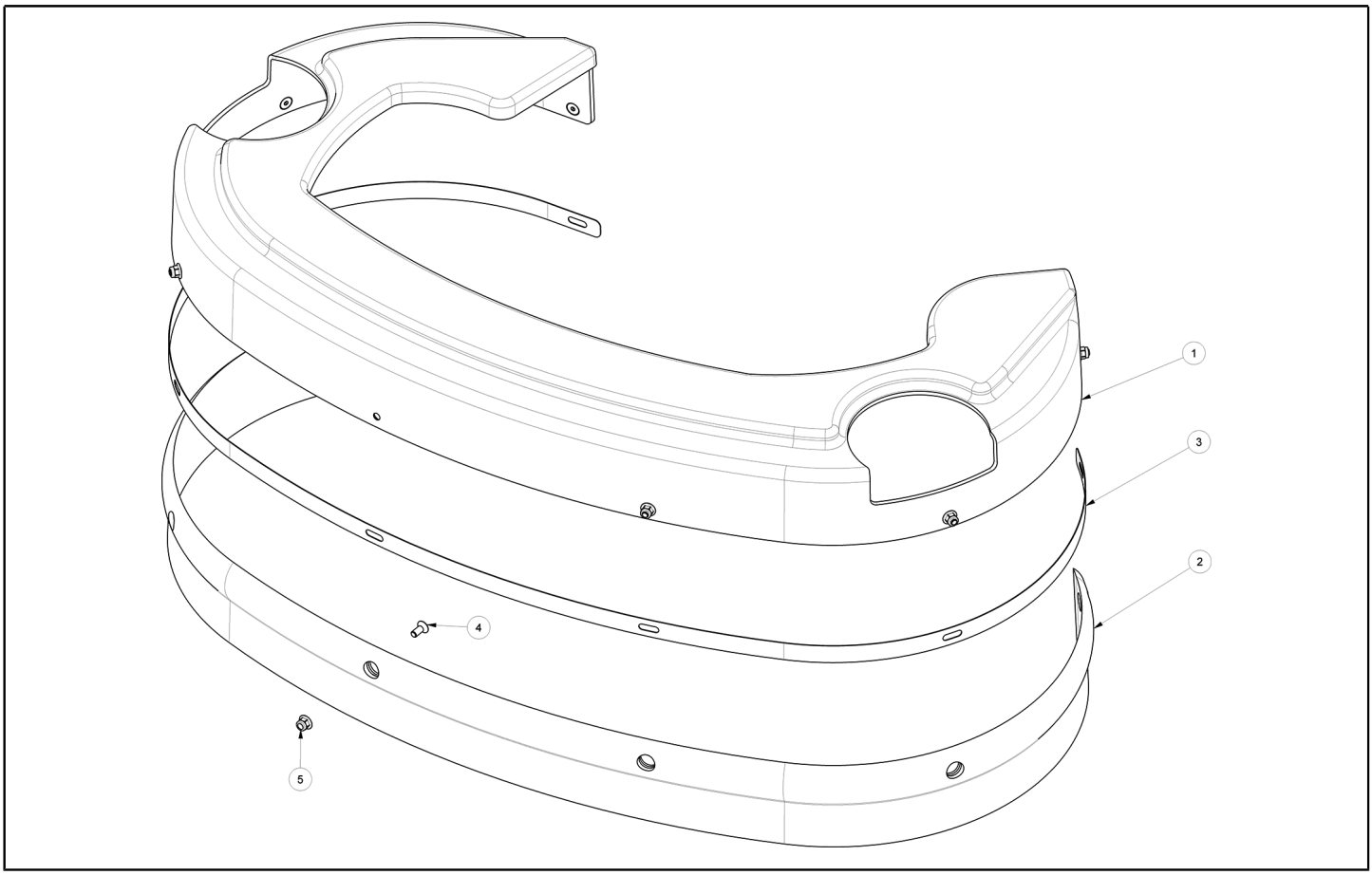

Ref.	Part No.	Description	Quantity
	KTRI05246	SPLASH GUARD, 70CM [T391] (Includes 1,2,3,4,5)	1,00
0001	MPVR11906	SUPPORT FLAP PS 70CM	1,00
0002	MPVR11927	RUBBER SPLASH GUARD 70CM	1,00
0003	LAFN11272	SHEET METAL PA. SPLASH GUARD 70CM	1,00
0004	897658	SCREW, M5X12, TSPEI, UNI5933	7,00
0005	VTDD00531	NUT M5 DIN6926 INOX	7,00

LIFT PEDAL GROUP

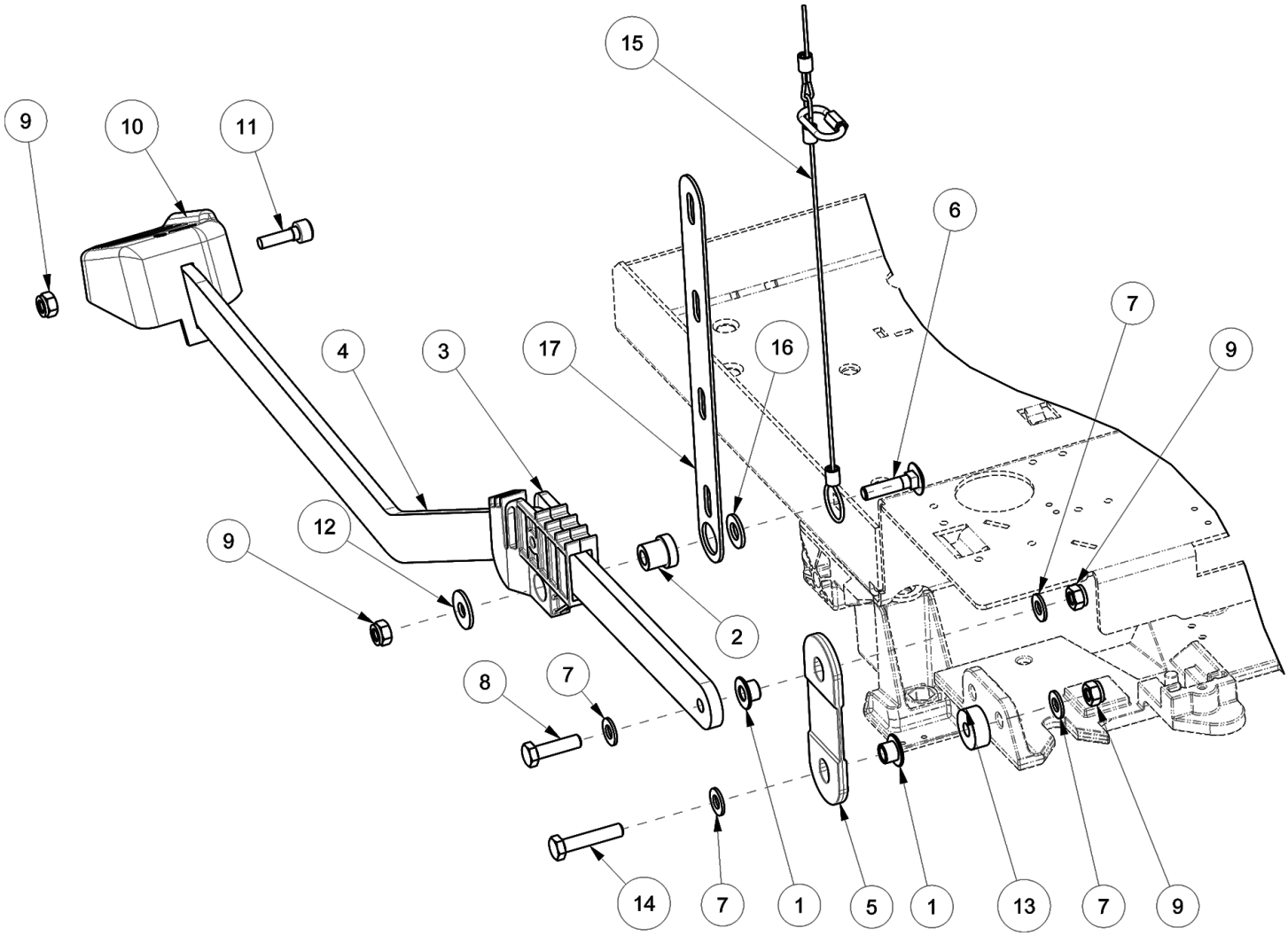

Ref.	Part No.	Description	Quantity
0001	LAFN10998	BUSHING -	2,00
0002	LAFN10997	SPACER	1,00
0003	MPVR06500	SUPPORT LIFTING PEDAL	1,00
0004	LAFN09427	LEVER PEDAL BRUSH HEAD	1,00
0005	MPVR06502	PLATE LINK PEDAL-BRUSH HEAD	1,00
0006	VTVT01143	SCREW TTQDE M8X35	1,00
0007	897152	WASHER, D.8, UNI6592, INOX	4,00
0008	897246	SCREW, TE, M8X30, UNI5739, INOX	1,00
0009	VTDD01701	NUT M8	4,00
0010	MPVR06471	PEDAL HEAD LIFTING	1,00
0011	VTVT00639	SCREW TCEI 8X25	1,00
0012	897120	WASHER, D.8X24, UNI6593, INOX	1,00
0013	MPVR10793	SPACER	1,00
0014	897536	SCREW, TE, M.8X40	1,00
0015	CMCV00399	CABLE -	1,00
0016	897432	WASHER, D. 10X21, UNI6592, INOX	1,00
0017	MPVR11573	GUIDE	1,00

FRAME GROUP

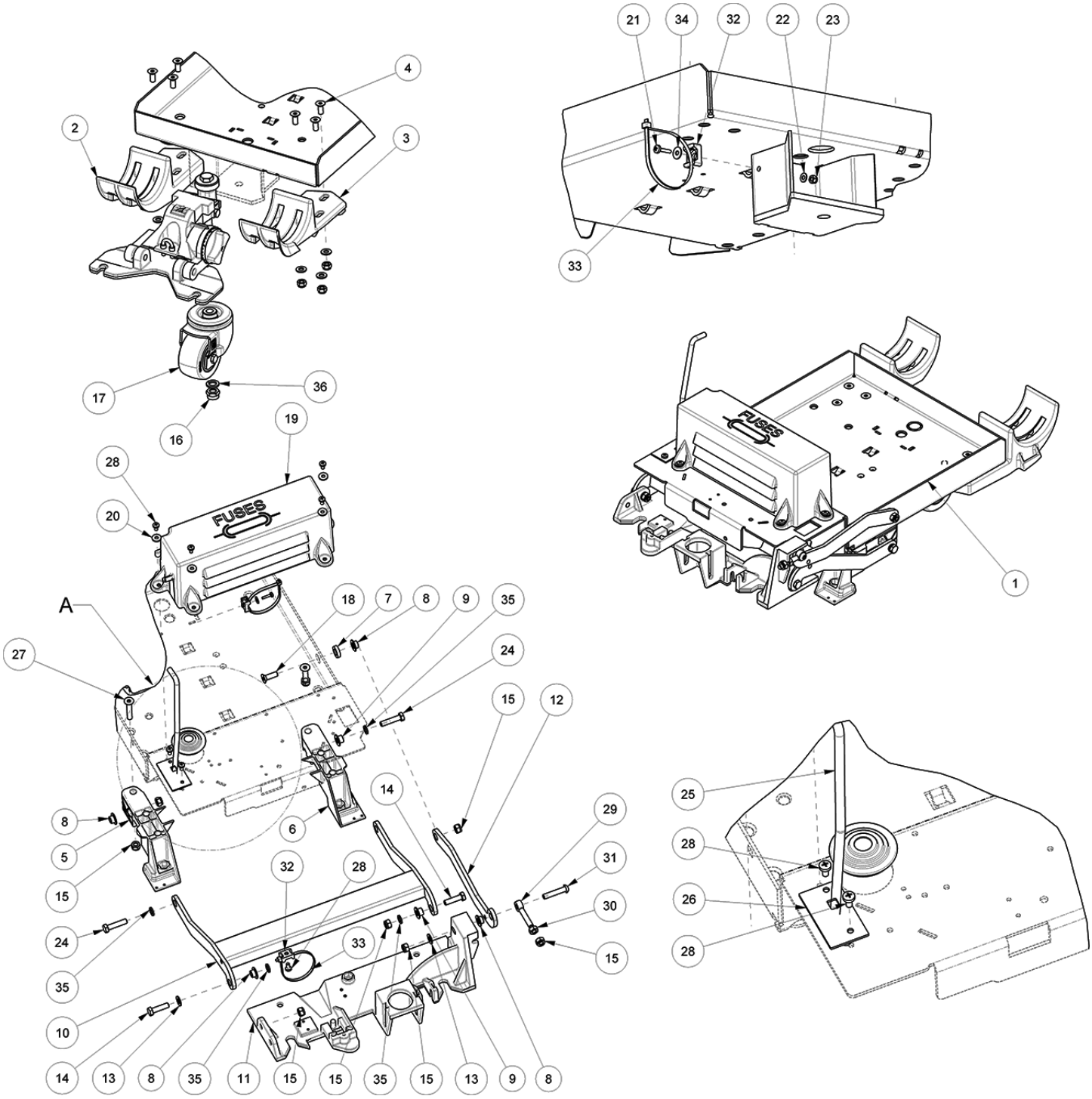

21
34
32
22
23
4
2
3
33
17
36
16
19
28
20
FUSES
A
18
7
8
9
35
27
24
15
12
1
14
29
8
6
5
15
32
28
31
30
24
33
15
35
10
14
13
8
35
11
15
15
35
15
13
9
8
25
28
26
28

FRAME GROUP

Ref.	Part No.	Description	Quantity
0001	LAFN09477	FRAME	1,00
0002	MFVR00286	SUPPORT -	1,00
0003	MFVR00287	SUPPORT -	1,00
0004	VTVT01352	SCREW TSPEI M8X20	6,00
0005	MFVR00283	SUPPORT -	1,00
0006	MFVR00284	SUPPORT -	1,00
0007	LAFN11009	SPACER -	1,00
0008	897218	BUSHING BRUSH DECK SUPPORT	4,00
0009	LAFN10998	BUSHING -	2,00
0010	LAFN09420	ARM -	1,00
0011	MFVR00240	BRACKET BRUSH HEAD SUPPORT	1,00
0012	LAFN09421	LEVER -	1,00
0013	897152	WASHER, D.8, UNI6592, INOX	8,00
0014	VTVT00140	SCREW TE M8x30	2,00
0015	VTDD01701	NUT M8	15,00
0016	897241	NUT, M.12, INOX, A2	1,00
0017	9017788	CASTER, SWIVEL, PU, 80MM X 25MM	1,00
0018	VTVT00781	SCREW TSPEI M.8-25	1,00
0019	MPVR06505	COVERING ELECTRONIC BOX	1,00
0020	897384	WASHER D. 5X14 INX	4,00
0021	897123	SCREW M4X16	1,00
0022	897156	WASHER D. 4 INX	1,00
0023	897276	NUT M 4 ATB A2	1,00
0024	VTVT00017	SCREW TE UNI 5739 8X35 ZB	2,00
0025	LAFN11014	PIN -	1,00
0026	LAFN11077	PLATE -	1,00
0027	VTVT01322	SCREW TSPEI 8X45 UNI5933 INX	2,00
0028	VTVT01297	SCREW M 4X 8 TCB-TC UNI 8112	7,00
0029	VTVR00335	TIE ROD -	1,00
0030	897229	NUT, M8, UNI5588, INOX, A2	1,00
0031	VTVT01431	SCREW M8X40	1,00
0032	MPVR10765	SUPPORT FOR CLAMP	2,00
0033	FSVR00049	CLAMP 4,5x200 black	2,00
0034	VTRS00017	WASHER STEEL INOX 4X12	1,00
0035	897216	WASHER, D. 8, GRW, UNI1751, INOX	4,00
0036	897544	WASHER, D.12, GROVER, UNI1751, INOX	1,00

FRAME GROUP - ACTUATOR MODEL

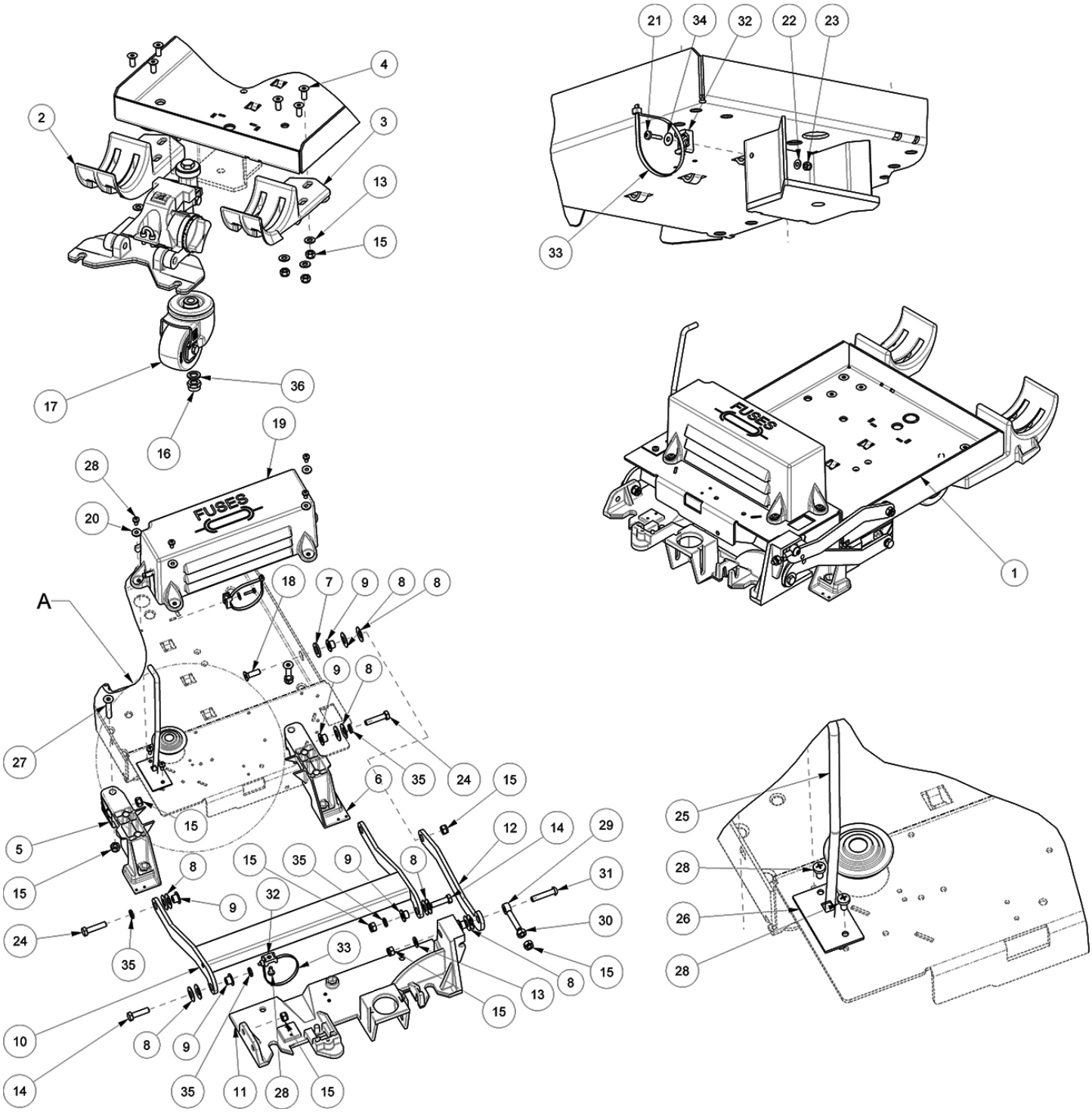

FRAME GROUP - ACTUATOR MODEL

Ref.	Part No.	Description	Quantity
0001	LAFN09477	FRAME CT50/70	1,00
0002	MFVR00286	SUPPORT -	1,00
0003	MFVR00287	SUPPORT -	1,00
0004	VTVT01352	SCREW TSPEI M8X20	6,00
0005	MFVR00283	SUPPORT -	1,00
0006	MFVR00284	SUPPORT -	1,00
0007	897215	WASHER, D.12X24, UNI6592, INOX	1,00
0008	MLML00095	DISC SPRINGS 12,2x25x0,9 DIN 2093	12,00
0009	LAFN10998	BUSHING -	6,00
0010	LAFN09420	ARM -	1,00
0011	MFVR00240	BRACKET BRUSH HEAD SUPPORT CT51	1,00
0012	LAFN09421	LEVER -	1,00
0013	897152	WASHER, D.8, UNI6592, INOX	7,00
0014	VTVT00140	SCREW TE M8x30	2,00
0015	VTDD01701	NUT M8	15,00
0016	897241	NUT, M.12, INOX, A2	1,00
0017	9017788	CASTER, SWIVEL, PU, 80MM X 25MM	1,00
0018	VTVT00781	SCREW TSPEI M.8-25	1,00
0019	MPVR06505	COVERING ELECTRONIC BOX CT51	1,00
0020	897384	WASHER D. 5X14 INX	4,00
0021	897123	SCREW M4X16	1,00
0022	897156	WASHER D. 4 INX	1,00
0023	897276	NUT M 4 ATB A2	1,00
0024	VTVT00017	SCREW TE UNI 5739 8X35 ZB	2,00
0025	LAFN11014	PIN -	1,00
0026	LAFN11077	PLATE -	1,00
0027	VTVT01322	SCREW TSPEI 8X45 UNI5933 INX	2,00
0028	VTVT01297	SCREW M 4X 8 TCB-TC UNI 8112	7,00
0029	VTVR00335	TIE ROD -	1,00
0030	897229	NUT, M8, UNI5588, INOX, A2	1,00
0031	VTVT01431	SCREW M8X40	1,00
0032	MPVR10765	SUPPORT FOR CLAMP	2,00
0033	FSVR00049	CLAMP 4,5x200 black	2,00
0034	VTRS00017	WASHER STEEL INOX 4X12	1,00
0035	897216	WASHER, D. 8, GRW, UNI1751, INOX	4,00
0036	897544	WASHER, D.12, GROVER, UNI1751, INOX	1,00

SQUEEGEE SUPPORT BRACKET GROUP

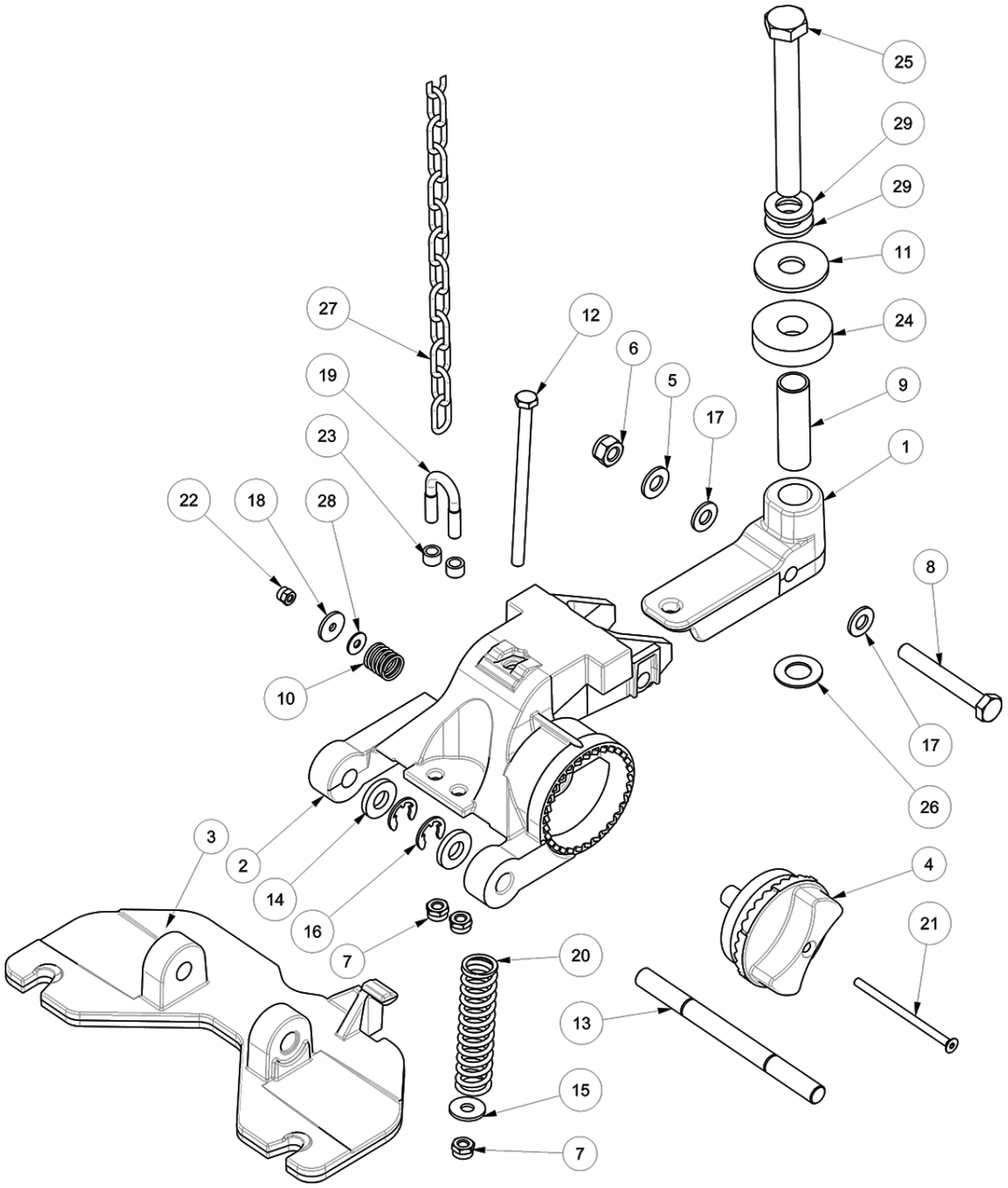

Ref.	Part No.	Description	Quantity
0001	MFVR00235	SUPPORT PIVOT SQUEEGEE	1,00
0002	MFVR00236	SUPPORT REGULATION SQUEEGEE	1,00
0003	MFVR00237	SUPPORT SQUEEGEE	1,00
0004	MPVR06468	KNOB SQUEEGEE ANGLE ADJUSTMENT	1,00
0005	897152	WASHER, D.8, UNI6592, INOX	1,00
0006	897124	NUT, M8, INOX	1,00
0007	897138	NUT M6 INOX	3,00
0008	897253	SCREW, M8X60	1,00
0009	LAFN09439	BUSHING 13X16X51	1,00
0010	MLML00491	SPRING SQUEEGEE KNOB	1,00
0011	897247	WASHER, D. 12X36X2.5, UNI6593	1,00
0012	VTVT01437	SCREW TE M6x100	1,00
0013	LAFN09417	PIN FOR SQUEEGEE SUPPORT	1,00
0014	VTRS00382	WASHER -	2,00
0015	897112	WASHER D. 6X18 INX UNI 6593	1,00
0016	VTAE00012	SEEGER RADIALE UNI 7434 D.10	2,00
0017	897157	WASHER NYLON 66 D. 84X17X2	2,00
0018	897149	WASHER 4-16 INOX A2	1,00
0019	897251	BRACKET, M6X11X29	1,00
0020	MLML00490	SPRING -	1,00
0021	VTVT01585	SCREW 4X70 UNI 5933	1,00
0022	897160	NUT, M4, INOX, ZN	1,00
0024	897255	WASHER, M15X40	1,00
0025	VTVT01503	SCREW M12X105 UNI5737 ZN 8.8	1,00
0026	VTRS88000	WASHER ELAST.ONDUL.DI 13	1,00
0027	MTCR00107	CHAIN SQUEEGEE LIFTING	1,00
0028	VTRS00017	WASHER STEEL INOX 4X12	1,00
0029	897215	WASHER, D.12X24, UNI6592, INOX	2,00

WHEEL FRAME GROUP [PAD ASSIST MODEL]

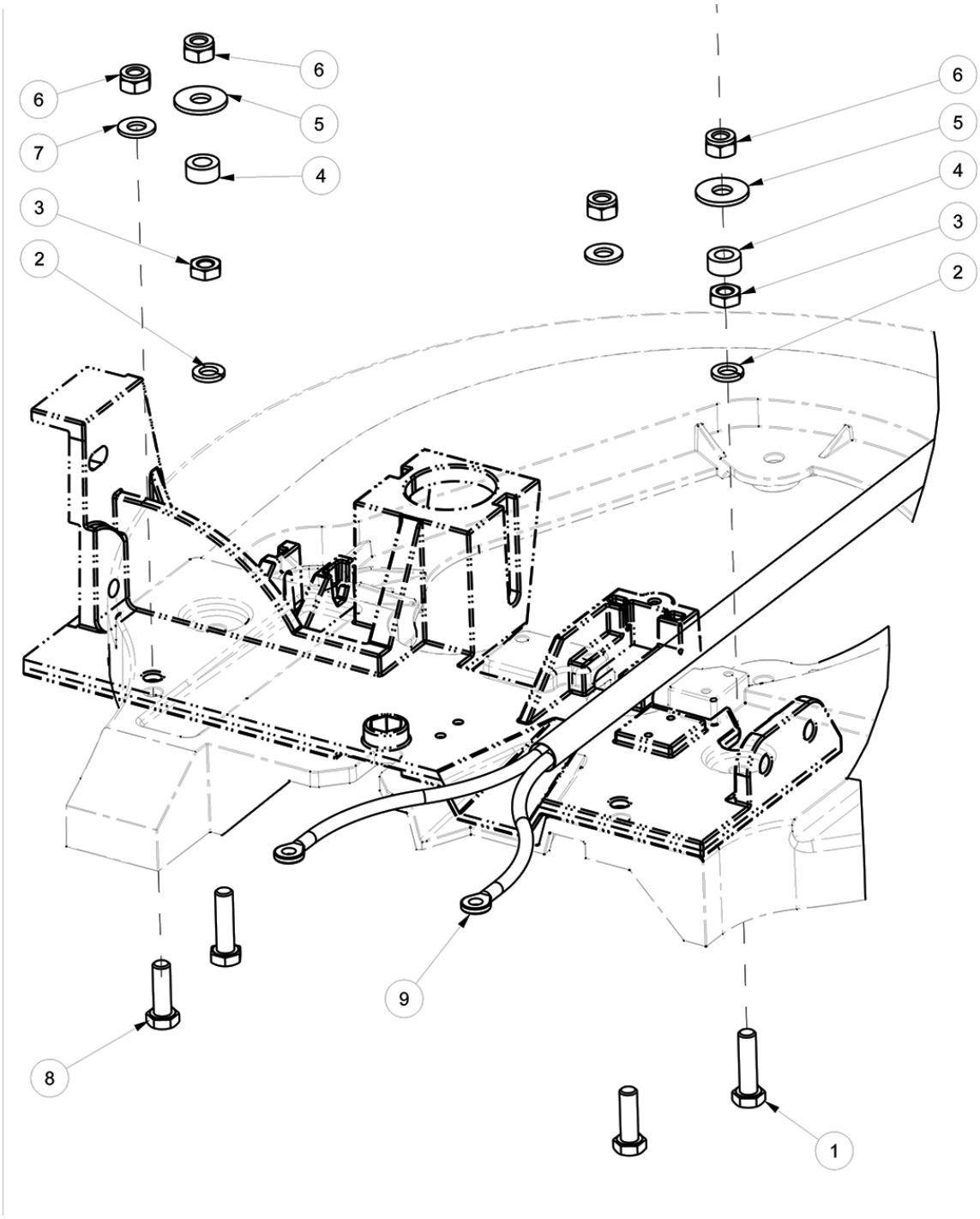

Ref.	Part No.	Description	Quantity
0001	897246	SCREW, TE, M8X30, UNI5739, INOX	2,00
0002	897216	WASHER, D. 8, GRW, UNI1751, INOX	2,00
0003	VTDD00057	NUT UNI 5589 M8 BASSO ZB	2,00
0004	LAFN11003	SPACER -	2,00
0005	897120	WASHER, D.8X24, UNI6593, INOX	2,00
0006	897124	NUT, M8, INOX	4,00
0007	897152	WASHER, D.8, UNI6592, INOX	2,00
0008	897233	SCREW, TE, M8X25, UNI5739, INOX	2,00
0009	MECB01945	WIRING	1,00

WHEEL GROUP [PAD ASSIST MODEL]

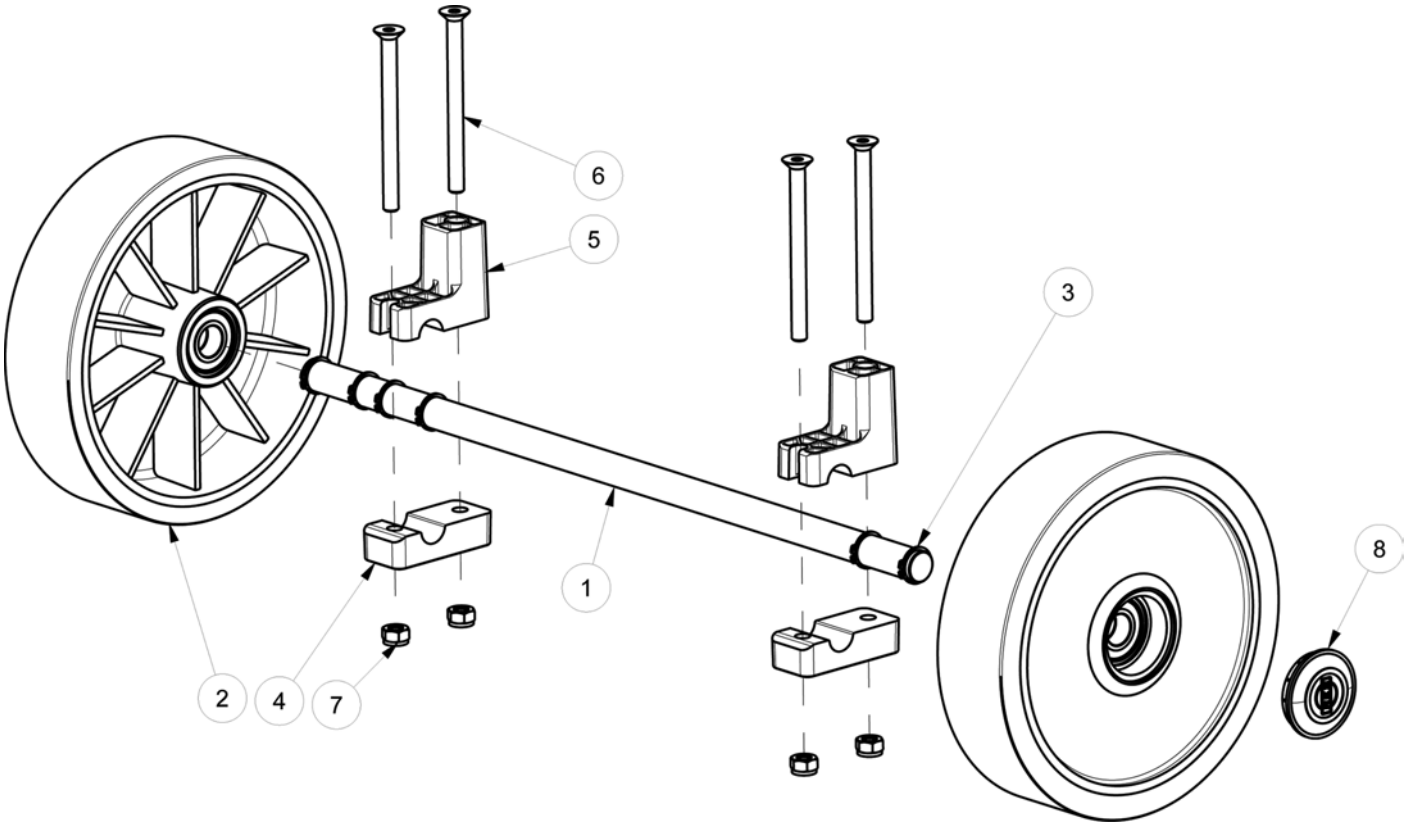

Ref.	Part No.	Description	Quantity
0001	LAFN09422	AXLE -	1,00
0002	RTRT00577	WHEEL D.200 LW 3K17	2,00
0003	VTAE00084	CIRCLIP D. 20	6,00
0004	MPVR06485	HOSE COLLAR	2,00
0005	MPVR10579	SUPPORT -	2,00
0006	VTVT01590	SCREW M8X100 UNI933 A2	4,00
0007	897124	NUT, M8, INOX	4,00
0008	MPVR11199	CAP G48	2,00

WHEEL GROUP [PROPEL MODEL]

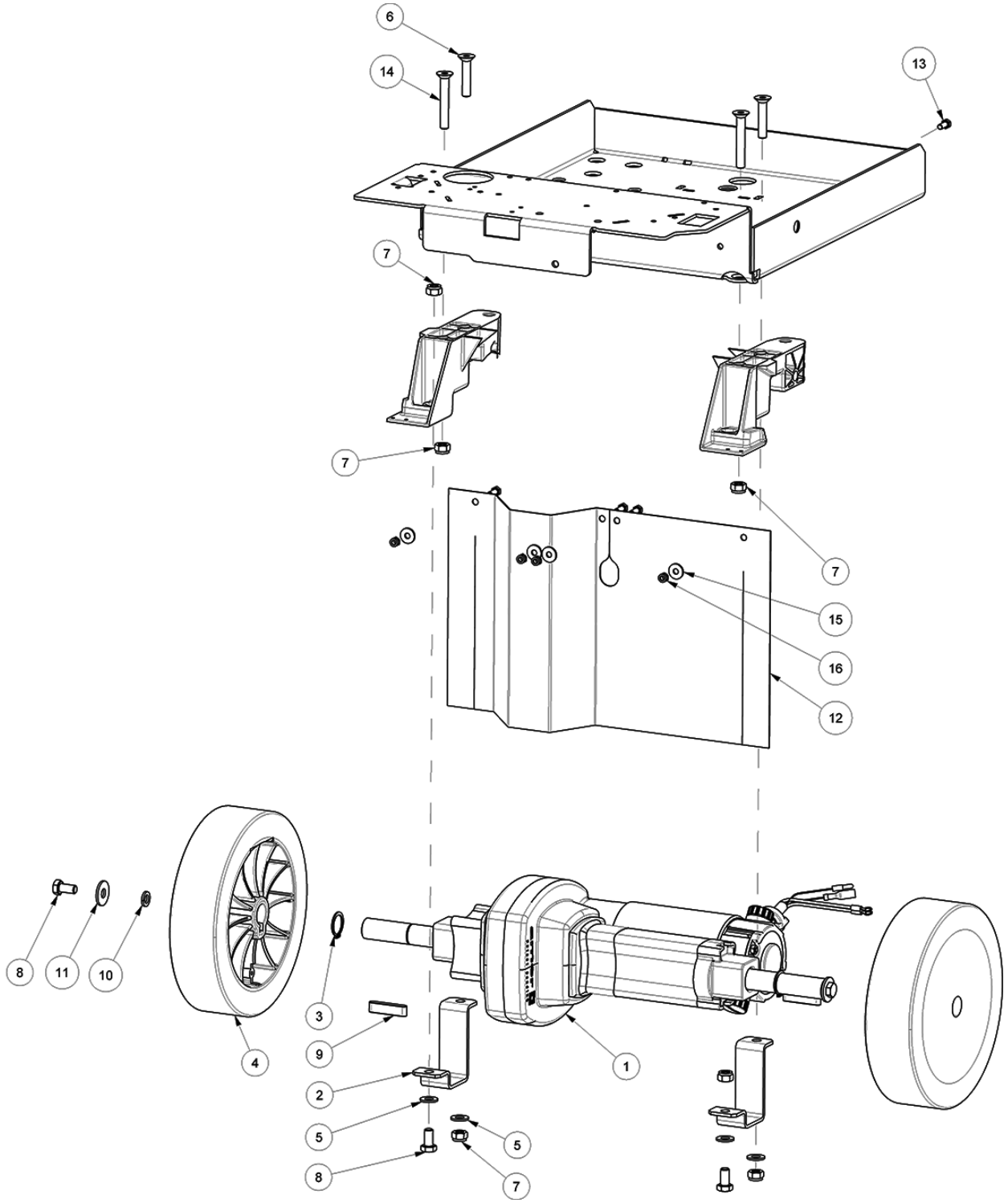

Ref.	Part No.	Description	Quantity
0001	MOCC00465	MOTOR TRACTION 24V 200W	1,00
0001	9017743	VR, BRUSH KIT, MOTOR, TRANSAXLE [2 PC]	1,00
0002	LAFN09453	SUPPORT TRACTION MOTOR	2,00
0003	897280	CIRCLIP, D. 20, UNI7435	2,00
0004	897346	WHEEL D.200	2,00
0005	897152	WASHER, D.8, UNI6592, INOX	4,00
0006	VTVT01589	SCREW M8X40 UNI933 A2	2,00
0007	VTDD01701	NUT M8	6,00
0008	897184	SCREW, TE, M8X16, UNI5739, A2	4,00
0009	897351	KEY, M6X10X40, UNI6604 A (H.10)	2,00
0010	897216	WASHER, D. 8, GRW, UNI1751, INOX	2,00
0011	897120	WASHER, D.8X24, UNI6593, INOX	2,00
0012	MPVR10760	FLAP TRACTION MOTOR	1,00
0013	897459	SCREW, M5X12, TE, INOX	4,00
0014	VTVT00992	SCREW M8x55 INOX	2,00
0015	897384	WASHER D. 5X14 INX	4,00
0016	VTDD01693	NUT, M5, INOX	4,00

SCRUB HEAD GROUP [55CM MODEL]

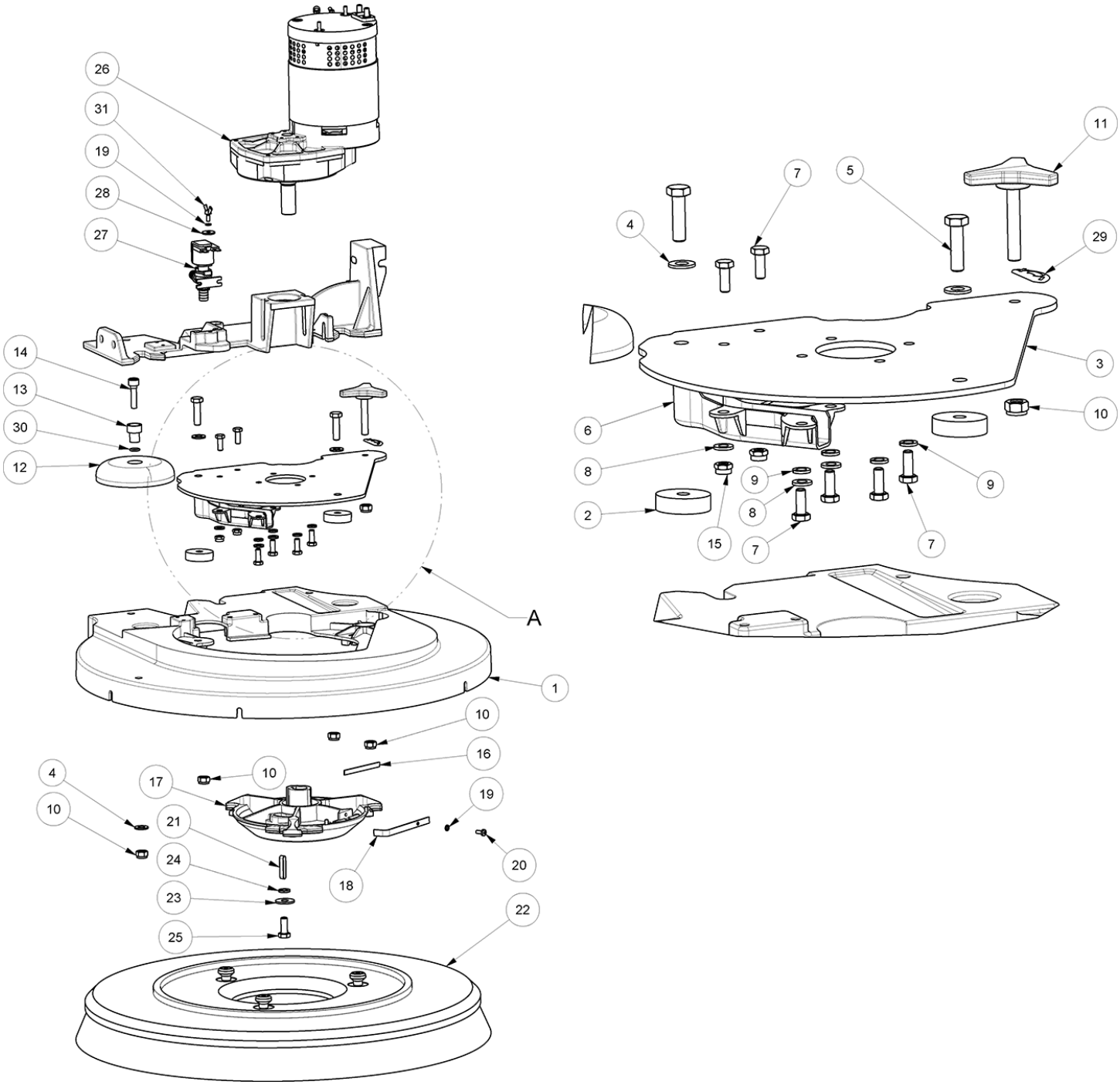

SCRUB HEAD GROUP [55CM MODEL]

Ref.	Part No.	Description	Quantity
0001	MFVR00238	HEAD DECK ALUMINIUM 50-55	1,00
0002	GUVR01012	WASHER 8X35	2,00
0003	LAFN09424	PLATE -	1,00
0004	897152	WASHER, D.8, UNI6592, INOX	3,00
0005	897530	SCREW, TE, M8X30, UNI5737, INOX	2,00
0006	MPVR06503	TUBE	1,00
0007	897128	SCREW TE 6X16 UNI5739	6,00
0008	897106	WASHER D.6 UNI 6592 INOX	4,00
0009	897129	WASHER D. 6 INX GRW UNI 1751	4,00
0010	897124	NUT, M8, INOX	5,00
0011	MPVR10568	HANDWHEEL -	1,00
0012	897101	WHEEL, BMPR, 98,5d X 21,5W	1,00
0013	897121	BUSHING NUOVO RUOTINO STRONG	1,00
0014	897122	SCREW, TCEI, M8X30	1,00
0015	897138	NUT M6 INOX	2,00
0016	MLML00470	SPRING -	1,00
0017	MFVR00327	DRIVE DISK CONICAL ALUM.	1,00
0018	MLML00350	SPRING ALUM. CONICAL DRIVER	1,00
0019	897204	WASHER D. 4 GROVER A2 UNI1751	1,00
0020	897313	SCREW, TCB, TC, M4X10	2,00
0021	VTVR16617	WEDGE 6X 6X30 UNI 6604	1,00
0022	9017761	BRUSH ASSY, DISK, SCB, 50CM, 3-LUG, PYP	1,00
0023	897120	WASHER, D.8X24, UNI6593, INOX	1,00
0024	897216	WASHER, D. 8, GRW, UNI1751, INOX	1,00
0025	897316	SCREW, TE, M8X20, UNI5739, INOX	1,00
0026	MOCC00449	MOTOR BRUSH CT51-71 BT55	1,00
0026	MEVR02923	CARBON MOCC00449-MOCC00450	1,00
0027	9017718	VALVE, WATER, SOLENOID, 24VDC	1,00
0028	897149	WASHER 4-16 INOX A2	1,00
0029	KTRI06377	LABEL, KIT, T291 (COMPLETE SET)	1,00
0030	897102	O-RING, 13.00 Od X 10.00 Id	1,00
0031	897169	SCREW, M4X10	1,00

SCRUB HEAD GROUP [60CM MODEL]

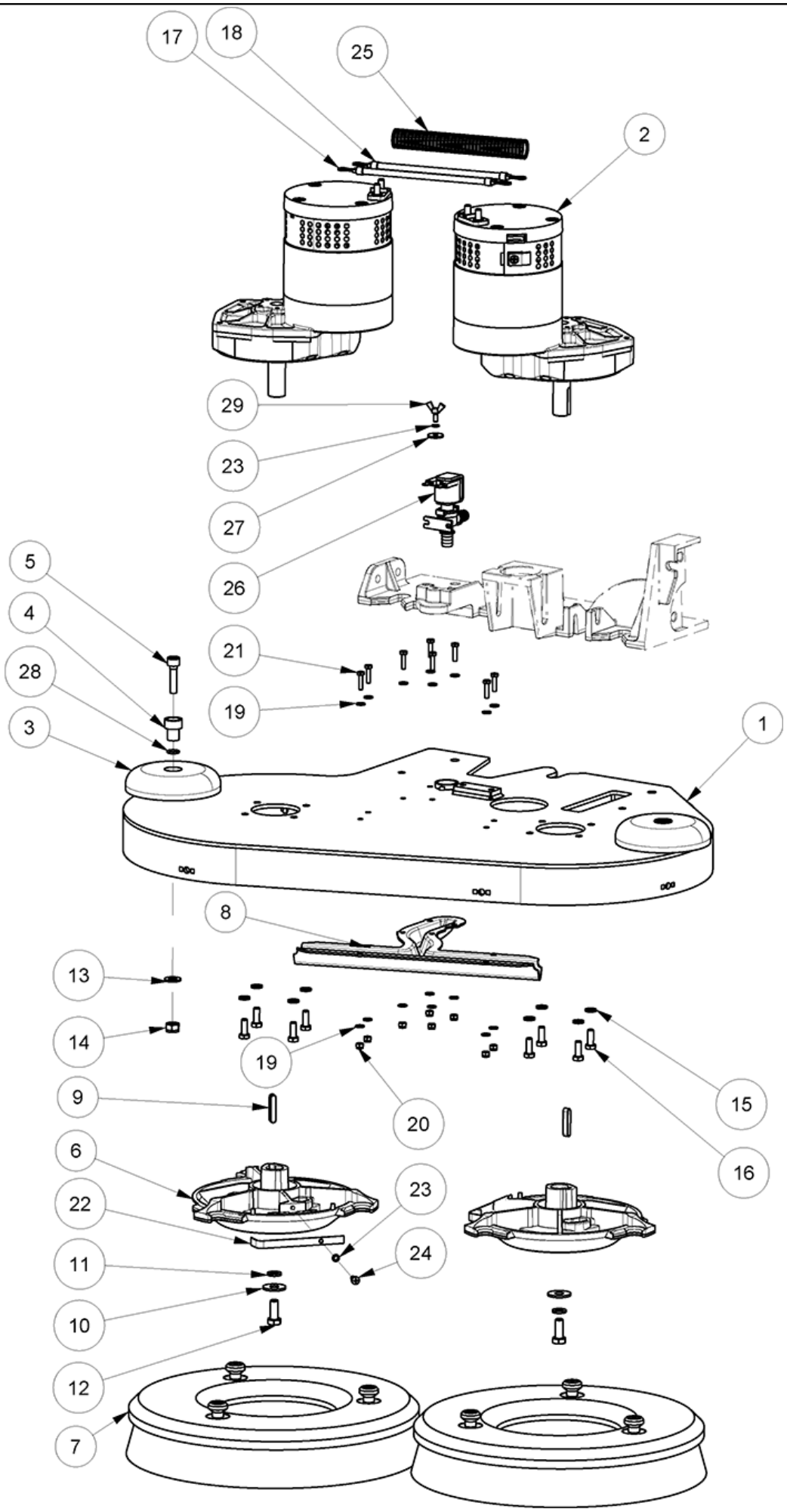

SCRUB HEAD GROUP [60CM MODEL]

Ref.	Part No.	Description	Quantity
0001	LAFN09443	HEAD 60	1,00
0002	MOCC00450	MOTOR BRUSH	2,00
0002	MEVR02923	CARBON MOCC00449-MOCC00450	1,00
0003	897101	WHEEL, BMPR, 98,5d X 21,5W	2,00
0004	897121	BUSHING NUOVO RUOTINO STRONG	2,00
0005	897122	SCREW, TCEI, M8X30	1,00
0006	MFVR00301	DRIVE DISK	2,00
0007	9017729	BRUSH ASSY, DISK, SCB, 30CM, 3-LUG, PYP	2,00
0008	MPVR06487	TUBE -	1,00
0009	VTVR16617	WEDGE 6X 6X30 UNI 6604	2,00
0010	897120	WASHER, D.8X24, UNI6593, INOX	2,00
0011	897216	WASHER, D. 8, GRW, UNI1751, INOX	2,00
0012	897316	SCREW, TE, M8X20, UNI5739, INOX	2,00
0013	897152	WASHER, D.8, UNI6592, INOX	2,00
0014	897124	NUT, M8, INOX	2,00
0015	897129	WASHER D. 6 INX GRW UNI 1751	8,00
0016	897128	SCREW TE 6X16 UNI5739	8,00
0017	MECB01014	CABLE 6,5mmq	1,00
0018	MECB02008	WIRING L320 RED W/TERMINALS	1,00
0019	897156	WASHER D. 4 INX	16,00
0020	897276	NUT M 4 ATB A2	8,00
0021	897195	SCREW, TE, M4X16, UNI5739, INOX	8,00
0022	MLML00350	SPRING ALUM. CONICAL DRIVER	2,00
0023	897204	WASHER D. 4 GROVER A2 UNI1751	2,00
0024	897313	SCREW, TCB, TC, M4X10	3,00
0025	MEVR01577	FAIR-LEAD CT90	1,00
0026	9017718	VALVE, WATER, SOLENOID, 24VDC	1,00
0027	897149	WASHER 4-16 INOX A2	1,00
0028	897102	O-RING, 13.00 Od X 10.00 Id	2,00
0029	897169	SCREW, M4X10	1,00

SCRUB HEAD GROUP [70CM MODEL]

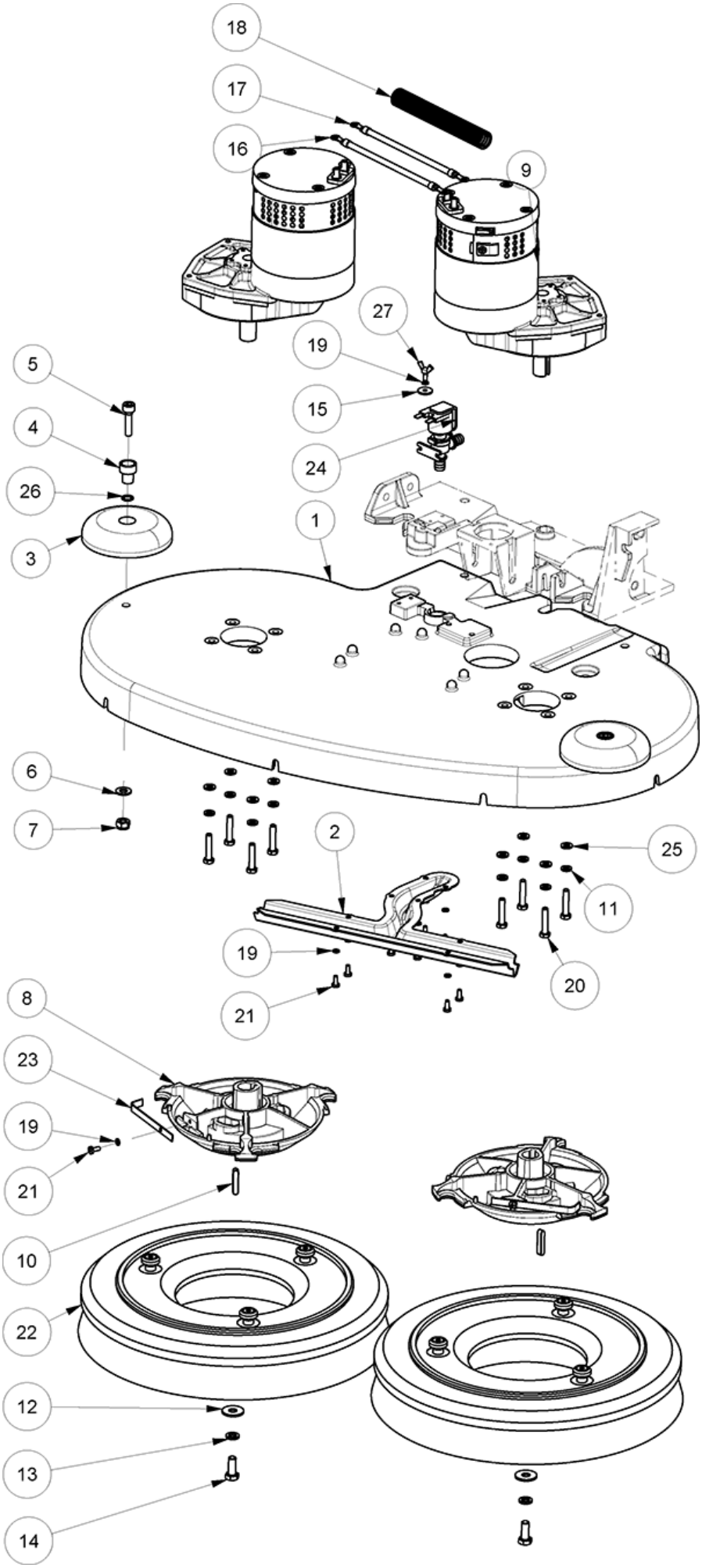

SCRUB HEAD GROUP [70CM MODEL]

Ref.	Part No.	Description	Quantity
0001	MFVR00239	BRUSH DECK ALUMINIUM	1,00
0002	MPVR06489	DISTRIBUTOR WATER CT51 BT70	1,00
0003	897101	WHEEL, BMPR, 98,5d X 21,5W	2,00
0004	897121	BUSHING NUOVO RUOTINO STRONG	2,00
0005	897122	SCREW, TCEI, M8X30	2,00
0006	897152	WASHER, D.8, UNI6592, INOX	2,00
0007	897124	NUT, M8, INOX	2,00
0008	MFVR00242	DRIVE DISK CONICAL ALUMINIUM	2,00
0009	MOCC00450	MOTOR BRUSH CT51-71 BT60-70	2,00
0009	MEVR02923	CARBON MOCC00449-MOCC00450	1,00
0010	VTVR16617	WEDGE 6X 6X30 UNI 6604	2,00
0011	897129	WASHER D. 6 INX GRW UNI 1751	8,00
0012	897120	WASHER, D.8X24, UNI6593, INOX	2,00
0013	897216	WASHER, D. 8, GRW, UNI1751, INOX	2,00
0014	897316	SCREW, TE, M8X20, UNI5739, INOX	2,00
0015	897149	WASHER 4-16 INOX A2	1,00
0016	MECB01014	CABLE 6,5mmq	1,00
0017	MECB02008	WIRING L320 RED W/TERMINALS	1,00
0018	MEVR01577	FAIR-LEAD CT90	1,00
0019	897204	WASHER D. 4 GROVER A2 UNI1751	10,00
0020	VTVT00433	SCREW 6X 30	8,00
0021	897313	SCREW, TCB, TC, M4X10	11,00
0022	9017816	BRUSH ASSY, DISK, SCB, 35CM, 3-LUG, PYP	2,00
0023	MLML00350	SPRING ALUM. CONICAL DRIVER	2,00
0024	9017718	VALVE, WATER, SOLENOID, 24VDC	1,00
0025	897106	WASHER D.6 UNI 6592 INOX	8,00
0026	897102	O-RING, 13.00 Od X 10.00 Id	2,00
0027	897169	SCREW, M4X10	1,00

ACTUATOR GROUP

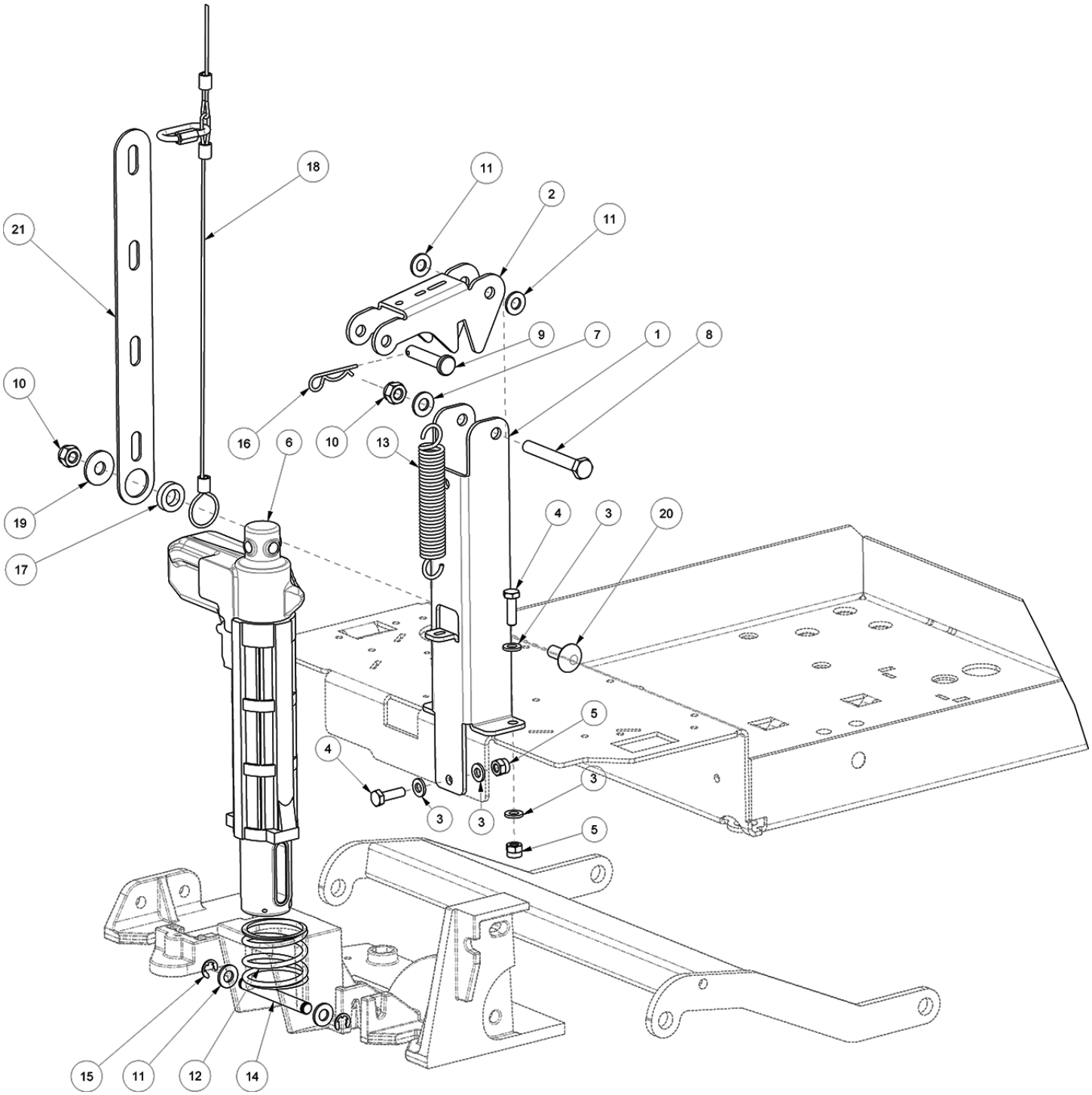

ACTUATOR GROUP

Ref.	Part N.	Description	Quantity
0001	LAFN09431	BRACKET -	1,00
0002	LAFN11042	LEVER -	1,00
0003	897106	WASHER D.6 UNI 6592 INOX	6,00
0004	897287	SCREW TE 6X20 UNI5739 INX	3,00
0005	897125	NUT, M6, INOX	3,00
0006	MOCC00448	ACTUATOR CT51-71 XP	1,00
0007	897152	WASHER, D.8, UNI6592, INOX	1,00
0008	897253	SCREW, M8X60	1,00
0009	VTVR00634	PIN 8X40X2	1,00
0010	VTDD01701	NUT M8	2,00
0011	897157	WASHER NYLON 66 D. 84X17X2	4,00
0012	MLML00349	SPRING -	1,00
0013	MLML00479	SPRING -	1,00
0014	LAFN11051	PIN ACTUATOR BRUSH HEAD CT51	1,00
0015	VTAE00013	SEEGER RADIALE UNI 7434 D.8	2,00
0016	VTVR47052	PIN, ACTUATOR, MOTOR	1,00
0017	LAFN11009	SPACER -	1,00
0018	CMCV00399	CABLE -	1,00
0019	897120	WASHER, D.8X24, UNI6593, INOX	1,00
0020	897217	SCREW	1,00
0021	MPVR11573	GUIDE CT51-71	1,00

VACUUM MOTOR GROUP

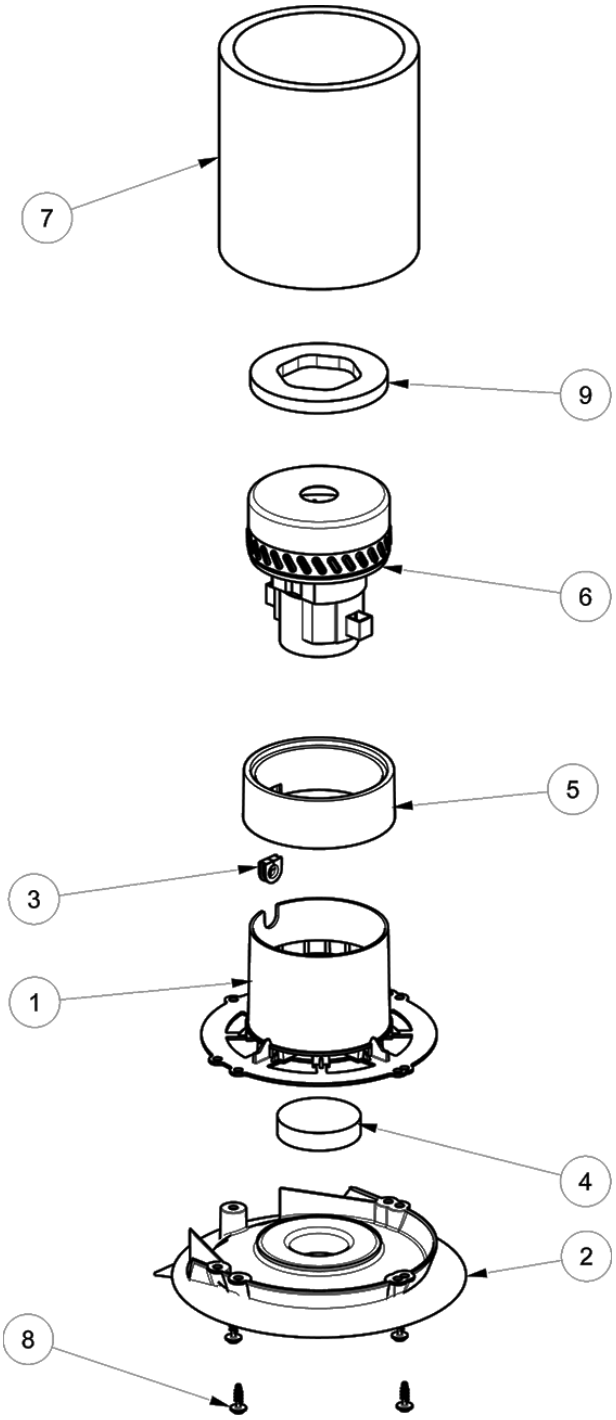

Ref.	Part No.	Description	Quantity	
0001	MPVR06466	SUPPORT VACUUM MOTOR 2 ST	1,00	
0002	MPVR06480	COVERING VACUUM MOTOR	1,00	
0003	897438	FAIRLEAD, 13,5D	1,00	
0004	897435	FILTER, FAN	1,00	04/07/2018
0005	897440	GASKET, RBR, FAN	1,00	
0006	9017716	FAN, VACUUM, 24VDC, 2 STAGE	1,00	
0006	9017687	CARBON BRUSH, MOTOR, VACFAN	1,00	
0007	ITSO00076	SOUND-PROOFING VAC. MOTOR EXTERNAL	1,00	
0008	VTVT01427	SCREW STS KN1038 8x25	4,00	
0009	GUGO00509	GASKET VACUUM MOTOR	1,00	

BATTERY CHARGER GROUP

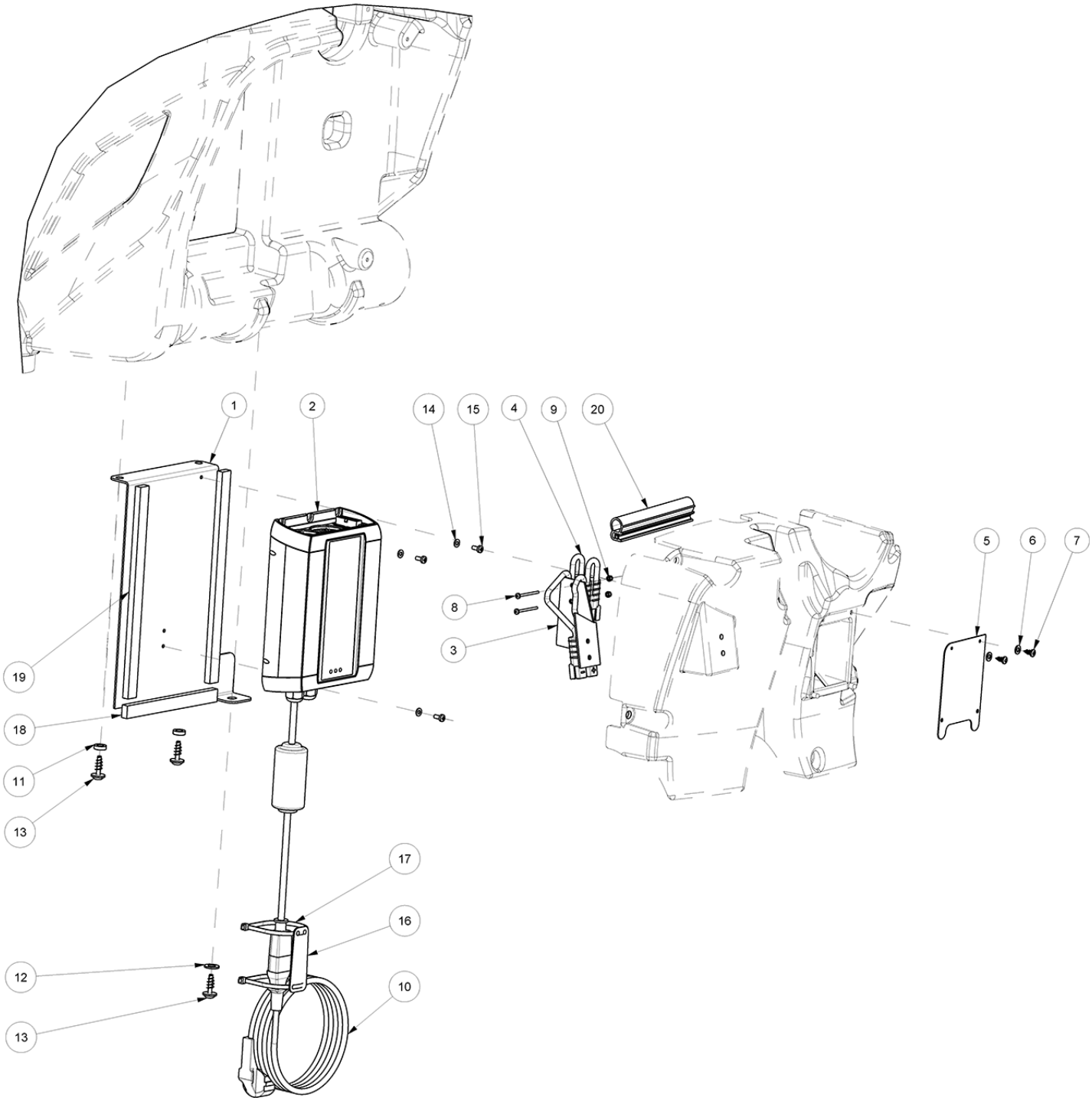

Ref.	Part No.	Description	Quantity
0001	LAFN08235	PLATE -	1,00
0002	BACA00190	BATTERY-CHARGER CBHD1-XR 24-15	1,00
0003	LAFN11046	BRACKET -	1,00
0004	MECB01964	WIRING CONNECTION CHARGER/BATT.	1,00
0005	MPVR10745	PROTECTION TRANSPARENT POWER CORD	1,00
0006	897166	WASHER, D. 5, INOX	2,00
0007	VTVT48694	SCREW TCB TC 5 X12 UNI 9707 TZ	2,00
0008	VTVT00691	SCREW M3 x 35 DIN 7985 A/2	2,00
0009	9018496	NUT M 3 AUTOBL.DIN 985 IX.A2	2,00
0010	MECB00922	CORD, POWER, CHRGR, 230VAC [EU]	1,00
0010	1032820	CORD, POWER, CHRGR, 230VAC [UK]	1,00
0011	VTRS00383	WASHER -	2,00
0012	897152	WASHER, D.8, UNI6592, INOX	1,00
0013	VTVT01430	SCREW STS KN1038 8x22 - T40 A2	3,00
0014	897156	WASHER D. 4 INX	3,00
0015	897313	SCREW, TCB, TC, M4X10	3,00
0016	MPVR11197	PLATE POWER CORD HOLDER	1,00
0017	FSVR00049	CLAMP 4,5x200 black	2,00
0018	GUGO00589	GASKET	1,00
0019	GUGO00590	GASKET	2,00
0020	GUVR00010	GASKET	0,12

SOLUTION TANK DRAIN HOSE GROUP

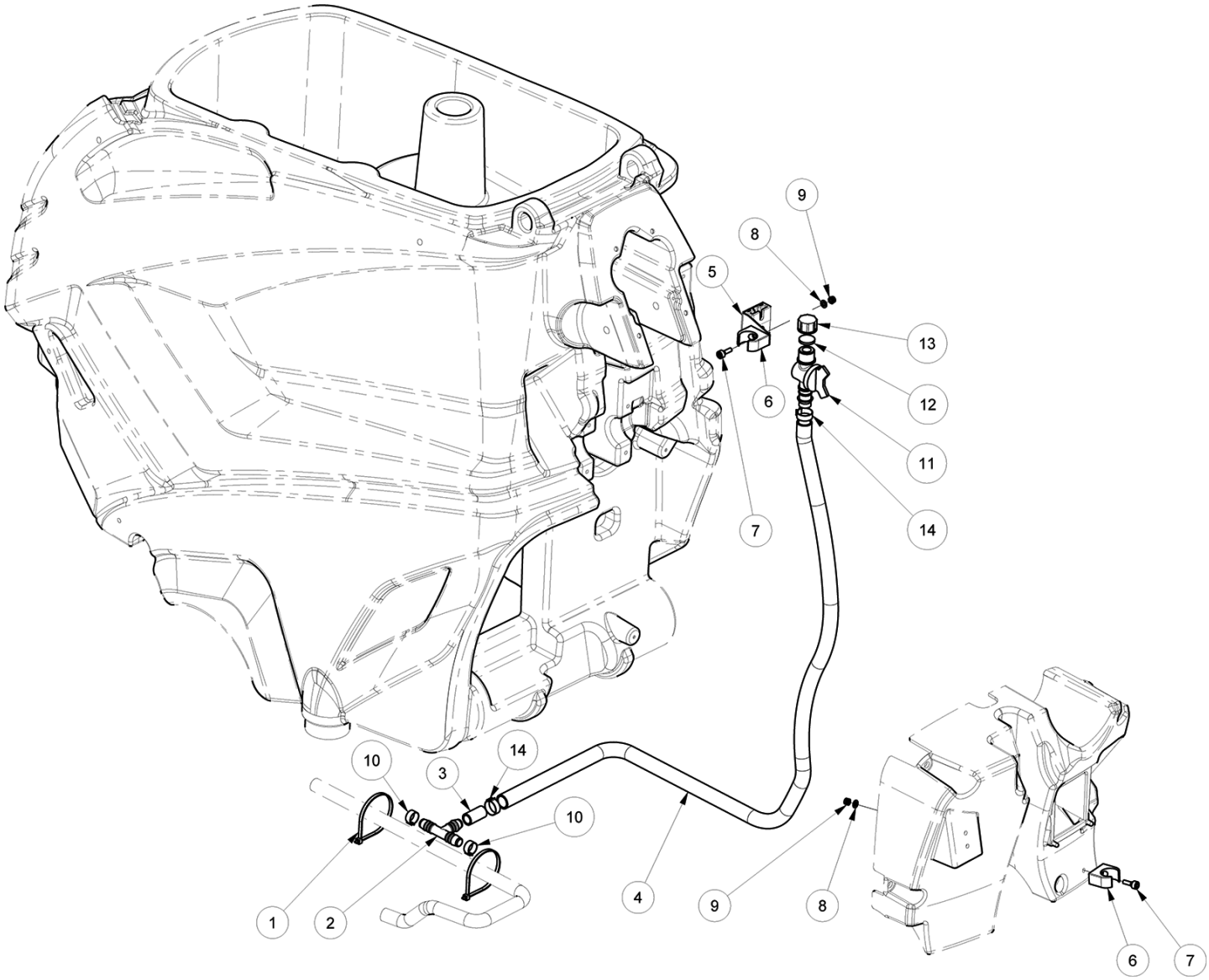

Ref.	Part No.	Description	Quantity
0001	FSVR00049	CLAMP 4,5x200 black	2,00
0002	897268	CONNECTOR 3 VIE	1,00
0003	897272	TUBE, D.30X12X17	1,00
0004	897656	HOSE, DRAIN, SOLTN	1,02
0005	LAFN11229	BRACKET LEVEL TUBE	1,00
0006	897266	CLIP, M25	2,00
0007	VTVT17720	SCREW TCEI M 5X16 INOX	2,00
0008	897166	WASHER, D. 5, INOX	2,00
0009	VTDD01693	NUT, M5, INOX	2,00
0010	897257	CLAMP	2,00
0011	897271	CONNECTOR 1/2 M RESCA 15	1,00
0012	897270	GASKET D.21 SP.3 GOMMA	1,00
0013	897269	CAP 1/2"G X ELETTROV. ACL	1,00
0014	897273	CLAMP	2,00

RECOVERY TANK LID

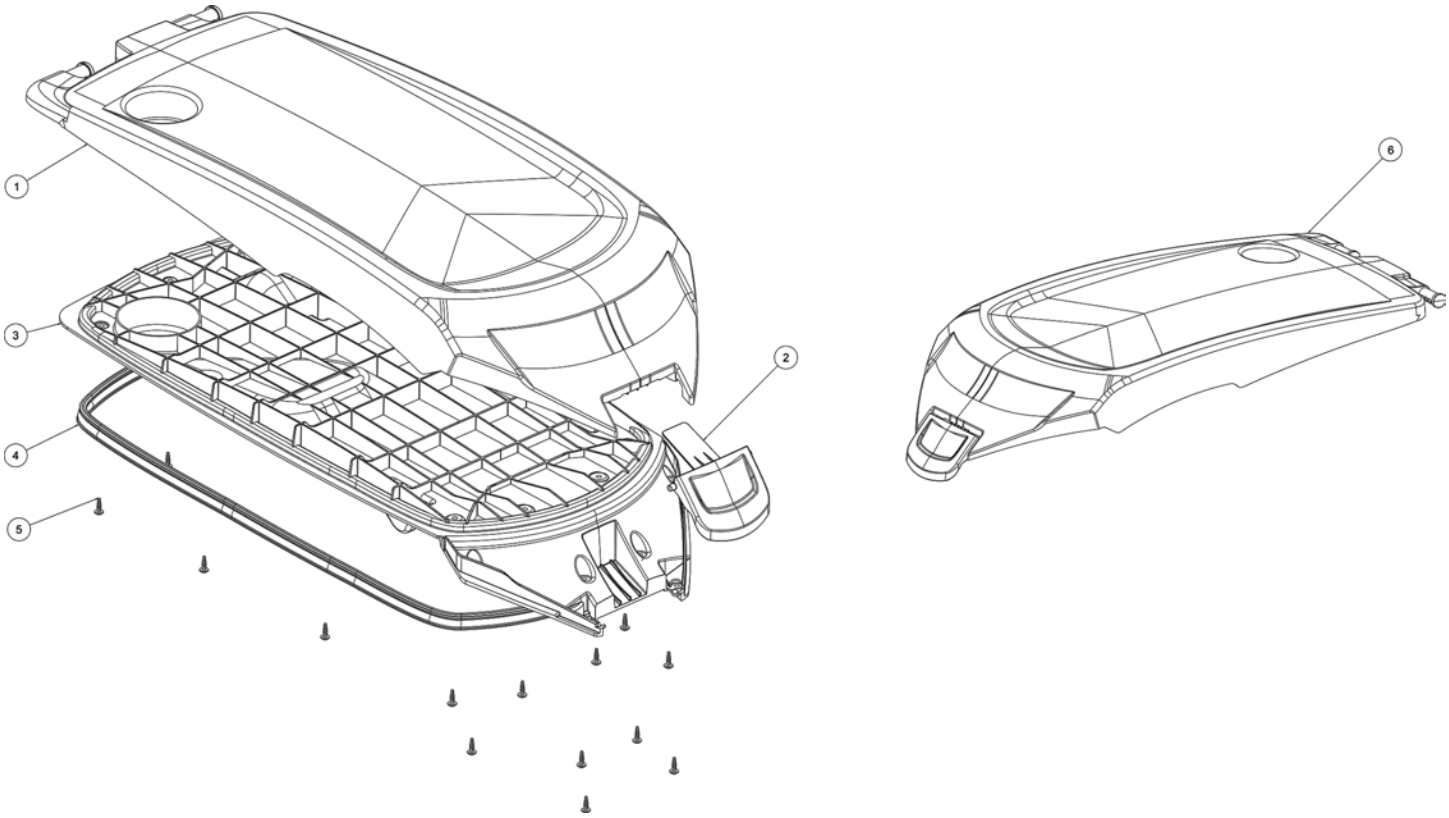

Ref.	Part No.	Description	Quantity
0001	MPVR13035	COVER RECOVERY TANK RAL7024	1,00
0002	MPVR12967	LEVER	1,00
0003	MPVR13047	COVER RAL7024	1,00
0004	GUVR01019	GASKET RECOVERY TANK LID	1,00
0005	VTVT01072	SCREW STS KN1038 5x16 - T20 A2	17,00
0006	KTRI06346	COVER ASSY, RECOVERY TANK (Includes 1,2,3,4,5 Pre-assembed)	1,00

TANK COMPONENT GROUP

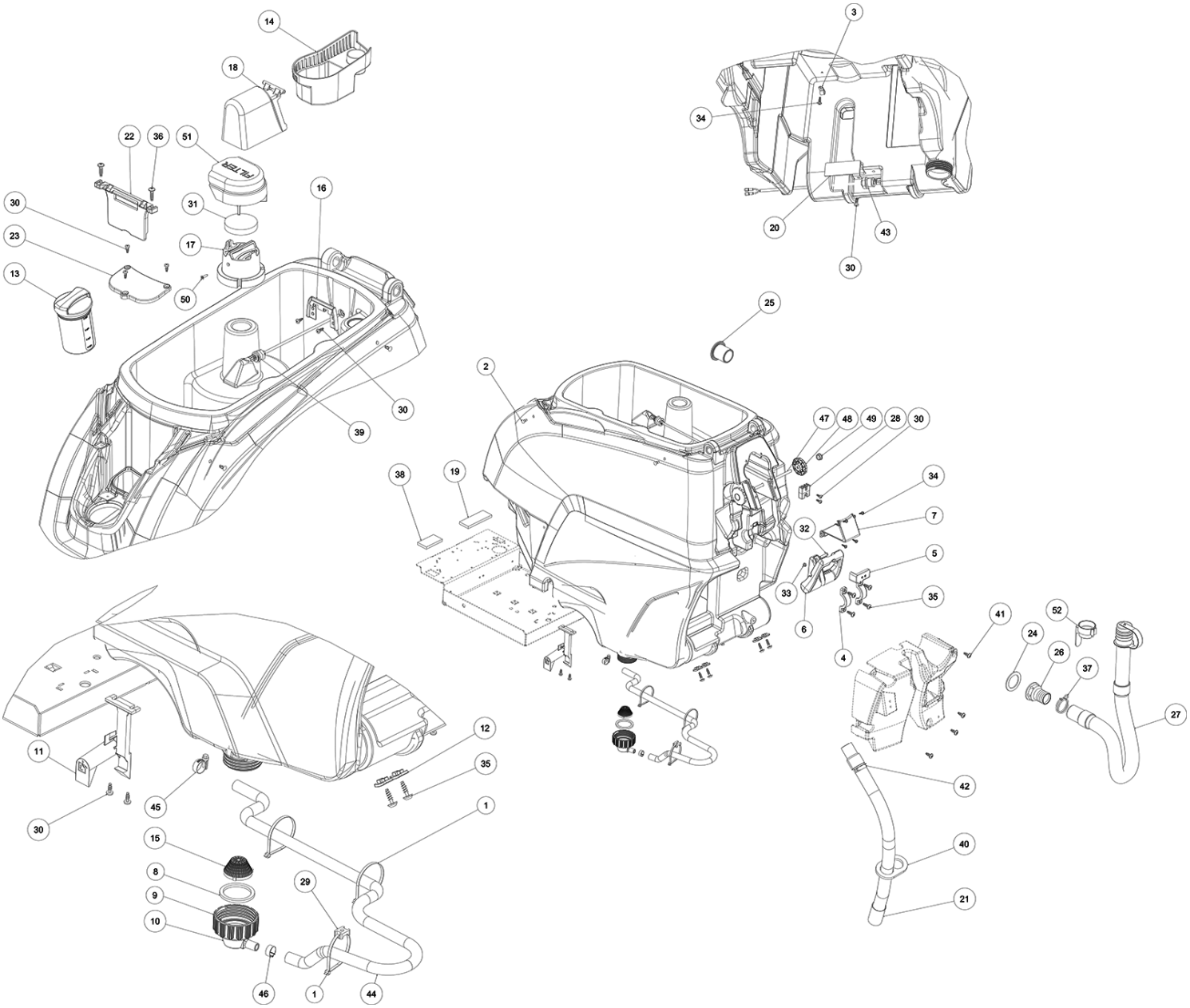

TANK COMPONENT GROUP

Ref.	Part No.	Description	Quantity
0001	FSVR00049	CLAMP 4,5x200 black	3,00
0002	MPVR11355	CLIP	2,00
0003	897334	DUCT LOCK D.9,5	1,00
0004	MPVR06470	PLATE -	1,00
0005	MPVR10564	SUPPORT -	1,00
0006	MPVR13036	HANDLE RAL7024	1,00
0007	MPVR10571	FLANGE -	1,00
0008	GUGO00478	GASKET SOLUTION FILTER	1,00
0009	MPVR06561	CAP SOLUTION TANK	1,00
0010	MPVR10566	HOSE FITTING SOLUTION FILTER	1,00
0011	MPVR06475	LEVER TANK LOCKING	1,00
0012	MPVR10562	SLIDE -	4,00
0013	897463	CAP, SOLTN, TANK	1,00
0014	MPVR06490	FILTER DEBRIS COLLECTOR	1,00
0015	MPVR10565	FILTER SOLUTION TANK	1,00
0016	MPVR10576	SUPPORT -	1,00
0017	MPVR11676	SUPPORT FILTER	1,00
0018	MPVR06560	PROTECTION	1,00
0019	MPVR11766	THICKNESS 110X40X8,5	1,00
0020	LAFN11043	BRACKET -	1,00
0021	9017712	HOSE ASSY, RECOVERY (includes item 42)	1,00
0022	MPVR13045	SUPPORT RAL5021	1,00
0023	MPVR13046	COVER RAL5021	1,00
0024	GUGO00216	GASKET TANK DRAIN HOSE CUFF	1,00
0025	RCVR00339	CONNECTOR RIF.220.060	1,00
0026	RCVR01103	CONNECTOR 1"1/2F d.45	1,00
0027	TBFX01069	TUBE DRAIN RECOVERY TANK	1,00
0028	MPVR11684	JOINT TUBO	1,00
0029	MPVR10765	SUPPORT FOR CLAMP	1,00
0030	VTVT01073	SCREW STS KN1039 6x16 - T25 A2	10,00
0031	FTDP00678	FILTER VACUUM MOTOR	1,00
0032	VTVT01714	SCREW TBEI 6X30	1,00
0033	897138	NUT M6 INOX	1,00
0034	VTVT01072	SCREW STS KN1038 5x16 - T20 A2	5,00
0035	VTVT01427	SCREW STS KN1038 8x25 - T40 A2	8,00
0036	VTVT01429	SCREW STS KN1038 8x30 - T40 A2	2,00
0037	FSVR00262	CLAMP	1,00
0038	MPVR11767	THICKNESS 75X40X8,5	1,00
0039	MECI00662	SENSOR LEVEL	1,00
0040	MPVR04659	SUCTION HOSE FLANGE	1,00
0041	VTVT01430	SCREW STS KN1038 8x22 - T40 A2	4,00
0042	MPVR06119	CLAMP INDICATION , YELLOW	1,00
0043	MECI00592	SENSOR SOLUTION TANK	1,00
0044	897256	TUBE FLEX D.12X3 ARMORV.PVC TR	1,00
0045	897362	CLAMP, HOSE, WORMDRIVE, 12- 20D	1,00
0046	897257	CLAMP	1,00
0047	VTVR01001	BAR	1,00
0048	MPVR06478	SMALL KNOB WHEEL ADJUSTMENT	2,00
0049	MPVR06479	CAP POMELLO	2,00
0050	VTVT00835	SCREW 4.5-20 DIN 7505-A INOX	1,00
0051	MPVR11641	COVERING FILTER	1,00
0052	MPVR01097	HOOK DRAIN HOSE	1,00

ELECTRICAL COMPONENT GROUP [PAD ASSIST MODEL]

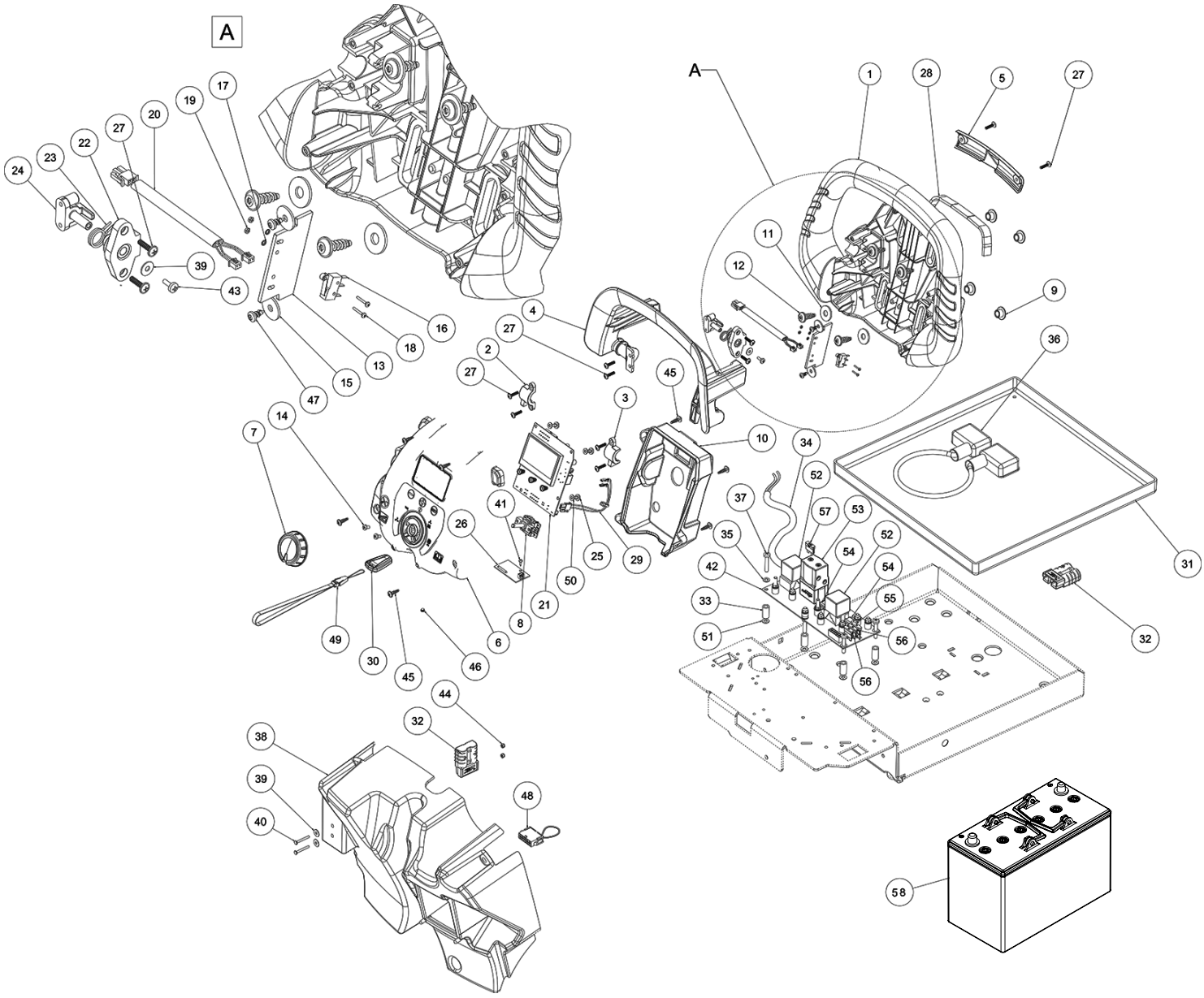

ELECTRICAL COMPONENT GROUP [PAD ASSIST MODEL]

Ref.	Part No.	Description	Quantity
0001	MPVR13039	BOARD RAL7024	1,00
0002	MPVR06528	SUPPORT -	1,00
0003	MPVR07177	SUPPORT -	1,00
0004	MPVR06526	LEVER DIRECTION	1,00
0005	MPVR13040	CAP RAL7024	1,00
0006	MPVR13041	BOARD RAL7024	1,00
0007	MPVR13038	SMALL KNOB BLACK	1,00
0008	MECI00587	SELECTOR DIALER SWITCH	1,00
0009	LAFN10998	BUSHING -	4,00
0010	MPVR11640	COVERING	1,00
0011	897120	WASHER, D.8X24, UNI6593, INOX	4,00
0012	VTVT01427	SCREW STS KN1038 8x25 - T40 A2	4,00
0013	MPVR11198	SPACER CT51/71	1,00
0014	897140	SCREW, M4X8, TCB, TC, UNI8112	2,00
0015	VTRS00291	WASHER, FLAT, 5 X 20	2,00
0016	MECI00588	MICROSWITCH	1,00
0017	VTRS00581	WASHER D.2	2,00
0018	VTVT01592	SCREW TC 2X12	2,00
0019	VTDD00213	NUT M2	2,00
0020	MECB01951	WIRING CT51	1,00
0021	MECE00746	BOARD DISPLAY	1,00
0022	MPVR07184	BRACKET -	1,00
0023	MLML00352	SPRING -	1,00
0024	MPVR07185	BRACKET -	1,00
0025	897574	SCREW SELF TAPPING 4.8X9.5 SUS	4,00
0026	MECE00749	BOARD REED	1,00
0027	897669	SCREW STS KN1031-Neu 4x16 - H2	10,00
0028	MPVR10772	GASKET	1,00
0029	MECB02018	WIRING	1,00
0030	MEVR02641	KEY ELECTRONIC	2,00
0031	897207	BATTERY SUPPORT CT LINE	1,00
0032	897298	PLUG M CB50 A 600V RD.	1,00
0033	MPVR06501	SPACER	6,00
0034	MECB01928	WIRING	1,00
0035	897166	WASHER, D. 5, INOX	6,00
0036	897205	WIRING BATTERY BRIDGE W/TERMINAL	1,00
0037	VTVT01440	SCREW	6,00
0038	MPVR13037	COVER RAL7024	1,00
0039	VTRS00017	WASHER STEEL INOX 4X12	3,00
0040	VTVT00021	SCREW TE UNI 5739 3X25 ZB	2,00
0041	VTVT00522	SCREW TCB-TC 2.9X 9.5 UNI6954	1,00
0042	MECE00733	PCB RELAY	1,00
0043	897180	SCREW, M4X10, TCB, TC, INOX	1,00
0044	9018496	NUT M 3 AUTOBL.DIN 985 IX.A2	2,00
0045	VTVT01072	SCREW STS KN1038 5x16 - T20 A2	7,00
0046	MPVR10701	RUBBER KEY HOLD CT51	1,00
0047	VTVT48694	SCREW TCB TC 5 X12 UNI 9707 TZ	2,00
0048	MECB01981	WIRING BRIDGE CT51 W/O CHARGER	1,00
0049	MPVR11496	CORD, KEY	1,00
0050	VTRS00570	WASHER -	4,00
0051	VTRS00596	WASHER -	6,00
0052	897209	RELAY 24V 70A	2,00
0053	897208	CONTACTOR 100A	1,00
0054	9018332	FUSE, 50A	2,00
0055	MEVR01132	FUSE A LAMA 5 A.	1,00
0056	MEVR01428	FUSE 2A	2,00
0057	897510	FUSE 30A	1,00
0058	994200	BATTERY, GEL, 12VDC 76AH [GEL]	2,00
0058	994201	BATTERY, GEL, 12VDC 105AH [GEL]	2,00

ELECTRICAL COMPONENT GROUP [PROPEL MODEL]

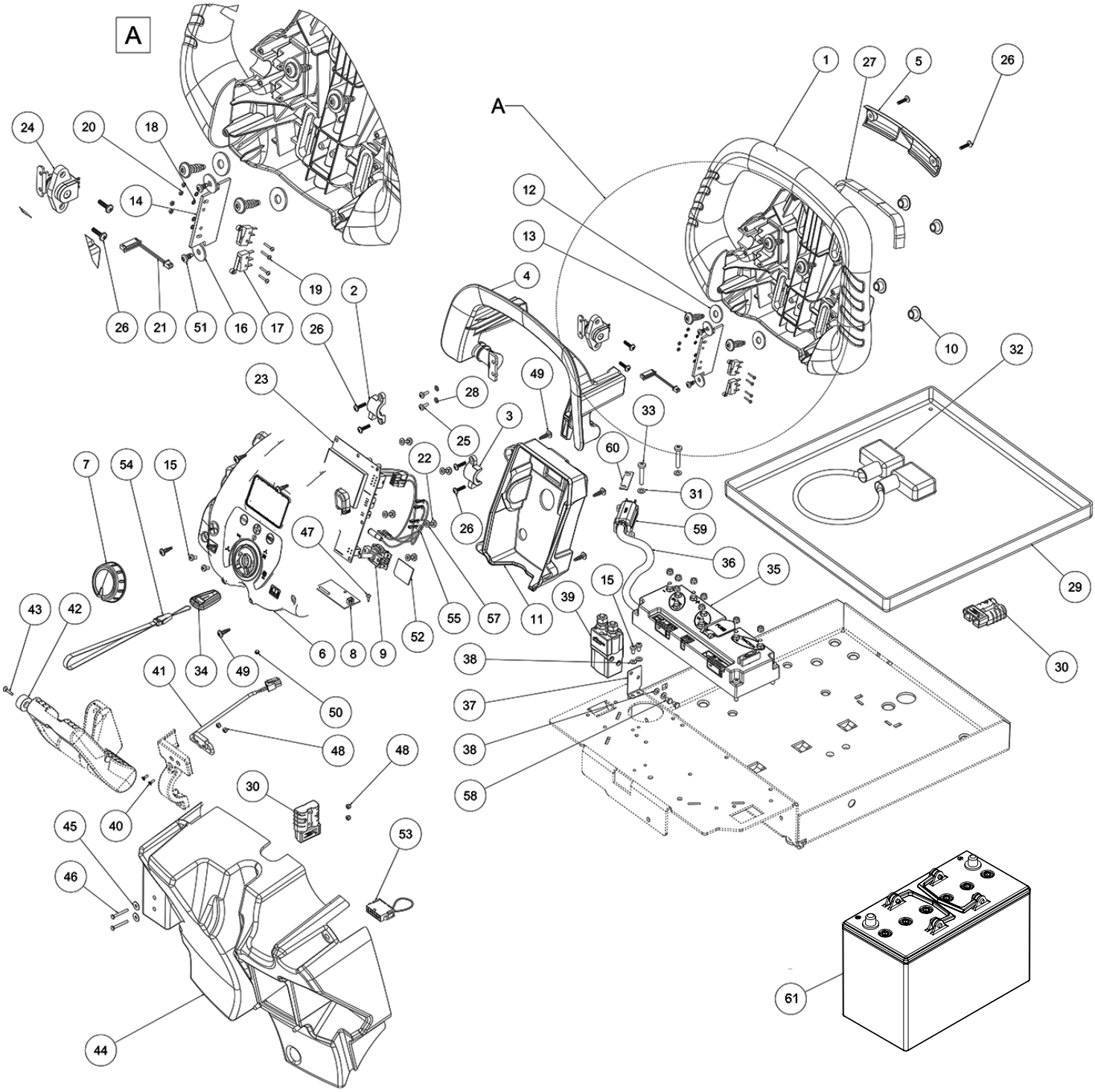

ELECTRICAL COMPONENT GROUP [PROPEL MODEL]

Ref.	Part NO.	Description	Quantity
0001	MPVR13039	BOARD RAL7024	1,00
0002	MPVR06528	SUPPORT -	1,00
0003	MPVR07177	SUPPORT -	1,00
0004	MPVR06526	LEVER DIRECTION	1,00
0005	MPVR13040	CAP RAL7024	1,00
0006	MPVR13041	BOARD RAL7024	1,00
0007	MPVR13038	SMALL KNOB BLACK	1,00
0008	MECE00804	BOARD KEY READER	1,00
0009	MECI00587	SELECTOR DIALER SWITCH	1,00
0010	LAFN10998	BUSHING -	4,00
0011	MPVR11640	COVERING CT51	1,00
0012	897120	WASHER, D.8X24, UNI6593, INOX	4,00
0013	VTVT01427	SCREW STS KN1038 8x25 - T40 A2	4,00
0014	MPVR11198	SPACER CT51/71	1,00
0015	897140	SCREW, M4X8, TCB, TC, UNI8112	4,00
0016	VTRS00291	WASHER, FLAT, 5 X 20	2,00
0017	MECI00588	MICROSWITCH	2,00
0018	VTRS00581	WASHER D.2	4,00
0019	VTVT01592	SCREW TC 2X12	4,00
0020	VTDD00213	NUT M2	4,00
0021	MECB02058	WIRING CONNECTION REED	1,00
0022	897574	SCREW SELF TAPPING 4.8X9.5 SUS	5,00
0023	MECE00810	BOARD DISPLAY	1,00
0024	MEVR02389	POTENTIOMETER WIG-WAG 45° CT51	1,00
0025	897180	SCREW, M4X10, TCB, TC, INOX	2,00
0026	897669	SCREW STS KN1031-Neu 4x16 - H2	8,00
0027	MPVR10772	GASKET	1,00
0028	897204	WASHER D. 4 GROVER A2 UNI1751	2,00
0029	897207	BATTERY SUPPORT CT LINE	1,00
0030	897298	PLUG M CB50 A 600V RD.	1,00
0031	897166	WASHER, D. 5, INOX	4,00
0032	897205	WIRING BATTERY BRIDGE W/TERMINAL	1,00
0033	VTVT01440	SCREW	4,00
0034	MEVR02642	KEY COMPLETE WITH RFID	2,00
0035	MECE00786	BOARD TRACTION COMPLETE	1,00
0036	MECB01919	WIRING MAIN HARNESS	1,00
0037	LAFN11075	BRACKET -	1,00
0038	897156	WASHER D. 4 INX	4,00
0039	897208	CONTACTOR 100A	1,00
0040	9018497	BOLT, STRAP, SQGE	2,00
0041	MECI00626	SENSOR SQUEEGEE POSIT.	1,00
0042	MEVR02381	MAGNET SQUEEGEE LEVER	1,00
0043	VTVT17357	SCREW TSP-TC 3.9X16 UNI6955	1,00
0044	MPVR13037	COVER RAL7024	1,00
0045	VTRS00017	WASHER STEEL INOX 4X12	2,00
0046	VTVT00021	SCREW TE UNI 5739 3X25 ZB	2,00
0047	VTVT00522	SCREW TCB-TC 2.9X 9.5 UNI6954	1,00
0048	9018496	NUT M 3 AUTOBL.DIN 985 IX.A2	4,00
0049	VTVT01072	SCREW STS KN1038 5x16 - T20 A2	4,00
0050	MPVR10701	RUBBER KEY HOLD	1,00
0051	VTVT48694	SCREW TCB TC 5 X12 UNI 9707 TZ	2,00
0052	897514	CARD, SD	1,00
0053	MECB01981	WIRING BRIDGE CT51 W/O CHARGER	1,00
0054	MPVR11496	CORD, KEY	1,00
0055	MECB02017	WIRING	1,00
0056	VTDD01693	NUT, M5, INOX	8,00
0057	VTRS00570	WASHER -	5,00
0058	VTVT01669	SCREW M4x6 UNI5739 znt cl.4.8	2,00
0059	MEVR02907	FUSE-HOLDER -	1,00
0060	MEVR00604	FUSE	1,00
0061	994200	BATTERY, GEL, 12VDC 76AH [GEL]	2,00
0061	994201	BATTERY, GEL, 12VDC 105AH [GEL]	2,00

WHEEL FRAME GROUP [PROPEL MODEL]

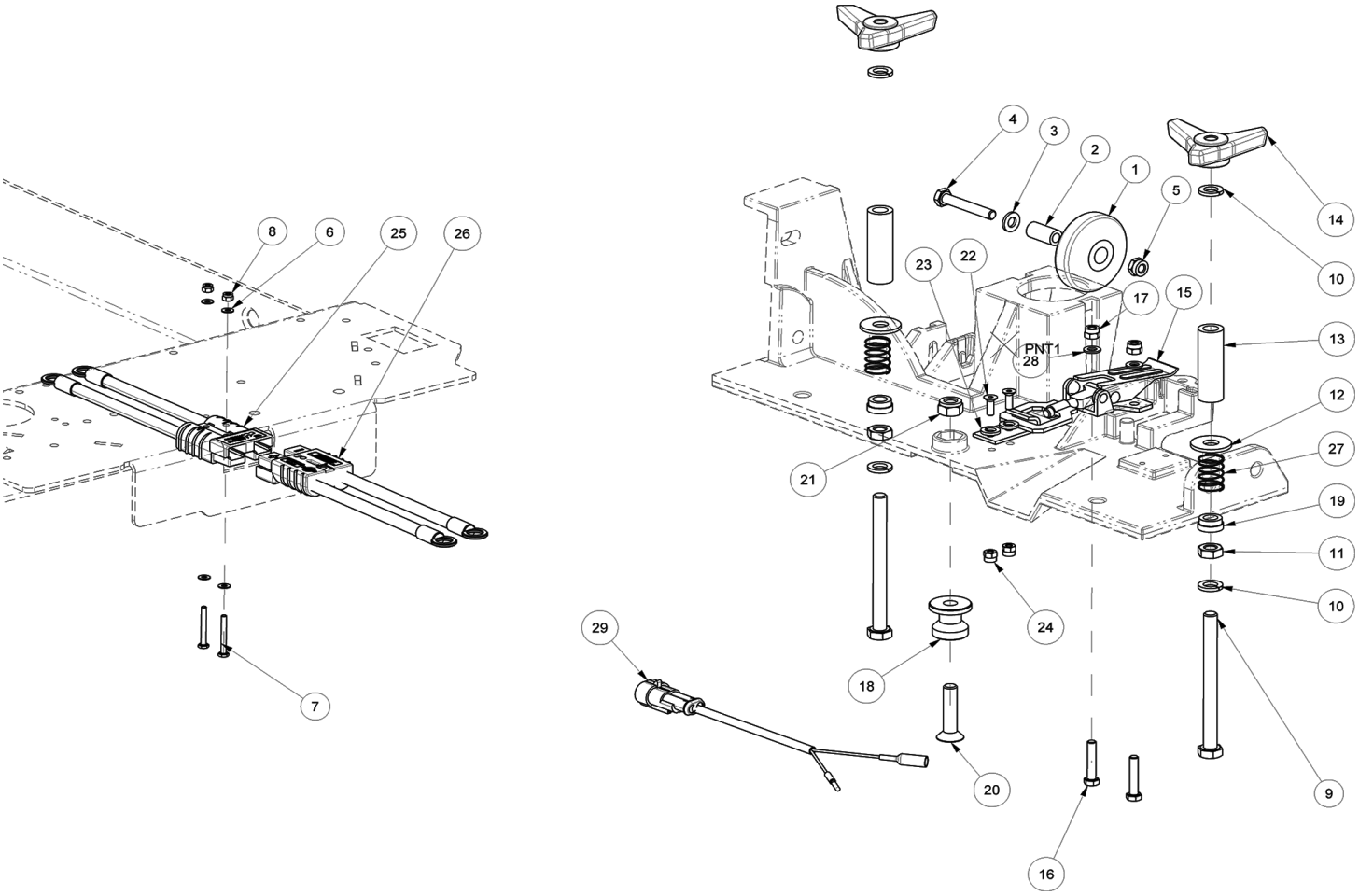

Ref.	Part No.	Description	Quantity
0001	RTRT00576	WHEEL D.50X17 - HOLE 10.5	1,00
0002	MPVR06501	SPACER	1,00
0003	897106	WASHER D.6 UNI 6592 INOX	1,00
0004	VTVT15145	SCREW TE 6X40 UNI5739 INX	1,00
0005	897138	NUT M6 INOX	1,00
0006	897193	WASHER, D. 3, INOX	4,00
0007	VTVT00021	SCREW TE UNI 5739 3X25 ZB	2,00
0008	9018496	NUT M 3 AUTOBL.DIN 985 IX.A2	2,00
0009	VTVT01321	SCREW TE 8X90 UNI5739	2,00
0010	897216	WASHER, D. 8, GRW, UNI1751, INOX	4,00
0011	VTDD00057	NUT UNI 5589 M8 BASSO ZB	2,00
0012	897120	WASHER, D.8X24, UNI6593, INOX	2,00
0013	LAFN11002	SPACER -	2,00
0014	MPVR04164	YELLOW KNOB	2,00
0015	LAFN09418	HOOK BRUSH HEAD CT51	1,00
0016	VTVT00766	SCREW TE M. 5-25	2,00
0017	VTDD15517	NUT M 5 INX	2,00
0018	LAFN09419	PIN -	1,00
0019	LAFN11089	SPACER -	2,00
0020	VTVT00427	SCREW TSPEI 8X35 UNI5933 INX	1,00
0021	VTDD01701	NUT M8	1,00
0022	VTVT00474	SCREW TSCE uni 5933 4x12 ZB	2,00
0023	897129	WASHER D. 6 INX GRW UNI 1751	2,00
0024	897160	NUT, M4, INOX, ZN	2,00
0025	MECB01947	WIRING BOARD BRUSH HEAD CT51-71	1,00
0026	MECB01946	WIRING BRUSH HEAD MOTORS CT51-71	1,00
0027	MLML00348	SPRING -	2,00
0028	897166	WASHER, D. 5, INOX	2,00
0029	MECB02024	WIRING BRUSH MOTOR THERMAL CON.	1,00

CONTROL BOARD, MECE00786 [PROPEL MODEL]

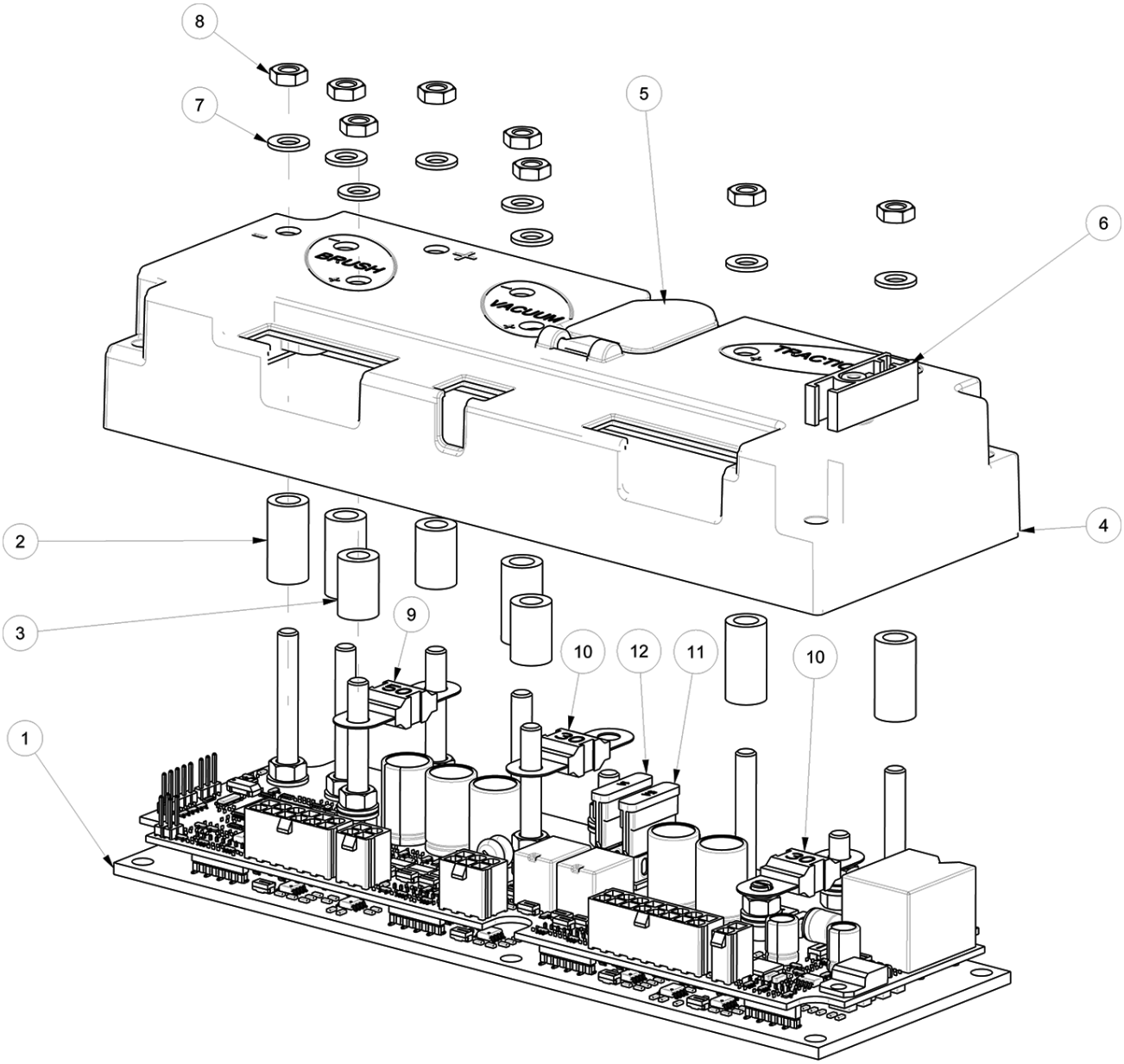

Ref.	Part No.	Description	Quantity
0001	MECE00812	BOARD TRACTION RULLI	1,00
0002	MPVR06501	SPACER	5,00
0003	LAFN01298	SPACER PLASTIC 10X5,5X15	3,00
0004	MPVR11447	COVERING ELECTRONIC BOARD	1,00
0005	MPVR11448	COVER PLASTIC FUSE BOX	1,00
0006	MEVR01153	FUSE EXTRACTOR	1,00
0007	897166	WASHER, D. 5, INOX	8,00
0008	VTDD00209	NUT M5 LOW UNI5589	8,00
0009	9018332	FUSE, 50A	1,00
0010	897301	FUSE 30A OMEGA FT3030	2,00
0011	9017817	FUSE, 005A	1,00
0012	MEVR00563	FUSE 1A	1,00

SQUEEGEE GROUP [55CM & 60CM MODEL]

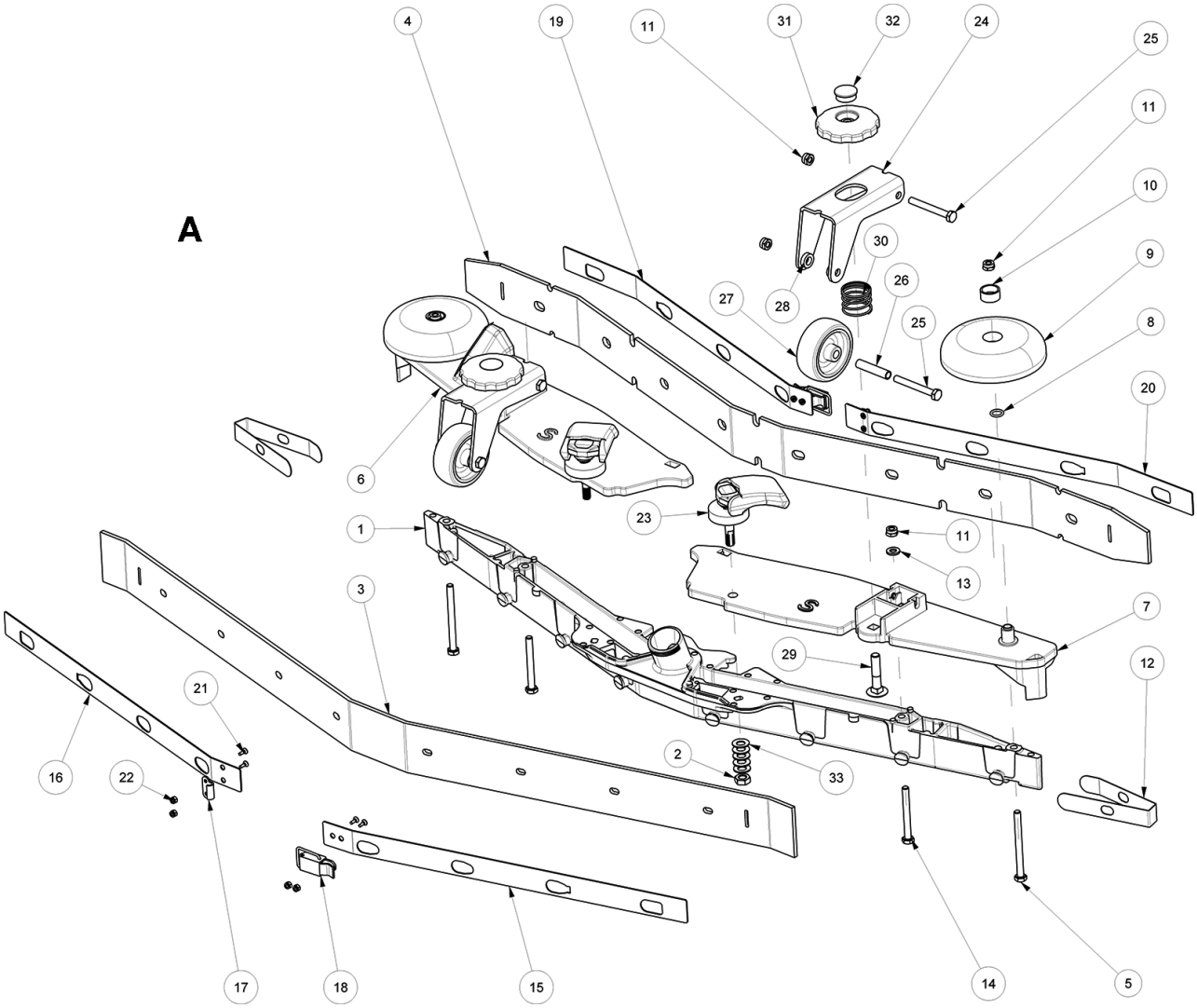

Ref.	Part No.	Description	Quantity
A	PMVR06825	SQUEEGEE ASSEMBLY [T291/T391 55-60CM]	1,00
0001	MFVR00319	FRAME SQUEEGEE S-SIZE	1,00
0002	VTDD00530	NUT M8 UNI 5589	2,00
0003	9017702	BLADE, SQGE, REAR, 900L, LINATEX (STANDARD)	1,00
0004	9017699	BLADE, SQGE, FRONT, 880L, LINATEX (STANDARD)	1,00
0003	9017694	BLADE, SQGE, REAR, 900L, LATEX (OPTION)	1,00
0004	9017695	BLADE, SQGE, FRONT, 880L, LATEX (OPTION)	1,00
0003	9017698	BLADE, SQGE, REAR, 900L, PYU (OPTION)	1,00
0004	9017696	BLADE, SQGE, FRONT, 880L, PYU (OPTION)	1,00
0005	VTVT00699	SCREW TE M. 6-70	2,00
0006	MPVR06491	PLATE -	1,00
0007	MPVR06492	PLATE -	1,00
0008	897102	O-RING, 13.00 Od X 10.00 Id	2,00
0009	897101	WHEEL, BMPR, 98,5d X 21,5W	2,00
0010	897100	SLEEVE, NYLON, 0,314b 0,72d 0,35l	2,00
0011	897138	NUT M6 INOX	8,00
0012	897116	CLOSURE S	2,00
0013	897106	WASHER D.6 UNI 6592 INOX	2,00
0014	897422	SCREW, TE, M.6X55	2,00
0015	9018493	STRAP, SQGE	1,00
0016	9018494	STRAP, SQGE	1,00
0017	9018495	HOOK, STRAP, SQGE	2,00
0018	9018492	LATCH, STRAP, SQGE	2,00
0019	897561	STRAP, SQGE, S, REAR, RH	1,00
0020	897110	BLADE HOLDER S SIZE ANT. RIGHT	1,00
0021	9018497	BOLT, STRAP, SQGE	8,00
0022	9018496	NUT M 3 AUTOBL.DIN 985 IX.A2	8,00
0023	PMVR06995	HOOKING SQUEEGEE CT51-71	2,00
0024	LAFN09471	SUPPORT CASTOR WHEEL NEW	2,00
0025	897115	SCREW, M6X55, SS	4,00
0026	LAFN07534	SPACER 6x8 h37,5	2,00
0027	9018501	WHEEL, 59,2D 22W 8,4B, GRAY	2,00
0028	VTRS00383	WASHER -	4,00
0029	VTVT01304	SCREW 8X 40	2,00
0030	MLML00473	SPRING -	2,00
0031	MPVR06478	SMALL KNOB WHEEL ADJUSTMENT	2,00
0032	MPVR06479	CAP POMELLO	2,00
0033	MLML00493	DISC SPRINGS 16x8,2x0,9 DIN 2093	10,00

SQUEEGEE GROUP [70CM MODEL]

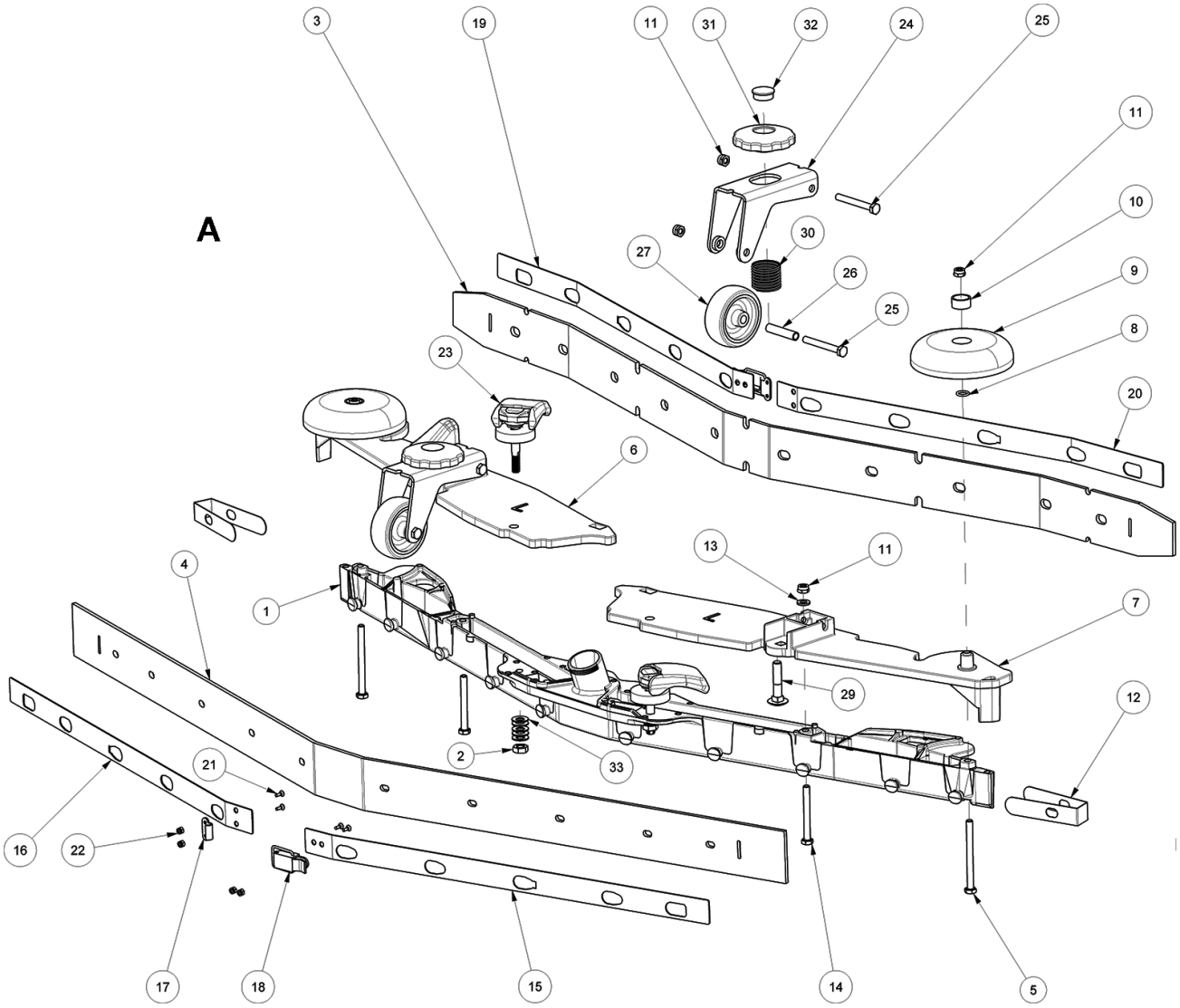

Ref.	Part No.	Description	Quantity	
A	PMVR06826	SQUEEGEE ASSY [T291/T391 70CM]	1,00	
0001	MFVR00318	BODY -	1,00	
0002	VTDD00530	NUT M8 UNI 5589	2,00	
0003	9017813	BLADE, SQGE, FRONT, 1020L, LINATEX (STANDARD)	1,00	
0004	9017814	BLADE, SQGE, REAR, 1020L, LINATEX (STANDARD)	1,00	
0003	9017801	BLADE, SQGE, FRONT, 1020L, LATEX	1,00	
0004	9017804	BLADE, SQGE, REAR, 1020L, LINATEX	1,00	
0003	9017806	BLADE, SQGE, FRONT, 1020L, PYU	1,00	
0004	9017811	BLADE, SQGE, REAR, 1020L, PYU	1,00	
0005	VTVT00699	SCREW TE M. 6-70	2,00	
0006	MPVR06493	PLATE PROTECTION SQUEEGEE L LH	1,00	
0007	MPVR06494	PLATE PROTECTION SQUEEGEE L RH	1,00	
0008	897102	O-RING, 13.00 Od X 10.00 Id	2,00	
0009	897101	WHEEL, BMPR, 98,5d X 21,5W	2,00	
0010	897100	SLEEVE, NYLON, 0,314b 0,72d 0,35l	2,00	
0011	897138	NUT M6 INOX	8,00	
0012	897307	CLOSURE L	2,00	
0013	897106	WASHER D.6 UNI 6592 INOX	2,00	
0014	897422	SCREW, TE, M.6X55	2,00	
0015	897654	STRAP, SQGE, L, REAR, LH	1,00	
0016	897654	STRAP, SQGE, L, REAR, LH	1,00	
0017	9018495	HOOK, STRAP, SQGE	2,00	
0018	9018492	LATCH, STRAP, SQGE	2,00	
0019	897620	STRAP, SQGE, L, FRONT, LH	1,00	
0020	897613	STRAP, SQGE, L, FRONT, RH	1,00	
0021	9018497	BOLT, STRAP, SQGE	8,00	
0022	9018496	NUT M 3 AUTOBL.DIN 985 IX.A2	8,00	
0023	PMVR06995	HOOKING SQUEEGEE CT51-71	2,00	
0024	LAFN09471	SUPPORT CASTOR WHEEL NEW	2,00	
0025	897115	SCREW, M6X55, SS	4,00	
0026	LAFN07534	SPACER 6x8 h37,5	2,00	
0027	9018501	WHEEL, 59,2D 22W 8,4B, GRAY	2,00	
0028	VTRS00383	WASHER -	4,00	
0029	VTVT01304	SCREW 8X 40	2,00	
0030	MLML00473	SPRING -	2,00	
0031	MPVR06478	SMALL KNOB WHEEL ADJUSTMENT	2,00	
0032	MPVR06479	CAP POMELLO	2,00	
0033	MLML00493	DISC SPRINGS 16x8,2x0,9 DIN 2093	10,00	14/12/2017

TANK GROUP

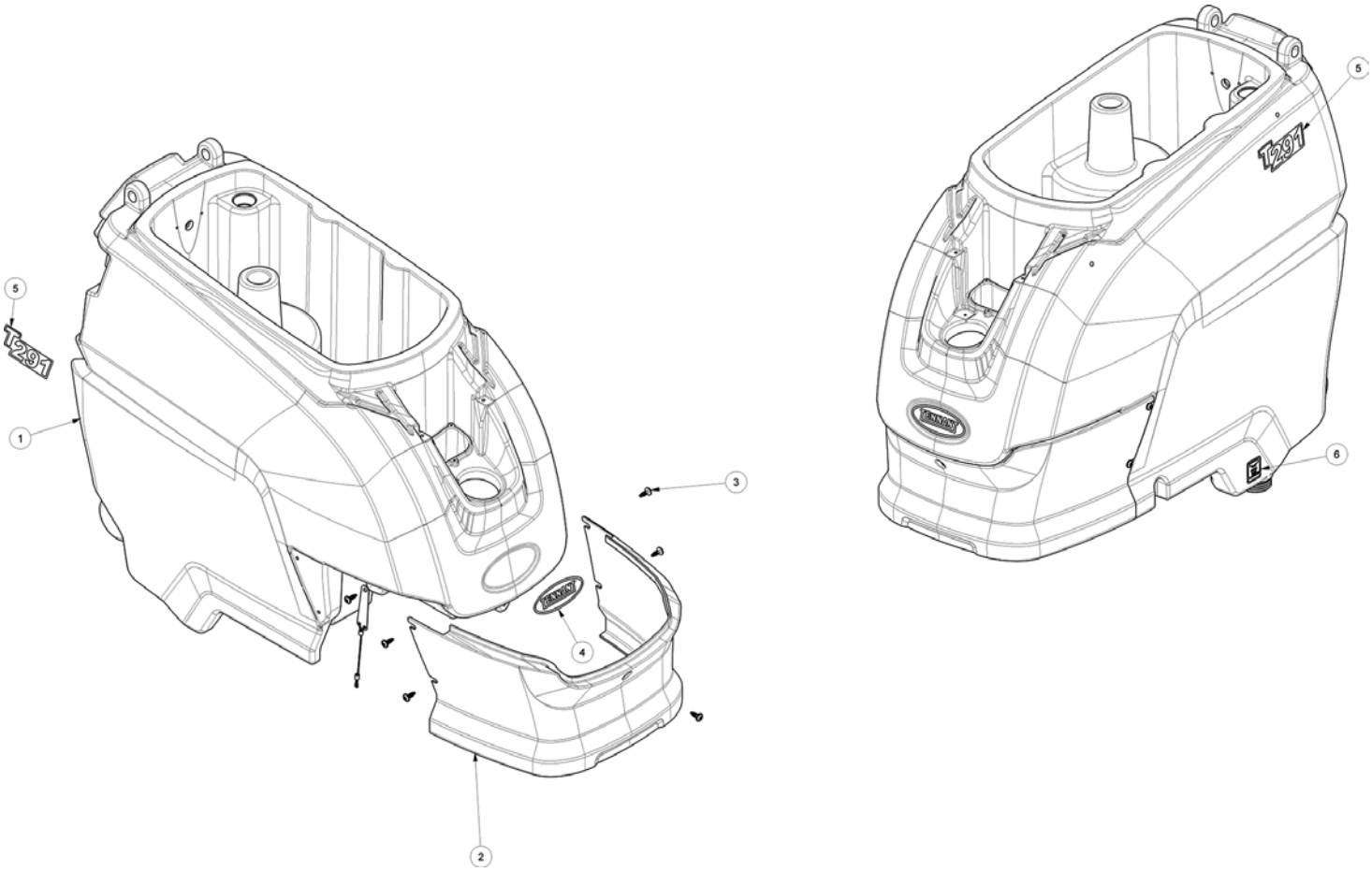

Ref.	Part No.	Description	Quantity
0001	MPVR12965	TANK [T291]	1,00
0002	MPVR12966	COVERING [T291/T391]	1,00
0003	VTVT01430	SCREW STS KN1038 8x22 - T40 A2	4,00
	KTRI06377	LABEL, KIT (includes 4, 5, 6)	1,00
0004	NA	LABEL TENNANT	1,00
0005	NA	LABEL T291	2,00
0006	NA	LABEL FILTER T291-T391	1,00

TOOLS BAR KIT KTRI04848 [OPTION]

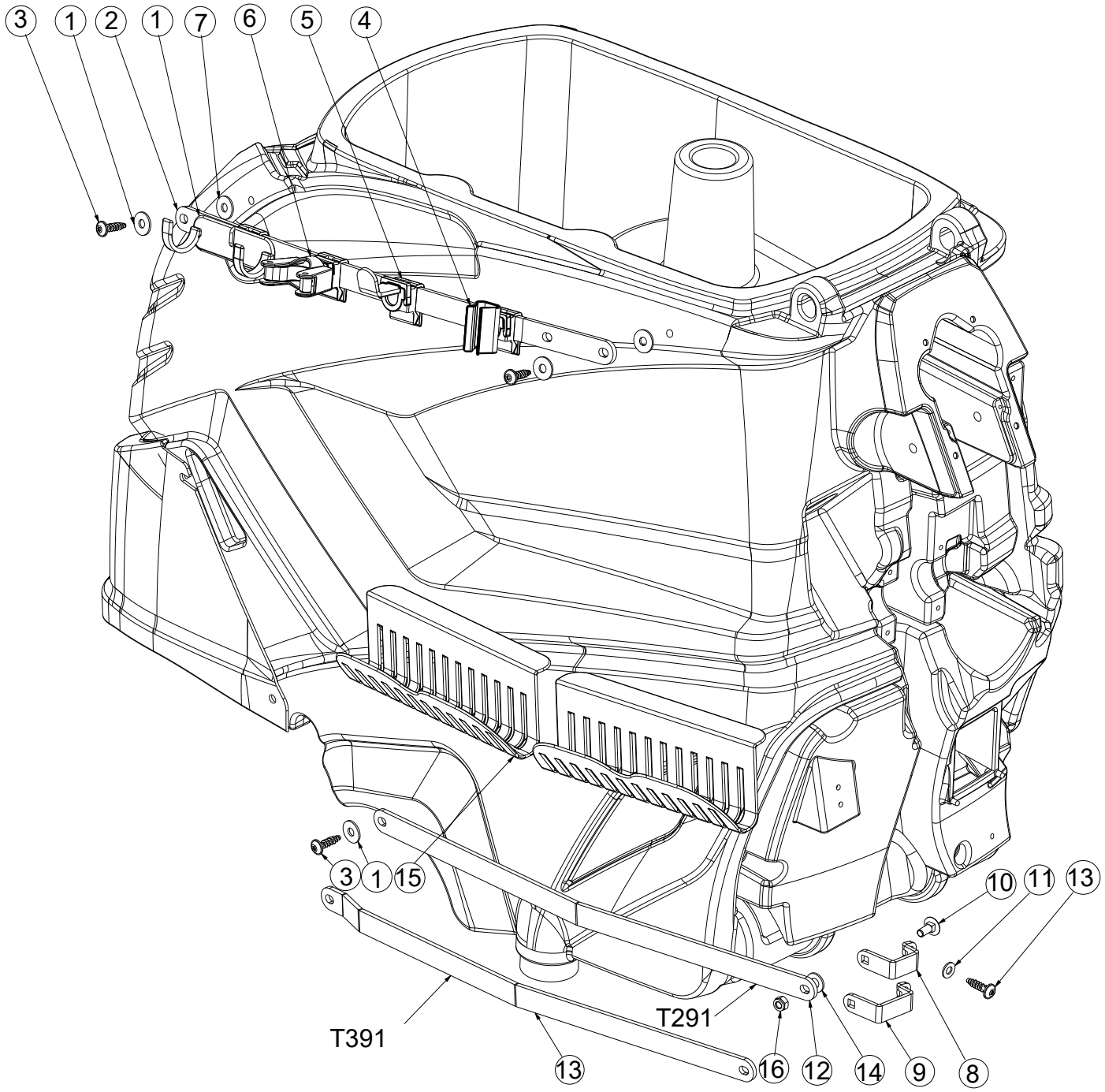

Ref.	Part No.	Description	Quantity
	KTRI04848	TOOL BAR KIT [T291/T391]	1,00
0001	897120	WASHER D. 8 X24 INOX UNI 6593 FLAT	5,00
0002	LAFN11122	UPPER BAR TOOLS	1,00
0003	VTVT01429	SCREW 8x30 - T40 A2	4,00
0004	PMVR95637	COMPLETE HAND HOLDER	2,00
0005	PMVR06997	BRUSH HOLDER	2,00
0006	PMVR01545	P. HANDLE RUBBER TOOLFLEX + BRACKET	2,00
0007	PMVR95639	HOLDER COMPLETE	2,00
0008	LAFN11124	FIXING BRACKET TOOLS T291	1,00
0009	LAFN11200	FIXING BRACKET TOOLS T391	1,00
0010	897217	SCREW M8-20 INOX UNI 5731	1,00
0011	897152	WASHER D. 8 INOX UNI 6592 FLAT	1,00
0012	LAFN11123	LOWER BAR TOOLS T291	1,00
0013	LAFN11199	LOWER BAR TOOLS T391	1,00
0014	897432	WASHER D.10 X21 INOX UNI 6592	1,00
0015	MPVR94835	BASE BRAID	2,00
0016	VTDD01701	NUT M8 AUTOBLOC. LOW DIN985 INOX + ZIN.	1,00

CHEM DOSE KIT - KTRI06373 [OPTION]

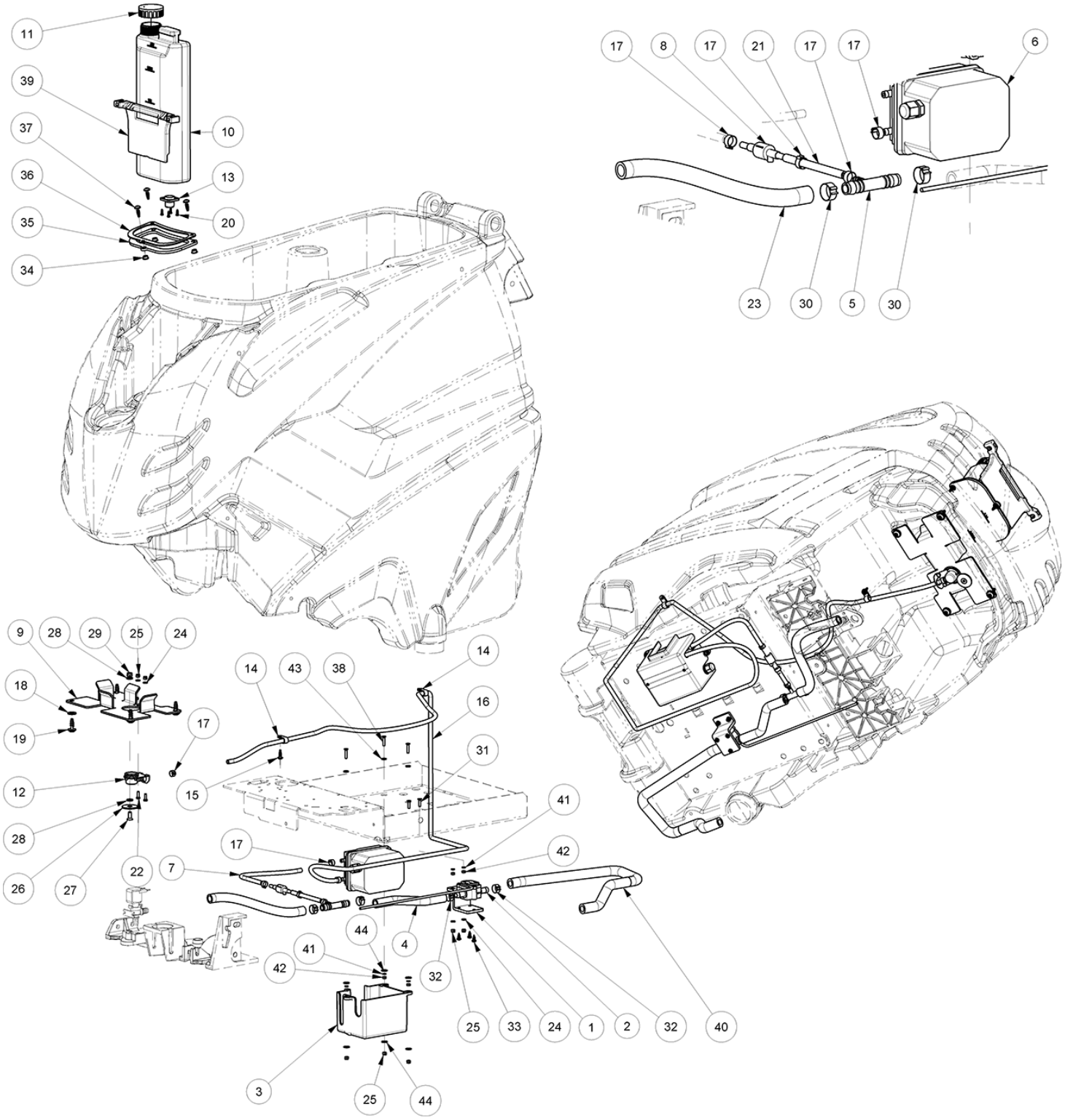

CHEM DOSE KIT - KTRI06373 [OPTION]

Ref.	Part No.	Description	Quantity
	KTRI06373	KIT, CHEM DOSE [T291/T391]	1,00
0001	LAFN11278	BRACKET FLOWMETERS	1,00
0002	MEVR02922	FLOWMETERS	1,00
0003	MPVR06508	BOX -	1,00
0004	897256	HOSE FLEX D.12X3 ARMORV.PVC TR	0,18
0005	RCVR00745	CONNECTOR TRS 12-6-12	1,00
0006	PPBP00123	PUMP -	1,00
0007	TBBP00003	TUBE CRISTALLO 6X9	0,10
0008	RCGR00079	VALVE -	1,00
0009	LAFN11088	BRACKET -	1,00
0010	KTRI05275	KIT CHEM DOSE TANK (Includes 11, 13, 20)	1,00
0011	MPVR40756	TANK CAP KSM C/F.	1,00
0012	VVSF00031	VALVE -	1,00
0013	VVSF00031	VALVE -	1,00
0014	MPVR02933	DUCT LOCK D.9,5	2,00
0015	VTVT01072	SCREW STS KN1038 5x16 - T20 A2	1,00
0016	TBBP00003	TUBE CRISTALLO 6X9	1,60
0017	FSVR00087	CLAMP A COLLARE	5,00
0018	VTRS13947	WASHER D. 8 INX UNI 6592	4,00
0019	VTVT01430	SCREW STS KN1038 8x22 - T40 A2	4,00
0020	VTVT00820	SCREW TC+ M.3,5-10	4,00
0021	TBBP00003	TUBE CRISTALLO 6X9	0,75
0022	VTVT00817	SCREW TE M4x12 UNI 5739 INOX	2,00
0023	897256	HOSE FLEX D.12X3 ARMORV.PVC TR	0,23
0024	897156	WASHER D. 4 INX	4,00
0025	897276	NUT M 4 ATB A2	4,00
0026	897375	WASHER D. 8 X32 UNI 6593 INX	1,00
0027	VTVT00832	SCREW TSPEI M6X16 INOX	4,00
0028	897106	WASHER D.6 UNI 6592 INOX	5,00
0029	897138	NUT M6 INOX	4,00
0030	897257	CLAMP	2,00
0031	897502	SCREW M 4X 16 TSPEI UNI 5933	2,00
0032	FSVR00258	CLAMP -	2,00
0033	VTVT48694	SCREW TCB TC 5 X12 UNI 9707 TZ	3,00
0034	LAFN11180	SPACER CHEM DOSE	3,00
0035	GUGO00586	GASKET CHEM DOSE	1,00
0036	LAFN11121	FLANGE	1,00
0037	VTVT01591	SCREW STS KN1038 6x20 - T25 A2	3,00
0038	VTVT00877	SCREW TSPEI M 4X20 INX UNI5933	3,00
0039	MPVR13210	SUPPORT CHEM DOSE COVER, TEAL	1,00
0040	897256	HOSE FLEX D.12X3 ARMORV.PVC TR	0,60
0041	897204	WASHER D. 4 GROVER A2 UNI1751	5,00
0042	VTDD00147	NUT M 4 INX U.5588	5,00
0043	897166	WASHER D. 5 INX	3,00
0044	VTRS00017	WASHER STEEL INOX 4X12	6,00

ELECTRICAL DIAGRAM [T291 PAD ASSIST MODEL]

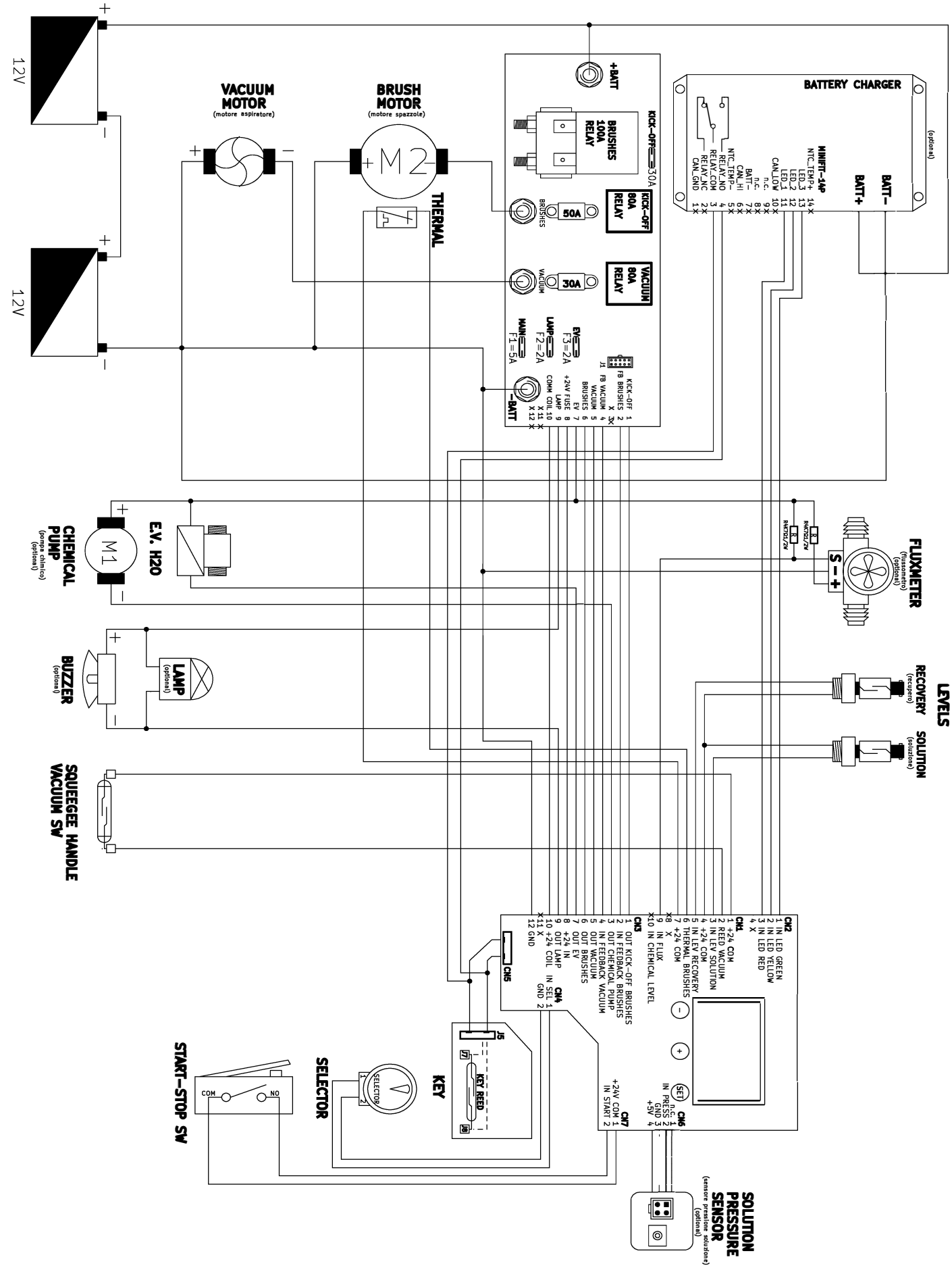
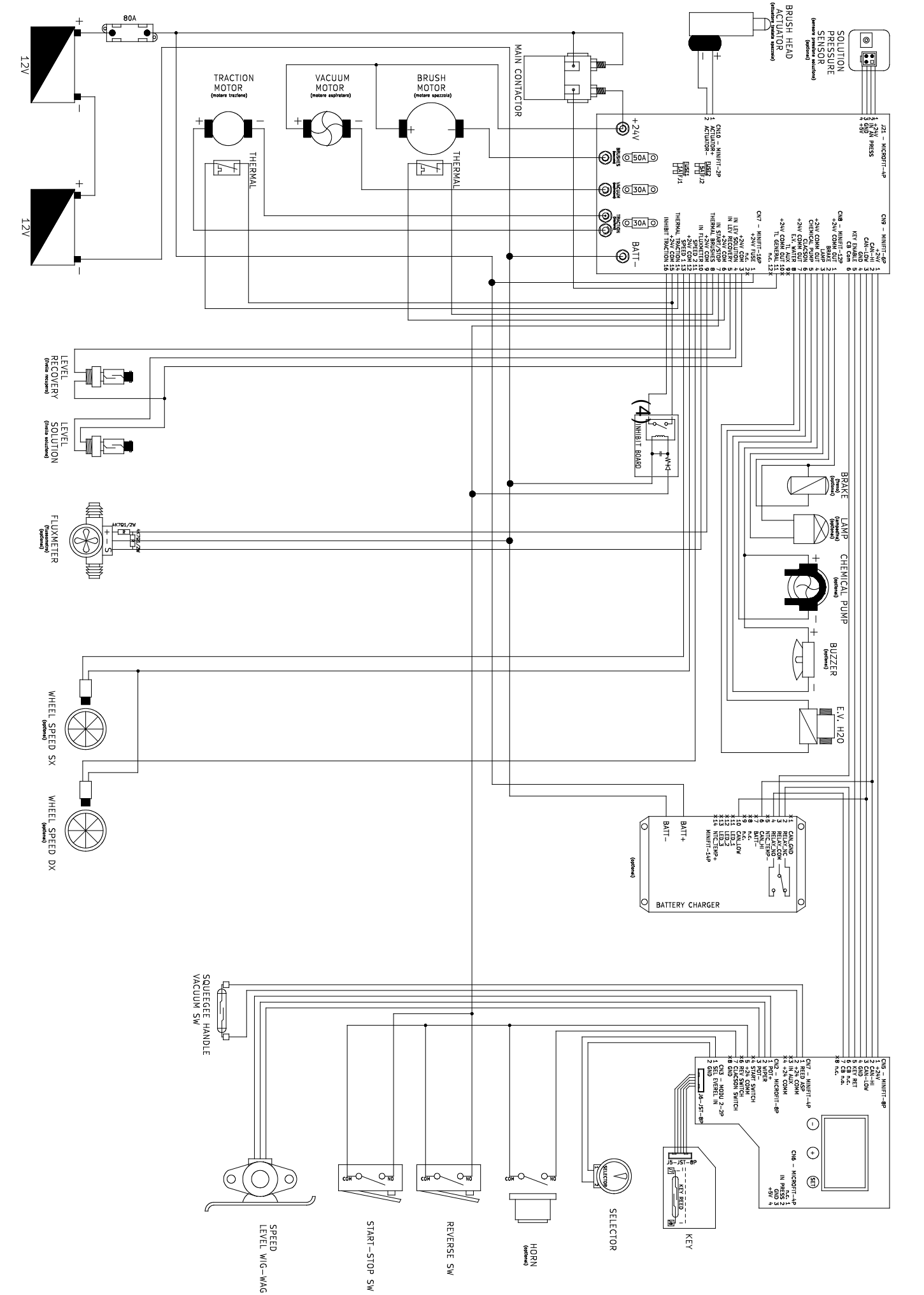
ELECTRICAL DIAGRAM [T291 PROPEL MODEL]