T191

Corded Floor Scrubber

Parts Manual

Model Part No.:
LPTE00701 - SCRUBBER [T191 45CM BR, CORDED, EU]
LPTE00702 - SCRUBBER [T191 45CM BR, CORDED, UK]

Tennant*True*® Parts

Europe

To view, print or download
Tennant manuals, visit:

www.tennantco.com/manuals

9021982
Rev. 00 (02-2022)

Only use TENNANT Company supplied or equivalent parts. Parts and supplies may be ordered online, by phone or from any Tennant Authorized Service Center or Distributor.

Before Ordering any parts or supplies, be sure to have the machine model number and serial number available.

Serial Number Location

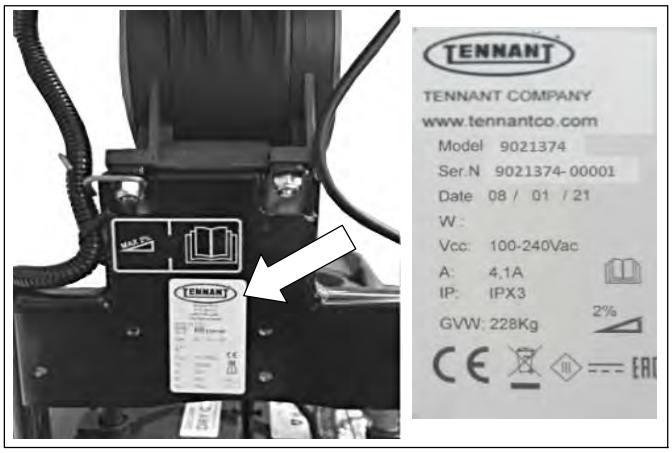

TABLE OF CONTENTS

RECOMMENDED SPARE PARTS LIST 3
BRUSHES / PAD DRIVER AND PADS 3
TANK COMPONENTS GROUP 4
SCRUB HEAD & SQUEEGEE GROUP 6
HANDLE & FRAME GROUP 8
ELECTRICAL DIAGRAM 10

Tennant Company N.V.

Industrielaan 6 5405 AB
P.O. Box 6 5400 AA
Uden- The Netherlands

europe@tennantco.com

Specifications and parts are subject to change without notice.

Copyright © 2021 TENNANT Company

RECOMMENDED SPARE PARTS LIST

Part Number	Description
SPPV02665	BRUSH ASSY, DISK, SCB, 45 CM, PYP (STD)
SPPV02669	BRUSH ASSY, DISK, SCB, 45CM,MIX FBR,SOFT
SPPV02671	DRIVER ASSY, PAD, 45 CM
995614	PAD, BUFF, 18.0D /457, RED [3M, 5PC]
995622	PAD, SCB, 18.0INCH /457 [3M BLU, 5PC]
995629	PAD, STRIPPING, 18.0/457, BROWN [3M, 5PC]
1215457	PAD, POLISH, 18.0D, PURPLE [5PC]
MPVR05953	BLADE, SQGE, FRONT, 660L, LATEX
MPVR05954	BLADE, SQGE, REAR, 715L, LATEX
KTRI02055	BLADE KIT, SQGE, PYU [T191]
MPVR06537	BLADE, SQGE, FRONT, 660L, LINATEX
MPVR06538	BLADE, SQGE, REAR, 715L, LINATEX
MOMO00243	MOTOR, VACUUM 240V
PMVR01887	VALVE, WATER, SOLENOID, 240 V
MOMO00259	MOTOR, BRUSH, 240V
MECE00536	CIRCUITBOARD, RELAY
MECE00537	CIRCUITBOARD, DISPLAY
MEVR01938	CARBON BRUSH, MOTOR, VAC FAN 240V
MEVR02047	FUSE 8A
MEVR02092	FUSE 4A
MEVR04015	FUSE 3,15A
TBFX00350	HOSE ASSY, DRAIN
9017721	CLIP, HOSE, RECVY
9017842	HOSE ASSY, RECVY

BRUSHES / PAD DRIVER & PADS

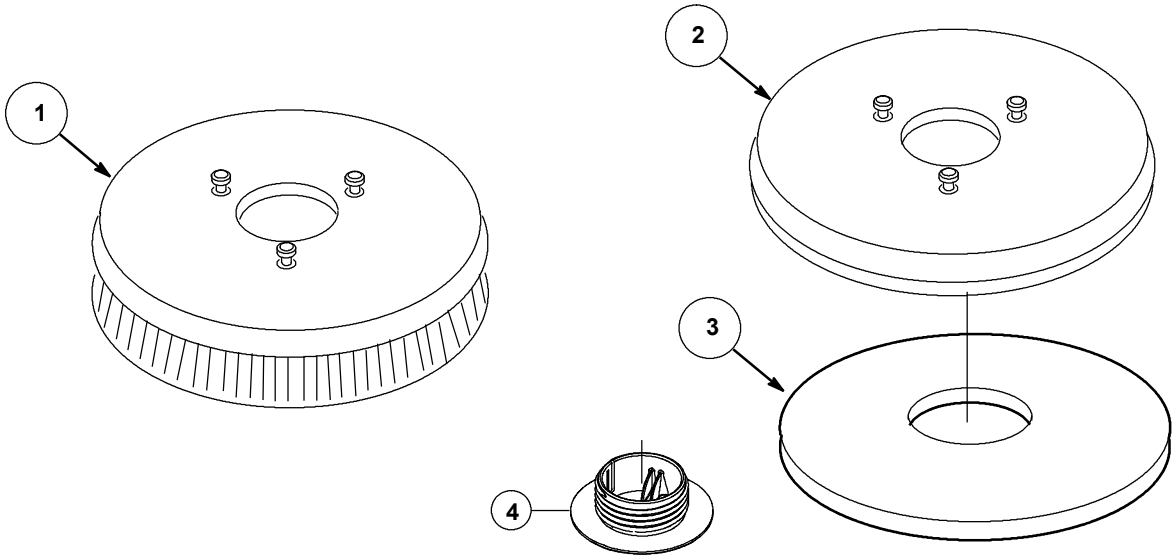

Ref.	Part No.	Description	Quantity
0001	SPPV02665	BRUSH ASSY, DISK, SCB, 45CM, PYP [STANDARD]	1,00
0001	SPPV02669	BRUSH ASSY, DISK, SCB, 45CM, PYP, SOFT	1,00
0002	SPPV02671	DRIVER ASSY, PAD, 45CM	1,00
0003	995629	PAD, STRIP, 18.0/457, BROWN [3M, 5PC]	1,00
0003	995622	PAD, SCB, 18.0/457, BLU [3M, 5PC]	1,00
0003	995614	PAD, BUFF, 18.0/457, RED [3M, 5PC]	1,00
0003	1215457	PAD, POLISH, 18.0/457, PURPLE [5PC]	1,00
0004	MPVR04088	LOCK, CENTER, PAD DRIVER	1,00

TANK COMPONENTS GROUP

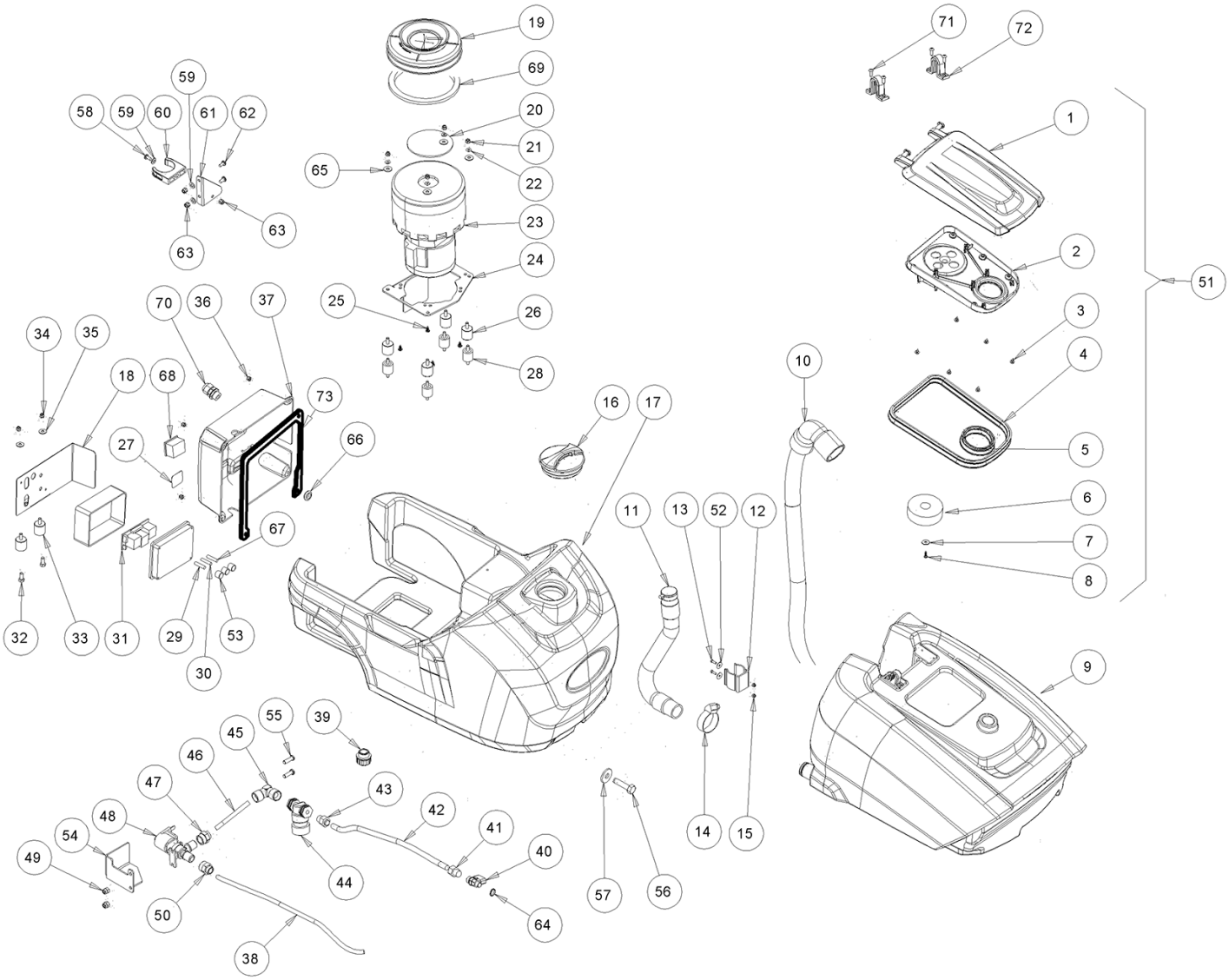

Ref.	Part No.	Description	Quantity	Validity From	Validity To	Price
0001	897664	COVER	1,00			--
0002	897665	COVER, INNER, LID, TANK	1,00			--
0003	897574	SCREW SELF TAPPING 4.8X9.5 SUS	8,00			--
0004	9017840	SEAL, COVER, RECVY TANK	1,00			--
0005	897666	GASKET	1,00			--
0006	9017844	FLOAT, SHUTOFF	1,00			--
0007	897576	WASHER, M30X6X3	1,00			--
0008	VTVT48694	SCREW TCB TC 5 X12 UNI 9707 TZ	1,00			--
0009	MPVR13067	TANK RECOVERY T191	1,00			--
0010	9017842	HOSE ASSY, RECVY	1,00			--
0011	TBFX00350	TUBE HOSE DRAIN	1,00			--
0012	9017721	CLIP, HOSE, RECVY	1,00			--
0013	604209	SCREW, M4X16	2,00			--
0014	FSVR00095	CLAMP 30-45	1,00			--
0015	VTDD04369	NUT M 4 TEF UNI 7473	2,00			--
0016	897570	TANK, SOLUTION, CAP	1,00			--
0017	MPVR13068	TANK SOLUTION T191	1,00			--
0018	LAFN08980	PLATE -	1,00			--
0019	GUGO00599	GASKET	1,00			--
0020	897649	FILTER, MOTOR, VACFAN, d78	1,00			--
0021	897497	NUT, M5, INOX	4,00			--
0022	897644	WASHER D. 5 INX GRW UNI 1751	4,00			--
0023	9018339	FAN, VACUUM	1,00			--
0024	LAFN08062	AXLE .	1,00			--
0025	VTVT48694	SCREW TCB TC 5 X12 UNI 9707 TZ	4,00			--
0026	LAFN08967	SPACER CT15-30	4,00			--
0027	MPVR11195	CAP -	1,00			--
0028	897569	VIBRATION, DAMP	4,00			--
0029	MEVR02047	FUSE 8A 6,3X32 GLASS	1,00			--
0030	MEVR02092	FUSE 4A RITARDATO	1,00			--
0031	MECE00536	BOARD RELAY CT15-30 230V	1,00			--
0032	897459	SCREW, M5X12, TE, INOX	2,00			--
0033	LAFN08967	SPACER CT15-30	2,00			--
0034	VTDD01693	NUT, M5, INOX	2,00			--

TANK COMPONENTS GROUP

Ref.	K	Part N.	Description	Quantity	Validity From	To	Price
0035		897384	WASHER D. 5X14 INX	2,00			--
0036		VTDD04368	NUT, M4, ZIN, UNI5588	4,00			--
0037		MPVR06234	COVER	1,00			--
0038		TBBP00481	TUBE -	0,48			--
0039		897176	CAP 1/2"	1,00			--
0040		RCGR00081	VALVE -	1,00			--
0041		RCVR00770	CONNECTOR 1/8	1,00			--
0042		TBBP00481	TUBE -	0,32			--
0043		RCVR00789	CONNECTOR -	1,00			--
0044		9018511	FILTER, WATER, COMPL	1,00			--
0045		RCVR00773	CONNECTOR 1/4	1,00			--
0046		TBBP00481	TUBE -	0,20			--
0047		RCVR00772	CONNECTOR 1/4	1,00			--
0048		PMVR01989	SOLENOID VALVE CT30 230Vac	1,00			--
0049		897276	NUT M 4 ATB A2	2,00			--
0050		RCVR00772	CONNECTOR 1/4	1,00			--
0051		KTRI05575	LID ASSY, RECOVERY TANK.	1,00			--
0052		897589	WASHER, UNI6592, M4X16, ZB	2,00			--
0053		MEVR02091	FUSE-HOLDER -	2,00			--
0054		897623	SOLENOIDE, VALVE, PROTECTION	1,00			--
0055		897359	SCREW, TCTC, M4X16, ACCIAIO, INOX	2,00			--
0056		VTVT01196	SCREW TE M 5X 70 UNI 5739	1,00			--
0057		897384	WASHER D. 5X14 INX	1,00			--
0058		897359	SCREW, TCTC, M4X16, ACCIAIO, INOX	1,00			--
0059		897156	WASHER D. 4 INX	3,00			--
0060		897245	CLIP	1,00			--
0061		LAFN09354	BRACKET CLIP SUPPORT	1,00			--
0062		VTVT15965	SCREW, TCB-TC, M4X12, UNI7687, INX	2,00			--
0063		897160	NUT, M4, INOX, ZN	3,00			--
0064		897590	O-RING, D. 6.75X1.78, NBR, 70SH	1,00			--
0065		897384	WASHER D. 5X14 INX	4,00			--
0066		MEVR02113	FAIR-LEAD	1,00			--
0067		MEVR04379	FUSE -	1,00			--
0068		MECI00720	SWITCH B4	1,00			--
0069		FSVR00264	CLAMP	1,00			--
0070		MEVR00034	FAIR-LEAD PG11 CON GHIERA	1,00			--
0071		897669	SCREW STS KN1031-Neu 4x16 - H2	4,00			--
0072		897668	HINGE [416S]	2,00			--
0073		GUGO00480	GASKET -	1,00			--

HANDLE & FRAME GROUP

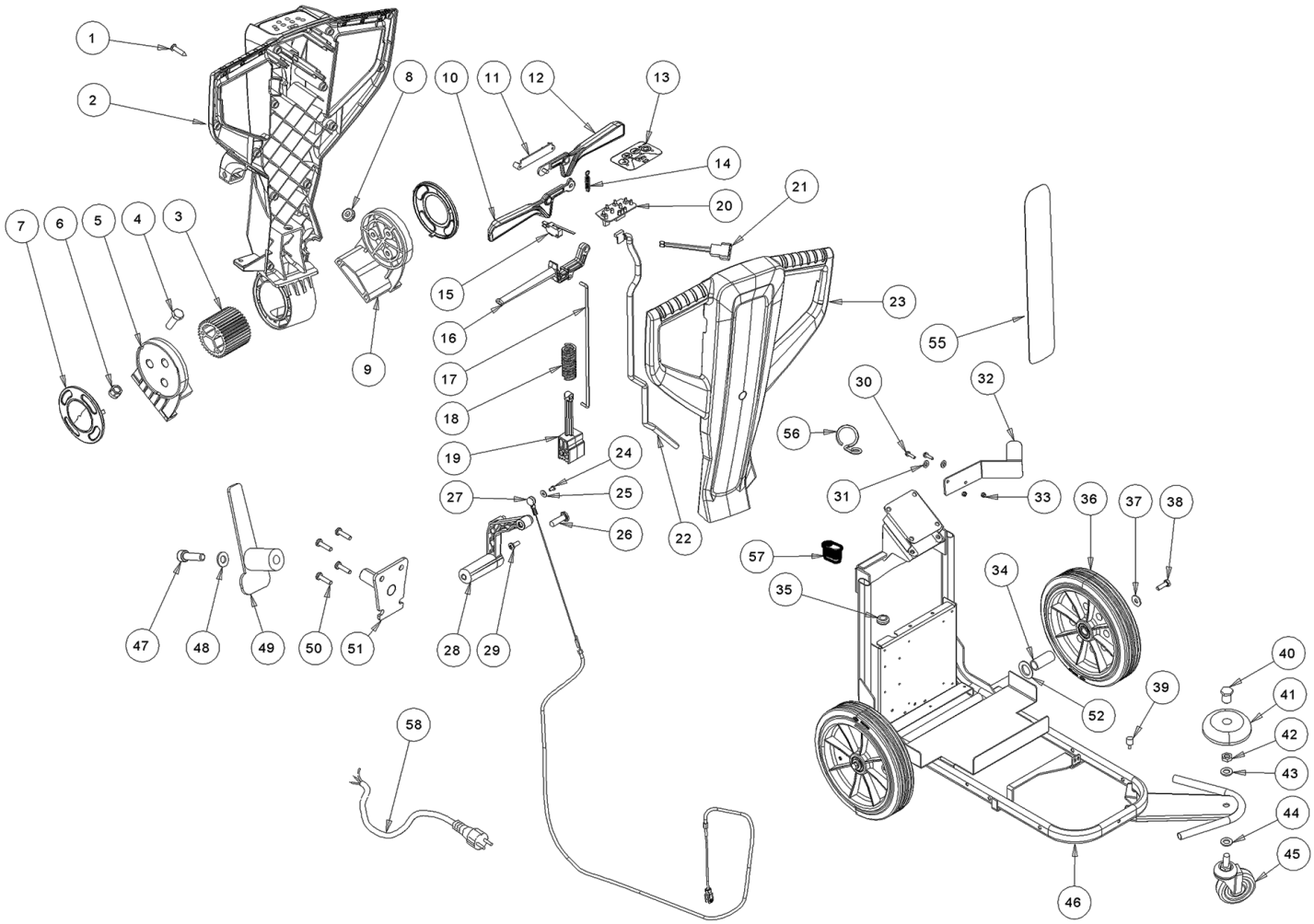

Ref.	Part No.	Description	Quantity	Validity From	To	Price
0001	897593	SCREW, M4,8X19	14,00			--
0002	897670	CRANKCASE	1,00			--
0003	897595	GEAR	1,00			--
0004	VTVT75724	SCREW, HEX, M8 X 1.25 X 22	4,00			--
0005	897597	SHELL, DX	1,00			--
0006	897598	NUT, M8, FLAT	4,00			--
0007	897599	COVER	2,00			--
0008	897600	FAIR, LEAD	1,00			--
0009	897601	SHELL, SX	1,00			--
0010	897671	LEVER, DX	1,00			--
0011	897603	CARD,SUPPORT, ELECTRONIC	1,00			--
0012	897672	LEVER, SX	1,00			--
0013	N/A	LABEL	1,00			--
0014	897606	SPRING	1,00			--
0015	9017689	SWITCH, HANDLE	1,00			--
0016	897674	LEVER, ADJUSTMENT	1,00			--
0017	KTRI02273	KIT HANDLE ADJUST ROD	1,00			--
0018	897608	SPRING	1,00			--
0019	897609	HANDLE, SUPPORT	1,00			--
0020	9017750	CIRCUITBOARD, DISPLAY	1,00			--
0021	897611	BOTTON, PUSH, WIRING	1,00			--
0022	897612	CABLE, RIBBON, FLAT	1,00			--
0023	897675	CRANKCASE, HANDLE, FRONT	1,00			--
0024	897150	SCREW, TC, M4X12, ZN	1,00			--
0025	897149	WASHER 4-16 INOX A2	1,00			--
0026	897614	PIN	1,00			--
0027	9017846	CABLE, LIFT, SQGE	1,00			--
0028	9017688	LEVER, LIFT, SQGE	1,00			--
0029	897615	SCREW, TC, M6X12	1,00			--
0030	897128	SCREW TE 6X16 UNI5739	2,00			--
0031	897106	WASHER D.6 UNI 6592 INOX	2,00			--
0032	LAFN09171	BRACKET -	1,00			--
0033	897138	NUT M6 INOX	2,00			--
0034	LAFN11016	SPACER -	2,00			--
0035	897556	FAIR, LEAD DIAMETER 15.5	1,00			--
0036	897618	WHEEL, GRAY, D.250	2,00			--
0037	897619	WASHER, D.8X24, ZC	2,00			--
0038	897676	SCREW TE 8X16 UNI5739	2,00			--
0039	MPVR05967	CAP -	1,00			--
0040	LAFN09172	BUSHING -	1,00			--

HANDLE & FRAME GROUP

Ref.	K	Part No.	Description	Quantity	Validity From	To	Price
0041		MPVR05965	WHEEL -	1,00			--
0042		VTDD00502	NUT M12	1,00			--
0043		897247	WASHER, D. 12X36X2.5, UNI6593	1,00			--
0044		897247	WASHER, D. 12X36X2.5, UNI6593	1,00			--
0045		RTRT00632	WHEEL -	1,00			--
0046		LAFN07901	FRAME -	1,00			--
0047		VTVT63035	SCREW TCEI M8X25 BRUNITA	1,00			--
0048		VTRS00230	WASHER D. 8	1,00			--
0049		MPVR34714	CABLE SUPPORT E 350	1,00			--
0050		VTVT48694	SCREW TCB TC 5 X12 UNI 9707 TZ	4,00			--
0051		LAFN09222	BRACKET -	1,00			--
0055		ETET16870	LABEL CT15 BLUE	1,00			--
0056		897625	HOOK	1,00			--
0057		GUGO00508	GASKET 30X15	1,00			--
0058		MECB01274	CABLE POWER CORD EU PLUG 15MT	1,00			--
0058		MECB02290	CABLE POWER CORD UK PLUG 15MT	1,00			--

SCRUB HEAD & SQUEEGEE GROUP

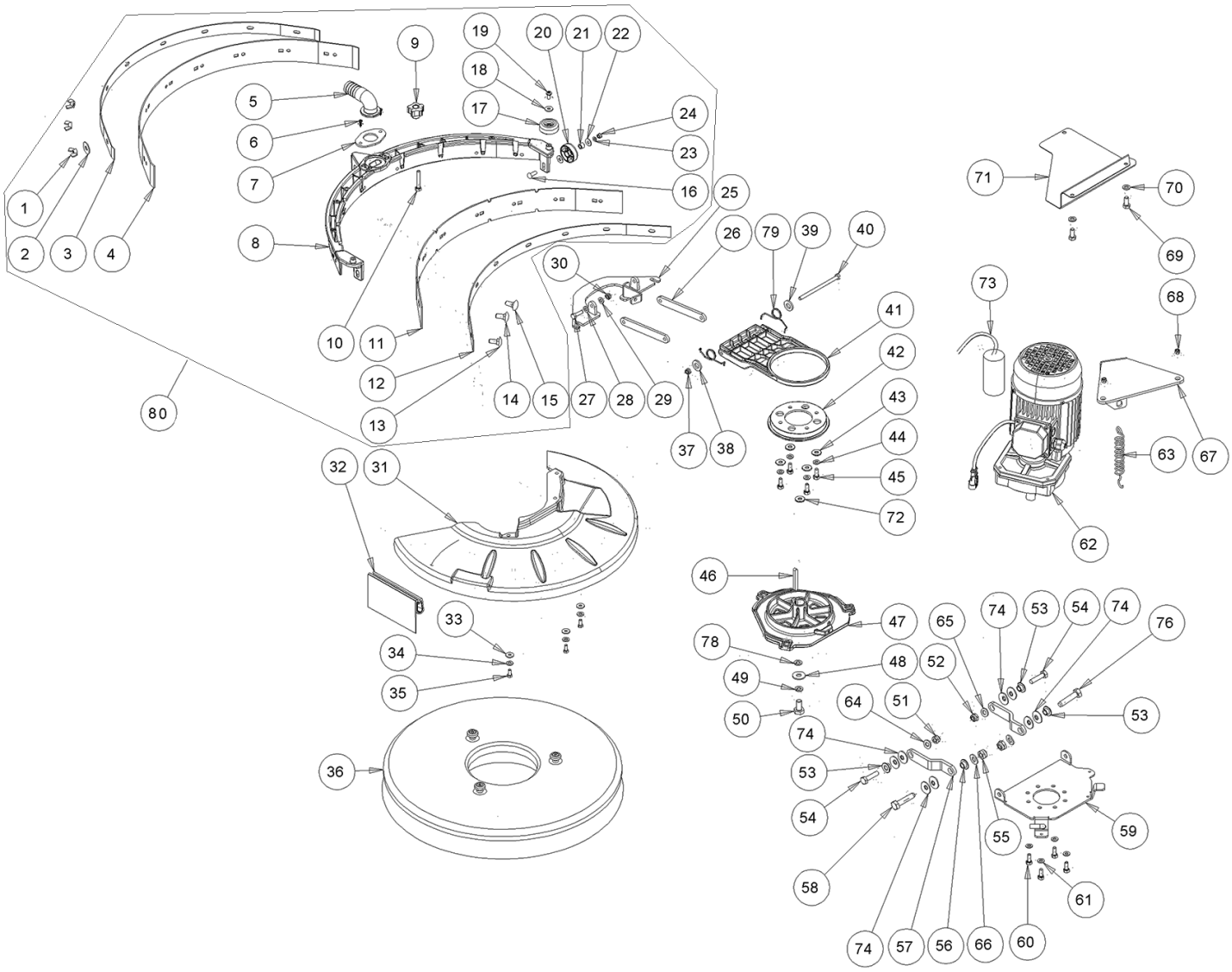

Ref.	K	Part N.	Description	Quantity	Validity From	To	Price
0001		897626	NUT, M5	6,00			--
0002		897384	WASHER D. 5X14 INX	6,00			--
0003		LAFN07908	BRACKET -	1,00			--
0004		MPVR06538	BLADE SQGE, REAR, 715L, LINATEX (STANDARD)	1,00			
0004		MPVR05954	BLADE SQGE, REAR, 715L, LATEX (OPTION)	1,00			
0004		KTRI02055	BLADE KIT, SQGE, REAR & FRONT, PYU (OPTION)	1,00			
0005		897628	FITTING, CONNECTOR, ELBOW	1,00			
0006		VTVT48694	SCREW TCB TC 5 X12 UNI 9707 TZ	2,00			
0007		897629	FLANGE	1,00			
0008		MPVR05914	FLOOR WIPER YELLOW RAL1021	1,00			
0009		897630	KNOB, SMALL	2,00			
0010		897115	SCREW, M6X55, SS	2,00			
0011		MPVR06537	BLADE SQGE, FRONT, 660L, LINATEX (STANDARD)	1,00			
0011		MPVR05953	BLADE SQGE, FRONT, 66-L, LATEX (OPTION)	1,00			
0011		KTRI02055	BLADE KIT, SQGE, REAR & FRONT, PYU (OPTION)	1,00			
0012		LAFN07907	BRACKET -	1,00			--
0013		897635	SCREW M5x25	2,00			--
0014		897681	SCREW, M5X35	2,00			--
0015		897681	SCREW, M5X35	2,00			--
0016		897632	SCREW, M5X20	3,00			--
0017		9017848	WHEEL, SQGE	2,00			--
0018		897384	WASHER D. 5X14 INX	2,00			--
0019		VTVT48694	SCREW TCB TC 5 X12 UNI 9707 TZ	2,00			--
0020		9017848	WHEEL, SQGE	3,00			--
0021		897633	BUSHING	3,00			--
0022		897384	WASHER D. 5X14 INX	6,00			--
0023		897644	WASHER D. 5 INX GRW UNI 1751	3,00			--
0024		VTDD01693	NUT, M5, INOX	3,00			--
0025		LAFN07903	SUPPORT -	1,00			--
0026		LAFN07902	ARM -	2,00			--
0027		897287	SCREW TE 6X20 UNI5739 INX	2,00			--
0028		897106	WASHER D.6 UNI 6592 INOX	2,00			--
0029		897106	WASHER D.6 UNI 6592 INOX	2,00			--
0030		897138	NUT M6 INOX	2,00			--
0031		MPVR05916	COVER BRUSH HEAD	1,00			--

SCRUB HEAD & SQUEEGEE GROUP

Ref. K	Part N.	Description	Quantity	Validity From	To	Price
0032	MPVR05966	FLAP BRUSH SKIRT CT30	1,00			--
0033	897384	WASHER D. 5X14 INX	3,00			--
0034	897644	WASHER D. 5 INX GRW UNI 1751	3,00			--
0035	897459	SCREW, M5X12, TE, INOX	3,00			--
0036	SPPV02665	BRUSH ASSY, DISK, SCB, 45CM, PYP [STANDARD]	1,00			--
0037	897138	NUT M6 INOX	1,00			--
0038	897112	WASHER D. 6X18 INX UNI 6593	1,00			--
0039	897112	WASHER D. 6X18 INX UNI 6593	1,00			--
0040	897639	SCREW, M6X140	1,00			--
0041	897638	BODY, SIDE, SX	1,00			--
0042	897637	BRACKET	1,00			--
0043	897112	WASHER D. 6X18 INX UNI 6593	4,00			--
0044	897129	WASHER D. 6 INX GRW UNI 1751	4,00			--
0045	897287	SCREW TE 6X20 UNI5739 INX	4,00			--
0046	VTVR16617	WEDGE 6X 6X30 UNI 6604	1,00			--
0047	KTRI06334	HUB KIT, DRIVE, BRUSH, DISK	1,00			--
0048	897120	WASHER, D.8X24, UNI6593, INOX	1,00			--
0049	897216	WASHER, D. 8, GRW, UNI1751, INOX	1,00			--
0050	897316	SCREW, TE, M8X20, UNI5739, INOX	1,00			--
0051	897124	NUT, M8, INOX	1,00			--
0052	897124	NUT, M8, INOX	1,00			--
0053	LAFN94013	BUSHING -	3,00			--
0054	VTVT01378	SCREW TBEI M8X35	2,00			--
0055	897124	NUT, M8, INOX	2,00			--
0056	897225	BUSHING LEVA POSTER.	1,00			--
0057	LAFN94012	ARM -	2,00			--
0058	VTVT01195	SCREW TBEI M 8X 25 ISO 7380 IX	2,00			--
0059	LAFN11703	PLATE .	1,00			--
0060	897130	SCREW, TE, M6X12, UNI5739, A2	4,00			--
0061	897129	WASHER D. 6 INX GRW UNI 1751	4,00			--
0062	MOMO00259	MOTOR CT30-CT45 230VAC 50-60HZ	1,00			--
0063	MLML00065	SPRING L0=80 De=12 Df=1.7	1,00			--
0064	897152	WASHER, D.8, UNI6592, INOX	1,00			--
0065	897152	WASHER, D.8, UNI6592, INOX	1,00			--
0066	897152	WASHER, D.8, UNI6592, INOX	2,00			--
0068	VTDD00128	SELF-LOCJ.NUT M5	2,00			--
0069	897565	SCREW TE M 5X 10 UNI 5739	2,00			--
0070	897384	WASHER D. 5X14 INX	2,00			--
0071	MPVR05957	PROTECTION -	1,00			--
0072	897152	WASHER, D.8, UNI6592, INOX	1,00			--
0073	METT00092	DISJUNCTOR CT30-CT45C	1,00			--
0074	MLML00095	DISC SPRINGS 12,2x25x0,9 DIN 2093	8,00			--
0076	897246	SCREW, TE, M8X30, UNI5739, INOX	1,00			--
0078	897152	WASHER, D.8, UNI6592, INOX	1,00			--
0079	9017849	SPRING, SQGE	2,00			--
0080	PMVR06824	SQUEEGEE ASSY [T191]	1,00			--
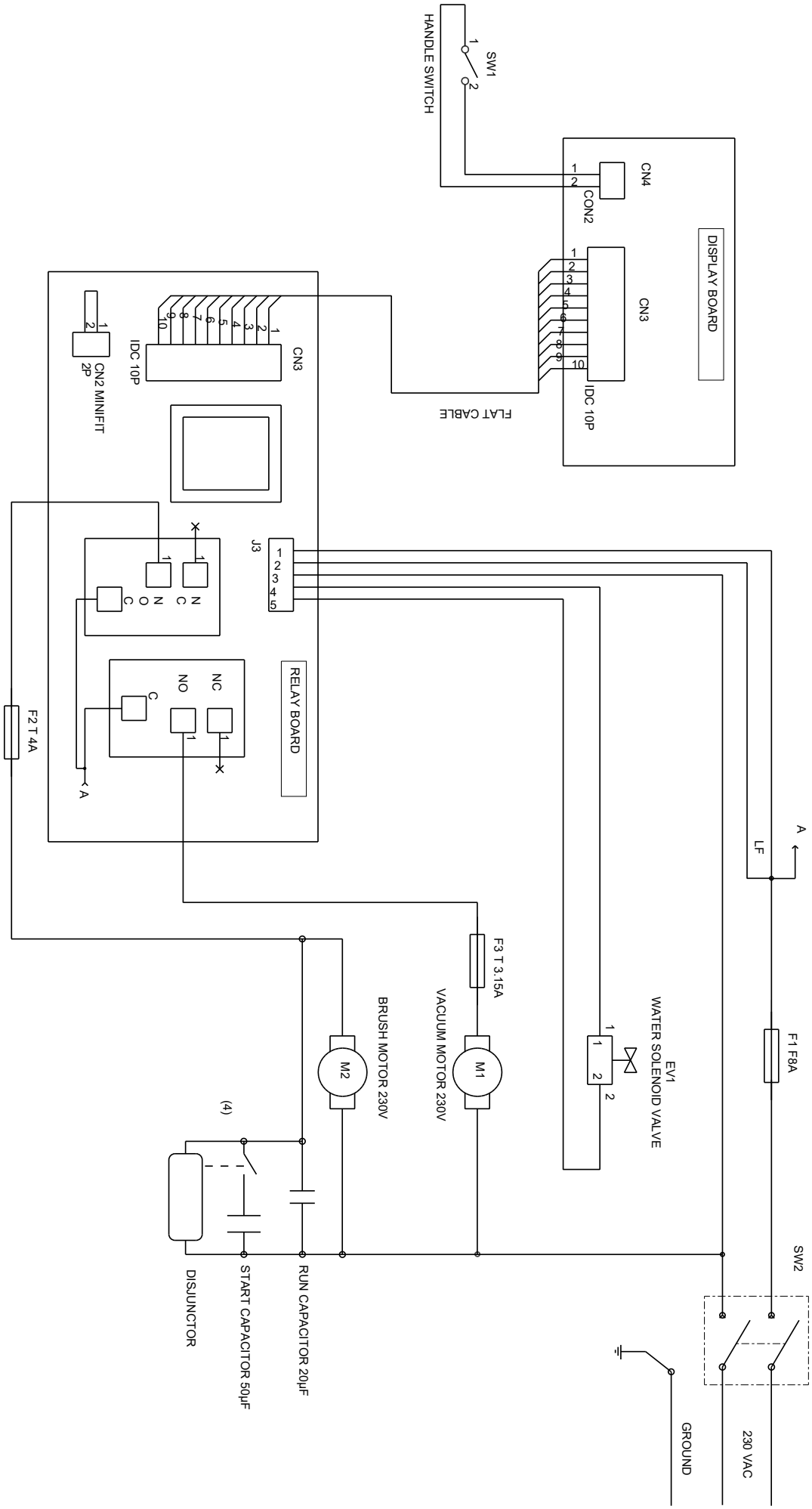
ELECTRICAL DIAGRAM