T17
(Battery)

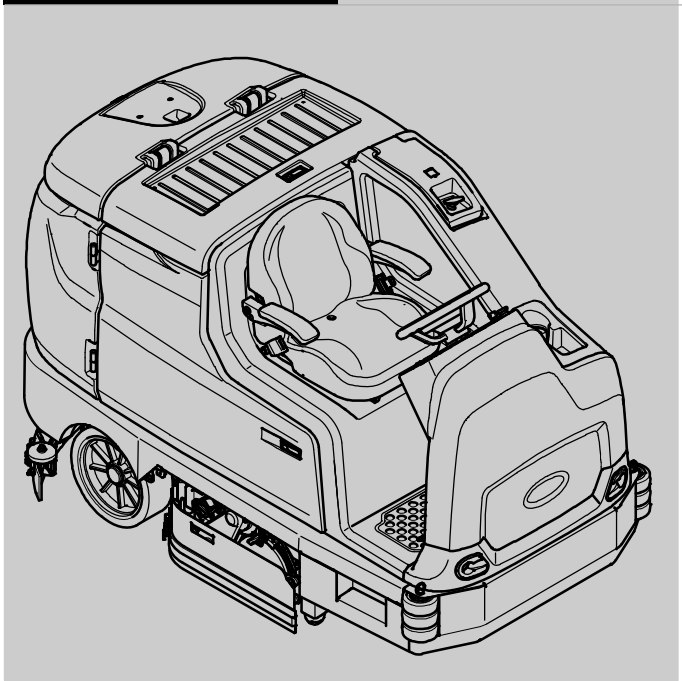

Rider Scubber
Parts Manual

ES® Extended Scrub System
Tennant*True®* *Parts*
IRIS® a Tennant Technology

ec H2O™
An ORBIO™ Technology

CE

For latest Parts manual or other language Operator manuals, visit:

www.tennantco.com/manuals

9020192
Rev. 07 (4-2017)

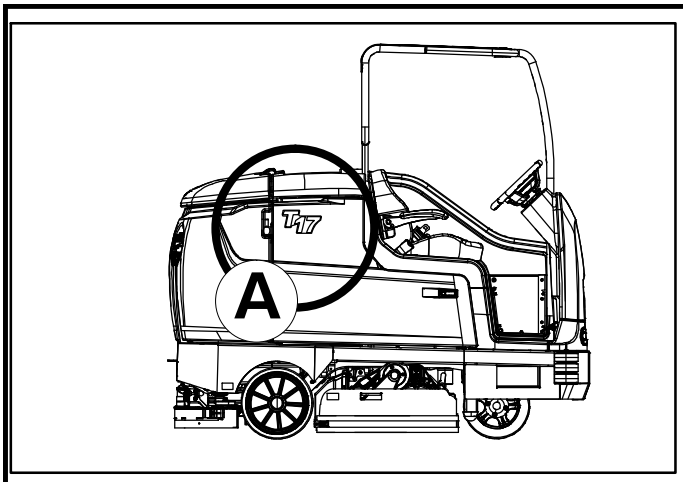

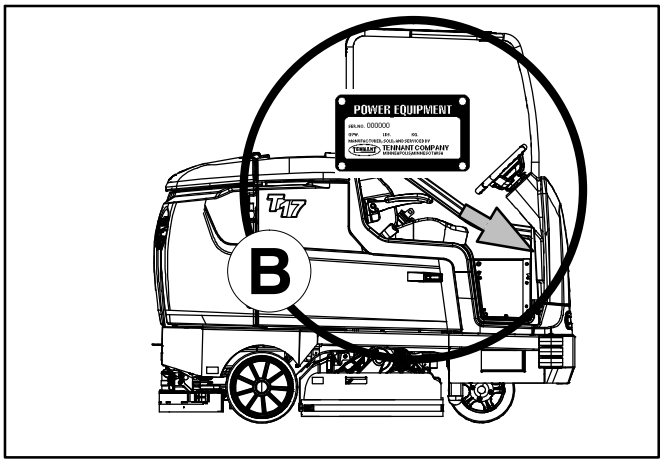

Ref	Part No.	Serial Number	Description	Qty.
1	82681	(000000–)	Bracket Wldt, Lpg Mount	1
▽ 2	63810	(000000–)	Latch Assy, Lpg Tank Mtg, W/Nut	4
▲ 3	51839	(000000–)	Nut Adjustable, Lpg Tank Mtg	2
4	49263	(000000–)	Tie, Cable	3
5	82556	(000000–001039)	Bracket, Vaporizer	1
6	54930	(000000–)	Vaporizer, LPG	1

D

C

EN

HOW TO ORDER PARTS – See diagram above

Only use TENNANT Company supplied or equivalent parts. Parts and supplies may be ordered online, by phone, by fax or by mail.

Follow the steps below to ensure prompt delivery.

1. **(A)** Identify the machine model.
2. **(B)** Identify the machine serial number from the data plate.
3. **(C)** Ensure the proper serial number is used from the parts list.
4. Identify the part number and quantity. Do not order by page or reference numbers.
5. Provide your name, company name, customer ID number, billing and shipping address, phone number and purchase order number.
6. Provide detail shipping instructions.

(D) ▽ – Identifies an assembly
▲ – Identifies parts included in assembly

Please fill out at time of installation for future reference.

Model No. – _____

Serial No. – _____

Machine Options – _____

Sales Rep. – _____

Sales Rep. phone no. – _____

Customer ID Number – _____

Installation Date – _____

Tennant N.V.
Industrielaan 6 5405 AB
P.O. Box 6 5400 AA Uden–The Netherlands
europe@tennantco.com
www.tennantco.com

Specifications and parts are subject to change without notice.

Original Instructions, copyright © 2014 – 2017 TENNANT Company, Printed in The Netherlands

BG

КАК ДА ПОРЪЧВАМЕ ЧАСТИ - Вижте схемата по-горе

Използвайте само части, доставени от TENNANT или техни еквиваленти. Частите и доставките могат да се поръчат онлайн, по телефон, факс или по пощата.

Следвайте долупосочените стъпки, за да си осигурите бърза и точна доставка.

1. **(A)** Посочете модела на машината.
2. **(B)** Посочете серийния номер на машината от табелката с техническите данни.
3. **(C)** Уверете се, че сте използвали точния сериен номер от списъка с части.
4. Посочва номера на частта и количеството. Не поръчвайте части според страницата или референтните номера.
5. Посочете своето име, наименованието на фирмата, клиентския номер, адреса за получаване на сметката и доставката, тел.номер и номера на поръчката.
6. Посочете подробни инструкции за доставката.

(D) ▽ – посочва начин на монтаж
▲ – посочва частите, включени в монтажа

Моля, попълнете по време на монтажа за бъдеща справка.

Модел Э – _____
Сериен Э – _____
Опции на машината – _____
Търговски представител – _____
Тел. Э на търг. представител – _____
Клиентски Э – _____
Дата на монтаж – _____

CZ

OBJEDNÁVÁNÍ DÍLŮ - Viz schéma výše.

Používejte pouze díly dodané společností TENNANT Company nebo jim odpovídající. Díly a materiál lze objednat online, telefonem, faxem nebo poštou.

Aby bylo zajištěno rychlé dodání, postupujte podle kroků uvedených níže.

1. **(A)** Zjistěte model stroje.
2. **(B)** Zjistěte sériové číslo stroje z výrobního štítku.
3. **(C)** Použijte správné sériové číslo ze seznamu dílů.
4. Určete číslo a množství dílů. Neobjednávejte podle stran nebo referenčních čísel.
5. Uveďte jméno, název společnosti, číslo ID zákazníka, fakturační a dodací adresu, telefonní číslo a číslo objednávky.
6. Uveďte podrobné pokyny pro dodání.

(D) ▽ – označuje sestavu
▲ – označuje díly v sestavě

Vyplňte během sestavování pro budoucí potřebu.

Číslo modelu – _____
Sériové číslo – _____
Doplňky zařízení – _____
Obchodní zástupce – _____
Tel. č. obchodního zástupce – _____
Číslo ID zákazníka – _____
Datum instalace – _____

DE

BESTELLEN VON ERSATZTEILEN – Siehe oben stehendes Diagramm.

Verwenden Sie nur von TENNANT gelieferte oder gleichwertige Ersatzteile. Ersatz– und Verschleißteile können online, telefonisch, per Fax oder per E–Mail bestellt werden.

Befolgen Sie für eine umgehende Lieferung die folgenden Schritte.

1. **(A)** Geben Sie das Modell der Maschine an.
2. **(B)** Geben Sie die Seriennummer der Maschine an (auf dem Datenaufkleber).
3. **(C)** Achten Sie darauf, dass die richtigen Seriennummer aus der Ersatzteilliste verwendet wird.
4. Geben Sie die Ersatzteilnummer und die Menge an. Bestellen Sie nicht nach Seitenzahl oder Referenznummern.
5. Geben Sie Ihren Namen, den Firmennamen, die Kundennummer, die Rechnungs– und Lieferadresse, die Telefonnummer und die Einkaufsauftragsnummer an.
6. Erteilen Sie genaue Versandanweisungen.

(D) ▽ – steht für eine Einheit
▲ – steht für Einzelteile einer Einheit

Bitte bei der Inbetriebnahme als Referenzangabe ausfüllen.

ModellNr. – _____
Seriennr. – _____
Maschinenoptionen – _____
Verkäufer – _____
Telefonnummer des Verkäufers – _____
Kundennummer – _____
Installationsdatum – _____

DK

BESTILLING AF RESERVEDELE – Se ovenstående tabel.

Brug kun reservedele, der er fremstillet af TENNANT, eller dele af tilsvarende kvalitet. Reservedele og tilbehør kan bestilles online, pr. telefon, pr. fax eller pr. brev.

Følg nedenstående trin for at sikre hurtig levering.

1. **(A)** Identificér maskinmodellen.
2. **(B)** Identificér maskinens serienummer på datamærkaten.
3. **(C)** Kontrollér, at det rigtige serienummer bruges i reservedelslisten.
4. Identificér reservedelsnummeret og antallet. Bestil ikke efter side– eller referencenumre.
5. Angiv dit navn, firmanavn, kunde–id–nummer, faktureringsadresse og leveringsadresse, telefonnummer og indkøbsordrenummer.
6. Angiv detaljerede instruktioner til forsendelse.

(D) ▽ – identificerer en enhed
▲ – identificerer reservedele i en enhed

Udfyld venligst på installationstidspunktet til fremtidig brug.

Modelnr. – _____
Serienr. – _____
Maskinekstraudstyr – _____
Salgskonsulent. – _____
Salgskonsulentens tlf. – _____
Kunde–id–nr. – _____
Installationsdato – _____

EE

KUIDAS VARUOSI TELLIDA – vaadake alltoodud joonist

Kasutage ainult TENNANT Company poolt tarnitud või samaväärseid varuosi. Varuosi ja tarvikuid saab tellida Interneti, telefoni, faksi või posti teel.

Kiire kohaletoimetamise tagamiseks järgige alltoodud juhiseid.

1. **(A)** Märkige masina mudel.
2. **(B)** Märkige andmesildil olev masina seerianumber.
3. **(C)** Veenduge, et olete valinud varuosade loendist õige seerianumbri.
4. Märkige varuosa number ja kogus.
   Ärge tellige lehekülje– või viitenumbri alusel.
5. Märkige oma nimi, ettevõtte nimi, kliendinumber, arveldus– ja saatmisaadress, telefoninumber ja ostutellimuse number.
6. Lisage täpsed saatmisjuhised.

(D) ∇ – tähistab komplekti
▲ – tähistab komplektis olevaid osii

Palun täitke paigaldamise ajal edaspidiseks viitamiseks.

Mudeli number – _____
Seerianumber – _____
Masina lisavarustus – _____
Müügiesindus – _____
Müügiesinduse telefoninumber – _____
Kliendinumber – _____
Paigaldamise kuupäev – _____

ES

CÓMO SOLICITAR PIEZAS – Consulte el diagrama anterior.

Utilice sólo las piezas suministradas por TENNANT Company o piezas equivalentes. Puede solicitar las piezas a través de internet, por teléfono, por fax o por correo.

Siga los siguientes pasos para que la entrega sea rápida.

1. **(A)** Indique el modelo de máquina.
2. **(B)** Indique el número de serie de la etiqueta de datos.
3. **(C)** Asegúrese de que indica el número de serie correcto de la lista de piezas.
4. Indique la cantidad y el número de la pieza.
   No realice el pedidoindicando el número de página o el de referencia.
5. Incluya su nombre, el nombre de la empresa, el ID de cliente, las direcciones de envío y facturación, el número de teléfono y el número del pedido de compra.
6. Facilite instrucciones de envío.

(D) ∇ – identifica un conjunto
▲ – identifica piezas de un conjunto

Rellene estos datos cuando realice la instalación para utilizarlos como referencia en el futuro.

Nº modelo – _____
Nº serie – _____
Opciones de la máquina – _____
Vendedor – _____
Nº teléfono vendedor – _____
Nº cliente – _____
Fecha de instalación – _____

FI

KUINKA VARAOSIA TILATAAN – katso kuvaa yllä.

Käytä ainoastaan TENNANTIN toimittamia tai niitä vastaavia varaosia. Voit tilata varaosia ja tarvikkeita internetistä, puhelimitse, faksilla tai sähköpostilla.

Noudata seuraavia ohjeita täsmällisen toimituksen varmistamiseksi.

1. **(A)** Katso koneen malli.
2. **(B)** IKatso koneen sarjanumero sen tunnustarrasta.
3. **(C)** Varmista, että osaluettelosta, että käytät oikeaa sarjanumeroa.
4. Katso osanumero ja kappalemäärä. Älä tilaa ilmoittamalla sivu– tai viitenumeroita.
5. Ilmoita nimesi, yrityksesi nimi, asiakasnumero, laskutus– ja toimitusosoite, puhelinnumero ja ostotilauksen numero.
6. Ilmoita yksityiskohtaiset toimitusosoitteet.

(D) ∇ – tarkoittaa kokoonpanoa
▲ – tarkoittaa kokoonpanoon sisältyviä osia

Ole hyvä ja täytä ottaessasi koneen käyttöön myöhempiä tarpeita varten.

Mallinumero – _____
Sarjanumero – _____
Koneen lisävarusteet – _____
Myyntiedustaja – _____
Myyntiedustajan puhelinnumero – _____
Asiakasnumero – _____
Asennuspäivä – _____

FR

COMMENT COMMANDER DES PIÈCES DÉTACHÉES – Voir le schéma ci–dessus.

Utilisez uniquement des pièces fournies par la société TENNANT ou équivalentes. Les pièces et fournitures peuvent être commandées en ligne, par téléphone, fax, ou par courrier.

Suivez les étapes ci–dessous pour assurer une livraison rapide.

1. **(A)** Identifiez le modèle de la machine.
2. **(B)** Identifiez le numéro de série de la machine, à partir de l'étiquette signalétique.
3. **(C)** Assurez–vous que le numéro de série correct est utilisé à partir de la liste de pièces détachées.
4. Identifiez le numéro de pièce et la quantité. Ne commandez pas par page ou numéros de référence.
5. Fournissez votre nom, le nom de votre société, votre numéro d'identification de client, l'adresse de facturation et d'expédition, le numéro de téléphone et le numéro du bon de commande.
6. Fournissez des instructions d'expédition détaillées.

(D) ∇ – identifie un assemblage
▲ – identifie les pièces composant l'assemblage

A remplir au moment de l'installation à titre de référence.

Nº du modèle – _____
Nº de série – _____
Options de la machine – _____
Agent commercial – _____
Nº tél. de l'agent commercial – _____
Numéro d'identification client – _____
Date d'installation – _____

GR

ΤΡΟΠΟΣ ΠΑΡΑΓΓΕΛΙΑΣ ΑΝΤΑΛΛΑΚΤΙΚΩΝ - Βλ. παραπάνω διάγραμμα.

Χρησιμοποιήστε μόνο ανταλλακτικά παρεχόμενα από την TENNANT Company ή ισοδύναμα. Τα ανταλλακτικά και αναλώσιμα μπορούν να παραγγελθούν online, τηλεφωνικά, με φαξ ή ταχυδρομικά.

Ακολουθήστε τα παρακάτω βήματα για να εξασφαλίσετε την έγκαιρη αποστολή τους.

1. **(A)** Βρείτε το μοντέλο μηχανήματος.
2. **(B)** Βρείτε τον αριθμό σειράς του μηχανήματος από την ετικέτα στοιχείων.
3. **(C)** Βεβαιωθείτε ότι χρησιμοποιείται ο σωστός αριθμός σειράς από τον κατάλογο ανταλλακτικών.
4. Βρείτε κωδικό ανταλλακτικού και ποσότητα. Μην παραγγέλνετε βάσει σελίδας ή αριθμών αναφοράς.
5. Δώστε το όνομα σας, όνομα εταιρείας, ID (κωδικό) πελάτη, διεύθυνση τιμολόγησης και αποστολής, αριθμό τηλεφώνου και αριθμό εντολής προμήθειας.
6. Δώστε λεπτομερείς πληροφορίες αποστολής.

(D) ▽ – υποδηλώνει υποσύστημα
▲ – υποδηλώνει τα μέρη που περιλαμβάνονται στο υποσύστημα

Παρακαλούμε συμπληρώστε κατά την ώρα της εγκατάστασης για μελλοντική αναφορά.

Αρ. Μοντέλου – _____
Αρ. σειράς – _____
Επιλογές Μηχανήματος – _____
Εκπ. πωλήσεων – _____
Τηλ. εκπροσώπου πωλήσεων – _____
Αριθμός πελάτη – _____
Ημερομηνία εγκατάστασης – _____

HU

HOGYAN RENDELJÜNK ALKATRÉSZEKET - Lásd: fenti diagramm.

Kizárólag TENNANT vagy azzal egyenértékű cserealkatrészeket használjon. Az alkatrészeket és anyagokat meg lehet rendelni az Interneten keresztül, vagy telefonon, faxon és e-mailben.

A pontos szállítás érdekében kövesse az alábbi lépéseket.

1. **(A)** Adja meg a gép típusát.
2. **(B)** Az adatcímke alapján adja meg a gép gyártási számát.
3. **(C)** Ügyeljen arra, hogy a megfelelő gyártási számot válassza ki az alkatrészlistáról.
4. Adja meg a rendelési számot és a mennyiséget. A rendeléshez ne az oldalszámot vagy a hivatkozási számot használja.
5. Adja meg a nevét, a cége nevét, az ügyfélazonosító számát, a számlázási és szállítási címét, a telefonszámát és a rendelési számot.
6. Adjon részletes szállítási utasításokat.

(D) ▽ – a jel csomagra utal
▲ – a jel a csomagban található alkatrészekre utal

A későbbi visszakeresések érdekében kérjük, hogy a rovatokat az első üzembehelyezéskor töltse ki.

Típusszám – _____
Gyártási szám. – _____
A gép felszereltsége – _____
Kereskedelmi képviselő – _____
Kereskedelmi képviselő telefonszáma – _____
Ügyfél azonosító száma – _____
Üzembehelyezés dátuma – _____

IT

COME ORDINARE LE PARTI – Vedere schema precedente.

Utilizzare solo ricambi forniti da TENNANT o equivalenti. Ricambi e forniture possono essere ordinati online, per telefono, via fax o per posta elettronica.

Per ottenere una consegna rapida, seguire i passaggi indicati di seguito.

1. **(A)** Identificare il modello della macchina.
2. **(B)** Identificare il numero di serie della macchina dall'etichetta dei dati.
3. **(C)** Utilizzare il numero di serie corretto presente nell'elenco delle parti di ricambio.
4. Identificare numero di parte e quantità. Non ordinare per numero di pagina o di riferimento.
5. Fornire nome del contatto, nome della società, numero di ID cliente, indirizzo di fatturazione e di spedizione, numero di telefono e numero di ordine di acquisto.
6. Fornire istruzioni dettagliate per la spedizione.

(D) ▽ – identifica un gruppo
▲ – identifica parti comprese in un gruppo

Compilare il modulo al momento dell'installazione per poterlo consultare in futuro in caso di necessità.

N. Modello – _____
N. Serie – _____
Opzioni della macchina – _____
Venditore – _____
Tel. venditore – _____
Numero ID cliente – _____
Data di installazione – _____

LT

KAIP UŽSISAKYTI DALIS — žr. diagramà viršuje

Naudokite tik "Tennant" kompanijos tiekiamas arba lygiavertes joms dalis. Dalis galite užsisakyti internetu, telefonu, faksu bei elektroniniu paštu.

Kad užsakymas būtų greitai įvykdytas, laikykitės išvardytų taisyklių.

1. **(A)** Nurodykite mašinos modelį.
2. **(B)** Norodykite mašinos serijos numerį, kurį rasite ant duomenų žymės.
3. **(C)** Įsitikinkite, kad nurodomas tikslus serijos numeris iš dalių sąrašo.
4. Nurodykite dalies numerį ir reikiamą kiekį. Neužsakinėkite pagal puslapius ar nuorodos numerius.
5. Nurodykite savo vardą, kompanijos pavadinimą, kliento ID numerį, sąskaitos išrašymo ir vežimo adresą, telefono numerį ir pirkimo užsakymo numerį.
6. Nurodykite išsamias gabenimo instrukcijas.

(D) ▽ — žymi sistemą
▲ — nurodo sistemos dalis

Prašome užpildyti montavimo metu, siekiant gauti informacijà ateityje.

Modelio nr. — _____
Serijos nr. — _____
Mašinos parinktys — _____
Prekybos atstovas — _____
Komivojažieriaus tel. nr. — _____
Pirkėjo ID numeris — _____
Sumontavimo data — _____

LV

KĀ PASŪTĪT REZERVES DETAĻAS — Skat. diagrammu iepriekš

izmantojiet tikai TENNANT Company piegādātās vai tām līdzvērtīgas rezerves detaļas. Daļas un piegādi var pasūtīt internetā, pa tālruni, pa faksu vai pastu.

Lai nodrošinātu savlaicīgu piegādi, sekojiet zemāk aprakstītajiem soļiem.

1. **(A)** Nosakiet mašīnas modeli.
2. **(B)** Nosakiet mašīnas sērijas numuru uz tehnisko datu uzlīmes.
3. **(C)** Pārliecinieties, ka tiek uzrakstīts attiecīgais sērijas numurs no detaļu saraksta.
4. Nosakiet detaļas numuru un skaitu.
   Veicot pasūtījumus neatsaucieties uz lappušu vai norādes numuriem.
5. Uzrakstiet savu vārdu, uzņēmuma nosaukumi, klienta identitātes numuru, adresi rēķina piesūtīšanai un piegādei un pirkuma pasūtījuma numuru.
6. Sniedziet detalizētu informāciju par piegādi.

(D) ∇ – nosaka ierīci i
▲ – nosaka detaļas, kas ir komplektā ar ierīci

Veicot uzstādīšanu, lūdzam pierakstīst attiecīgo informāciju izmantošanai turpmāk.

Modeļa Nr. – _____
Sērijas Nr. – _____
Iekārtas papildaprīkojums– _____
Pārdošanas pārst. – _____
Pārdošanas pārst. tālr. Nr. – _____
Klienta identitātes numuru– _____
Uzstādīšanas datums– _____

NL

HOE ONDERDELEN TE BESTELLEN – Zie schema hierboven.

Gebruik alleen onderdelen die door TENNANT Company zijn geleverd of soortgelijke onderdelen. Onderdelen en voorraden kunnen online, per telefoon, fax of schriftelijk besteld worden.

Volg de stappen hieronder om een juiste levering te garanderen.

1. **(A)** Bepaal het machinemodel.
2. **(B)** Lees het serienummer van de machine af van het gegevenslabel.
3. **(C)** Zorg dat het juiste serienummer wordt gebruikt uit de onderdelenlijst.
4. Bepaal het artikelnummer en het aantal. Bestel niet aan de hand van pagina's of referentienummers
5. Geef uw naam, bedrijfsnaam, klantnummer, factuur– en leveringsadres, telefoonnummer en bestelnummer op.
6. Geef gedetailleerde leveringsinstructies op.

(D) ∇ – geeft een eenheid aan
▲ – geeft de onderdelen van de eenheid aan

Vul tijdens installatie de onderstaande gegevens in voor eventueel toekomstig gebruik.

Modelnr. – _____
Serienr. – _____
Machine–opties – _____
Verkoopvert. – _____
Telnr. verkoopvert. – _____
Klantnummer – _____
Installatiedatum – _____

NO

HVORDAN BESTILLE DELER – Se diagram over.

Bruk kun deler levert av TENNANT Company eller ekvivalente deler. Deler og forsyninger kan bestilles online, per telefon, per faks eller per post.

Følg trinnene under for å sikre rask levering.

1. **(A)** Angi maskinmodellen.
2. **(B)** Angi maskinens serienummer fra typeskiltet.
3. **(C)** Forsikre deg om at korrekt serienummer brukes fra delelisten.
4. Angi delenummer og antall. Bestill ikke ut fra side– eller referansenumre.
5. Angi ditt navn, firmanavn, kunde–ID–nummer, fakturerings– og forsendelsesadresse, telefonnummer og innkjøpsordrenummer.
6. Angi detaljerte forsendelsesinstruksjoner.

(D) ∇ – angir en delegruppe
▲ – angir deler inkludert i en delegruppe

Fyll ut ved installasjonstidspunkt for fremtidig bruk.

Modellnr. – _____
Serienr.. – _____
Maskinens tillegg – _____
Salgsrep. – _____
Salgsrep. telefonnr. – _____
Kunde–ID–nummer – _____
Installasjonsdato – _____

PL

JAK ZAMAWIAĆ CZĘŚCI - patrz schemat powyżej.

Należy używać wyłącznie części dostarczanych przez firmę TENNANT Company lub równoważnych. Części i dostawy mogą być zamawiane online, przez telefon, faksem lub pocztą.

Aby zapewnić szybką dostawę, należy przestrzegać następujących wskazówek.

1. **(A)** Określić model maszyny.
2. **(B)** Określić numer seryjny maszyny znajdujący się na tabliczce znamionowej.
3. **(C)** Odszukać ten numer seryjny w wykazie części.
4. Określić numer części i ilość. Nie zamawiać na podstawie numeru strony lub liczby porządkowej wykazu.
5. Podać swoje nazwisko, nazwę firmy, numer identyfikacyjny klienta, adres dostawy i dostarczenia rachunku, numer telefonu i numer zamówienia zakupu.
6. Podać dokładne instrukcje dotyczące dostawy.

(D) ∇ – oznacza zespół
▲ – oznacza część w zespole

Prosimy wpisać datę instalacji do późniejszego wykorzystania.

Nr modelu– _____
Nr seryjny – _____
Opcje maszyny – _____
Przedst. sprzedaży – _____
Nr tel. przedst. sprzed. – _____
Nr ident. klienta – _____
Data instalacji – _____

PT G

COMO ENCOMENDAR PEÇAS – Consulte o diagrama acima.

Utilize apenas peças fornecidas pela TENNANT Company ou equivalentes. As peças e consumíveis podem ser encomendados online, por telefone, fax ou correio.

Siga os passos abaixo para garantir uma entrega rápida.

1. **(A)** Identifique o modelo da máquina.
2. **(B)** Identifique o número de série da máquina que se encontra na etiqueta de dados.
3. **(C)** Certifique–se de que usa o número de série correcto da lista de peças.
4. Identifique o número de produto e a quantidade. Não encomende através de números de página ou de referência.
5. Forneça o seu nome, o nome da empresa, o número de ID do cliente, os endereços de facturação e entrega, o número de telefone e o número da nota de encomenda.
6. Forneça instruções de entrega detalhadas.

(D) ▽ – identifica uma unidade
▲ – identifica peças incluídas numa unidade

Preencha na altura da instalação para futura referência.

Modelo nº – _____
Nº de série – _____
Opções da máquina – _____
Vendedor – _____
Telefone do vendedor – _____
Número de ID do cliente – _____
Data de instalação – _____

RU

КАК ЗАКАЗАТЬ ЗАПЧАСТИ - См. схему ниже.

Используйте только запчасти, поставляемые компанией TENNANT или их аналоги. Запасные части и расходные материалы можно заказать в режиме онлайн, телефоном, факсом или электронной почтой.

Для своевременной доставки следуйте описанным ниже инструкциям.

1. **(A)** Укажите модель машины.
2. **(B)** Укажите серийный номер машины, обозначенный на табличке технических данных.
3. **(C)** Удостоверьтесь, что надлежащий серийный номер перечислен в списке запчастей.
4. Укажите номер детали и нужное количество. Не используйте номера страниц или ссылок.
5. Укажите свое имя, название компании, идентификационный номер покупателя, расчетный адрес и адрес доставки, телефонный номер и номер заказа на покупку.
6. Укажите подробные сведения о доставке.

(D) ▽ – означает узел
▲ – обозначает деталь узла

Во время установки заполните, пожалуйста, эти сведения для того, чтобы ссылаться в дальнейшем.

Модель Э – _____
Серийный Э – _____
Опции машины – _____
Торговый представитель – _____
Телефон торгового представителя – _____
Идент. номер покупателя – _____
Дата установки – _____

SE

BESTÄLLNING AV RESERVDELAR – Se ovanstående schema.

Använd endast delar från Tennant Company eller likvärdiga. Delar och material kan beställas online, telefoniskt, per fax eller post.

Följ nedanstående steg för en snabb leverans.

1. **(A)** Identifiera maskinens modell.
2. **(B)** Identifiera maskinens serienummer på typskylten.
3. **(C)** Kontrollera att rätt serienummer används från dellistan.
4. Identifiera artikelnumret och mängden. Beställ inte med hjälp av sido– eller referensnummer.
5. Uppge ditt namn, företagets namn, kundens ID–nummer, faktura– och leveransadress, telefonnummer och ordernumret vid inköp.
6. Ge detaljerade transportanvisningar.

(D) ▽ – identifierar en modul
▲ – identifierar delar som ingår i en modul

Fyll i vid installation och spar för framtida bruk.

Modellnr. – _____
Serienr. – _____
Tilvalsutrustning – _____
Försäljare – _____
Försäljarens tel.nr. – _____
Kundnummer – _____
Installationsdatum – _____

SK

POSTUP PRI OBJEDNÁVANÍ ČASTÍ - Pozri vyššie uvedený diagram.

Využívajte výhradne dielce dodané spoločnosťou TENNANT, alebo ich ekvivalenty. Dielce a položky je možné objednať online, telefonicky, faxom, alebo poštou.

Na zabezpečenie promptného doručenia sa riaďte nasledovnými krokmi.

1. **(A)** Identifikujte model stroja.
2. **(B)** Z etikety s údajmi identifikujte sériové číslo stroja.
3. **(C)** Ubezpečte sa, že ste zadali správne sériové číslo zo zoznamu dielcov.
4. Identifikujte číslo dielu a množstvo. Neobjednávajte pomocou čísel strán, alebo referenčných čísel.
5. Zadajte Vaše meno, meno spoločnosti, ID číslo zákazníka, fakturačnú a prepravnú adresu, telefónne číslo a objednávacie číslo dielu.
6. Uveďte podrobné prepravné pokyny.

(D) ▽ – identifikuje sadu
▲ – identifikuje časti sady

Vyplňte prosím pri inštalácii pre prípad potreby v budúcnosti.

č. modelu – _____
Sériové č. – _____
Zvláštne príslušenstvo stroja – _____
Obchodné zastúpenie – _____
Obch. zastúpenie tel. č. – _____
ID č. zákazníka – _____
Dátum inštalácie – _____

SL

NAROČANJE NADOMESTNIH DELOV - glejte zgornjo sliko.

Uporabljajte samo originalne nadomestne dele Tennant ali enakovredne dele. Dele in potrošni material lahko naročite prek spleta, po telefonu, faksu ali pošti.

Za zagotovitev čimbolj hitre dostave sledite spodnjim navodilom.

1. **(A)** Ugotovite model stroja.
2. **(B)** Na ploščici s podatki poiščite serijsko številko stroja.
3. **(C)** Poskrbite, da na seznamu nadomestnih delov poiščete pravilno serijsko številko.
4. Poiščite številko dela in potrebno količino. Pri naročilih ne navajajte strani ali referenčne številke.
5. Navedite svoje ime, ime podjetja, ID številko stranke, naslova za dostavo in izdajo računa, telefonsko številkoin številko naročila.
6. Navedite podrobna navodila za dostavo.

(D) ▽ – označuje sklop
▲ – označuje dele sklopa

Prosimo, da ob vgradnji izpolnite te podatke, da vam bodo v prihodnje na voljo.

Št. modela – _____

Serijska številka – _____

Dodatna oprema stroja – _____

Prodajni predstavnik – _____

Telefonska št. prodajnega predstavnika – _____

Številka stranke – _____

Datum vgradnje – _____

TR

PARÇALARIN SİPARİŞ EDİLMESİ - Yukarıdaki şemaya bakın.

Yalnızca TENNANT Company'den sağlanan veya eşdeğerde parçalar kullanın. Parça veya sarf malzemeleri çevrimiçi olarak, telefonla, faksla veya postayla sipariş edilebilir.

Zamanında teslimatı sağlamak için aşağıdaki adımları izleyin.

1. **(A)** Makine modelini belirtin.
2. **(B)** Veri etiketinden makine seri numarasını belirtin.
3. **(C)** Parça listesinden uygun seri numarasının kullanıldığından emin olun.
4. Parça numarasını ve miktarını belirtin. Sayfa veya referans numaralarını kullanarak sipariş vermeyin.
5. Adınızı, şirketinizin adını, müşteri kimlik numaranızı, faturalama ve sevkıyat adreslerini, telefon numarasını ve satın alma siparişi numarasını belirtin.
6. Ayrıntılı sevkıyat talimatlarını belirtin.

(D) ▽ – bir tertibatı belirtir
▲ – tertibattaki parçaları belirtir

İleri tarihlerde başvurmak için lütfen kurulum sırasında doldurun.

Model No. - _____

Seri No. - _____

Makine Seçenekleri - _____

Satış Temsilcisi - _____

Satış Temsilcisi telefon no. - _____

Müşteri Kimlik Numarası - _____

Kurulum Tarihi - _____

CE

General Recommended Maintenance Items

	Ref.	Part No.	Serial Number	Description	Qty.
▽		9020270	(000000–)	Service Kit [T17]	1
▲		1207086	(000000–)	Blade, Front Squeegee 56.6l (Linard)	1
▲		1207087	(000000–)	Blade, Rear Squeegee 60.6l (Linatex)	1
▲		1213211	(000000–)	Blade, Sqge, Side, Linatex	2
▲		1037822	(000000–)	Filter, Panl, Dust, 2.0 X 06.1 X 07.6	1
▲		1206370	(000000–)	Hose Assy, Drain, 3.0 Id 35 L	1
▲		1207661	(000000–)	Hose Assy, Rear Squeegee	1
▲		9020233	(000000–)	Caster Assy, Sq, Rear, Afmkt [T17]	2
▽		9020271	(000000–)	Squeegee Kit, Rear_Side, Linatex [T17]	1
▲		1207086	(000000–)	Blade, Front Squeegee 56.6l (Linard)	1
▲		1207087	(000000–)	Blade, Rear Squeegee 60.6l (Linatex)	1
▲		1213211	(000000–)	Blade, Sqge, Side, Linatex	2
▽		9020272	(000000–)	Squeegee Kit, Rear_Side, Urethane [T17]	1
▲		1208356	(000000–)	Blade, Front Squeegee 56.6l (Urethane)	1
▲		1208357	(000000–)	Blade, Rear Squeegee 60.6l (Urethane)	1
▲		1213266	(000000–)	Blade, Sqge, Side, Ure	2
		1067452	(000000–)	Bag, Vacuum, Paper [1pick=1pkg(=10pc)]	1
		361144	(000000–)	Key, Ignition, Sgl	1
▽		9020237	(000000–)	Belt, Kit, Cyl, Afmkt [T17]	2
▲		1204640	(000000–)	Belt, Drive	1
▲		1212849	(000000–)	Tool, Installation, Belt	1

SECTION 2

Contents **Page**

Fig. 1 – Replacement Brushes, Scrub Head 2-2
Fig. 2 – Replacement Brushes, Side Brush and Pre–Sweep 2-4
Fig. 3 – Main Frame Group 2-6
Fig. 4 – Front Covers and Directional Pedal Group 2-8
Fig. 5 – Steering Group 2-10
Fig. 6 – Brake Pedal Group 2-12
Fig. 7 – Instrument Panel and Front Electrical Group 2-14
Fig. 8 – Seat Group 2-16
Fig. 9 – Deluxe Seat Kit 2-18
Fig. 10 – Drive Wheel Group (0000–0399) 2-20
Fig. 11 – Drive Wheel Group (0400–) 2-22
Fig. 12 – Drive Wheel Electrical Group (0000–0399) 2-24
Fig. 13 – Drive Wheel Electrical Group (0400–) 2-26
Fig. 14 – Rear Wheels and Brake Group 2-28
Fig. 15 – Scrub Head Lift Group 2-30
Fig. 16 – Scrub Head and Drive Motor Group, Disk 2-32
Fig. 17 – Scrub Head Frame Group, Cylindrical 2-34
Fig. 18 – Scrub Head Drive Motors Group, Cylindrical 2-36
Fig. 19 – Scrub Head Side Squeegee Group, Right Hand 2-38
Fig. 20 – Scrub Head Side Squeegee Group, Left Hand 2-40
Fig. 21 – Solution Tank Group 2-42
Fig. 22 – Solution Supply Group 2-44
Fig. 23 – Recovery Tank Group 2-46
Fig. 24 – Tank Drains Group 2-48
Fig. 25 – Vacuum Fans and Rear Side Door Group 2-50
Fig. 26 – Rear Squeegee Lift Group 2-52
Fig. 27 – Rear Squeegee Linkage Group 2-54
Fig. 28 – Rear Squeegee Group 2-56
Fig. 29 – Right Hand Door and Battery Cover Group 2-58
Fig. 30 – Electrical Box Group 2-60
Fig. 31 – Electrical Schematic Group (0000–0399) 2-63
Fig. 32 – Electrical Schematic (0400–) 2-69
Fig. 33 – Wire Harnesses Group 2-75
Fig. 34 – Label Group 2-81

Fig. 1 – Replacement Brushes, Scrub Head

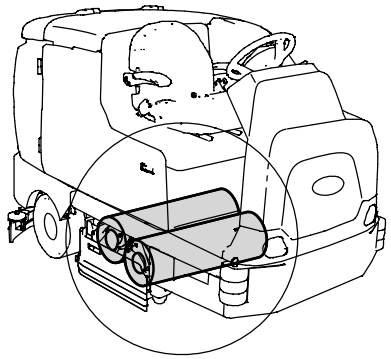

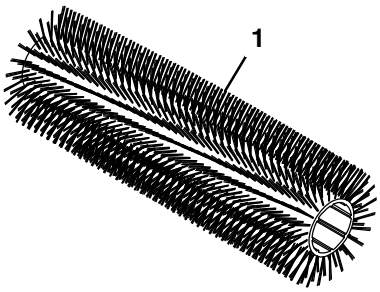

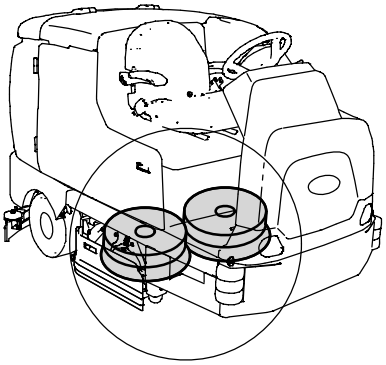

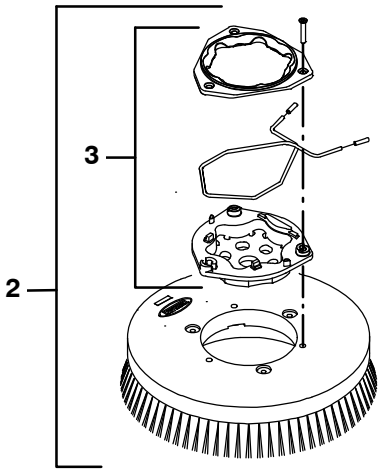

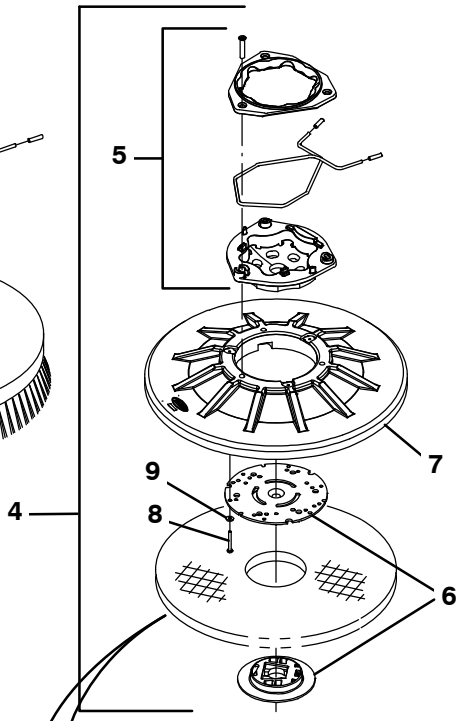

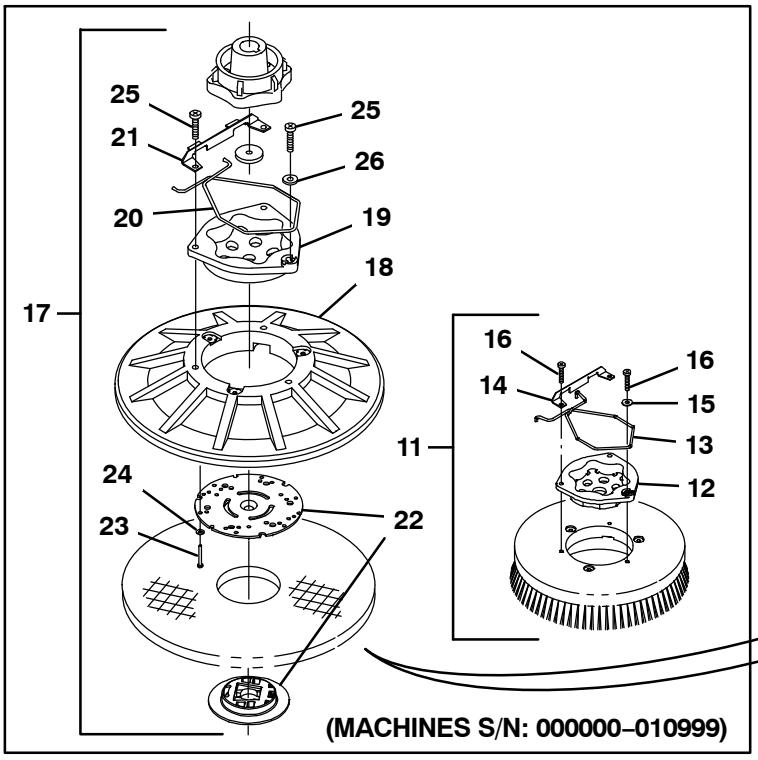

356504–CE

Fig. 1 – Replacement Brushes, Scrub Head

	Ref.	Part No.	Serial Number	Description	Qty.
	1	386230	(0000–)	Brush, Scrub, 39l, 20sr, Polypropylene, Spline	2
	1	386240	(0000–)	Brush, Scrub, 39l, 20sr, Super Abrasive, Spline	2
	1	386250	(0000–)	Brush, Scrub, 39l, 20sr, Nylon, Spl	2
▽	2	1223636	(0400–)	Brush Assy, Disk, Scb, 20.0d, Nylon	2
▲	3	9014666	(0400–)	Brush Kit, Hub Assy, Drive, Ci [Uhmw]	1
▽	2	1223637	(0400–)	Brush Assy, Disk, Scb, 20.0d, Polypropylene	2
▲	3	9014666	(0400–)	Brush Kit, Hub Assy, Drive, Ci [Uhmw]	1
▽	2	1223639	(0400–)	Brush Assy, Disk, Scb, 20.0d, Super Abrasive	2
▲	3	9014666	(0400–)	Brush Kit, Hub Assy, Drive, Ci [Uhmw]	1
▽	4	1223638	(0400–)	Driver Assy, Pad, 20.0d	2
▲	5	9014666	(0400–)	Brush Kit, Hub Assy, Drive, Ci [Uhmw]	1
▲	6	370095	(0400–)	Device, Centering, Clip On, Tl [Gf Pp]	1
▲	7	397980	(0400–)	Disk, Driver, Pad, W/ Face, 20.0d	1
▲	8	19859	(0400–)	Adhesive, Thread, 50.0ml [271red]	3
▲	9	09198	(0400–)	Screw, Pan, Phl, M4 X 0.70 X 35, Ss	3
	10	17260	(0000–)	Pad, Polish, 20.0d, White [1 Pick = 1 Pad]	2
	10	17261	(0000–)	Pad, Buff, 20.0d, Red [1 Pick = 1 Pad]	2
	10	17262	(0000–)	Pad, Scrub, 20.0d, Blue [1 Pick = 1 Pad]	2
	10	17263	(0000–)	Pad, Stripping, 20.0d, Brown [1 Pick = 1 Pad]	2
	10	370094	(0000–)	Pad, Stripping, 20.0D, Black [High Prod}[1 Pick = 1 Pad]	2
	10	1051030	(0000–)	Pad, Surf Prep, 20.0D Maroon, [1Pick=1Pad]	2
▽	11	14967	(0000–0399)	Brush Assy, Disk, Scrub, 20.0 D, Nylon	2
▲	12	15539	(0000–0399)	Adaptor, Brush	1
▲	13	14838	(0000–0399)	Spring, Wir, 0.16d, Brush Retaining	1
▲	14	24299	(0000–0399)	Bracket, Retainer, Spring	1
▲	15	01684	(0000–0399)	Washer, Flt, .25 Ss	1
▲	16	32746	(0000–0399)	Screw, Pan, M06 X 1.0 X 35, Ss	3
▽	11	14953	(0000–0399)	Brush Assy, Disk, Scrub, 20.0 D, Polypropylene	2
▲	12	15539	(0000–0399)	Adaptor, Brush	1
▲	13	14838	(0000–0399)	Spring, Wir, 0.16d, Brush Retaining	1
▲	14	24299	(0000–0399)	Bracket, Retainer, Spring	1
▲	15	01684	(0000–0399)	Washer, Flt, .25 Ss	1
▲	16	32746	(0000–0399)	Screw, Pan, M06 X 1.0 X 35, Ss	3
▽	11	378951	(0000–0399)	Brush Assy, Disk, Scrub, 20.0 D, Super Abrasive	2
▲	12	15539	(0000–0399)	Adaptor, Brush	1
▲	13	14838	(0000–0399)	Spring, Wir, 0.16d, Brush Retaining	1
▲	14	24299	(0000–0399)	Bracket, Retainer, Spring	1
▲	15	01684	(0000–0399)	Washer, Flt, .25 Ss	1
▲	16	32746	(0000–0399)	Screw, Pan, M06 X 1.0 X 35, Ss	3
▽	17	397920	(0000–0399)	Driver Assy, Pad, 20.0D	2
▲	18	370080	(0000–0399)	Disk, Pad Drive, W/ Face, 20d	1
▲	19	15539	(0000–0399)	Adaptor, Brush	1
▲	20	14838	(0000–0399)	Spring, Wir, 0.16d, Brush Retaining	1
▲	21	24299	(0000–0399)	Bracket, Retainer, Spring	1
▲	22	370090	(0000–0399)	Device, Centering	1
▲	23	09198	(0000–0399)	Screw, Pan, M04 X 0.7 X 35, Ss	3
▲	24	41579	(0000–0399)	Washer, Flt, #08 Ss	3
▲	25	32746	(0000–0399)	Screw, Pan, M06 X 1.0 X 35, Ss	3
▲	26	01684	(0000–0399)	Washer, Flt, .25 Ss	1

Fig. 2 – Replacement Brushes, Side Brush and Pre–Sweep

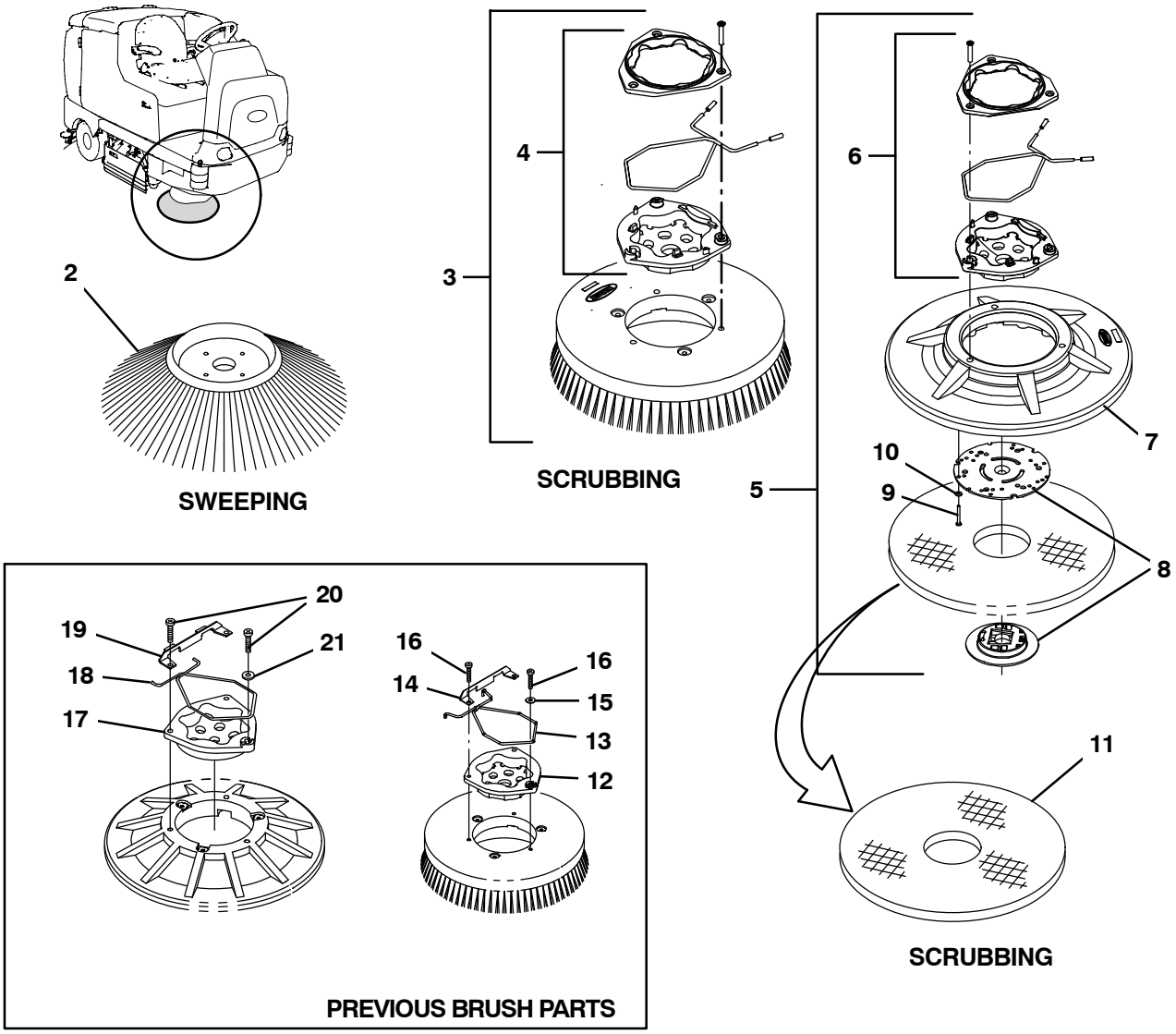

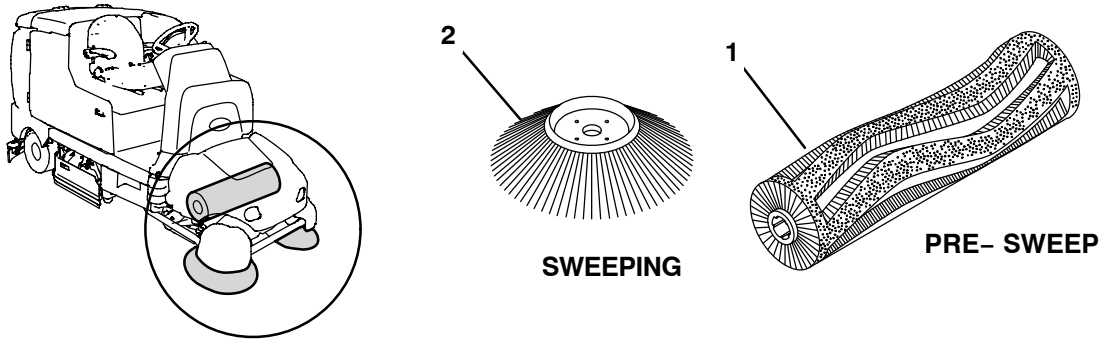

356505–CE

Fig. 2 – Replacement Brushes, Side Brush and Pre–Sweep

	Ref.	Part No.	Serial Number	Description	Qty.
	1	1211934	(0000–)	Brush, Sweep, 28L, Wedge, Polypropylene	1
	2	87419	(0000–)	Brush, Disk, Sweep, 19.0D, Polypropylene	2
▽	3	1223630	(0000–)	Brush Assy, Disk, Scb, 16.0d, Super Abrasive	1
▲	4	9014662	(0000–)	Brush Kit, Hub Assy, Drive, Ci [Hdpe In]	1
▽	3	1223631	(0000–)	Brush Assy, Disk, Scb, 16.0d, Nylon	1
▲	4	9014662	(0000–)	Brush Kit, Hub Assy, Drive, Ci [Hdpe In]	1
▽	3	1223623	(0000–)	Brush Assy, Disk, Scb, 16.0d, Polypropylene	1
▲	4	9014662	(0000–)	Brush Kit, Hub Assy, Drive, Ci [Hdpe In]	1
▽	3	1223628	(0000–)	Brush Assy, Disk, Scb, 16.0d, Heavy Duty Polypropylene	1
▲	4	9014662	(0000–)	Brush Kit, Hub Assy, Drive, Ci [Hdpe In]	1
▽	5	1223629	(0000–)	Driver Assy, Pad, 16.0d	1
▲	6	9014664	(0000–)	Brush Kit, Hub Assy, Drive, Ci [Hdpe]	1
▲	7	1016672	(0000–)	Disk, Driver, Pad, W/ Face, 16.0d	1
▲	8	370095	(0000–)	Device, Centering, Clip On, Tl [Gf Pp]	1
▲	9	09198	(0000–)	Screw, Pan, Phl, M4 X 0.70 X 35, Ss	1
▲	10	41579	(0000–)	Washer, Flat, 08, Ss	1
	11	63248–1	(0000–)	Pad, Stripping, 16.0d, Brown [1 Pick = 1 Pad]	1
	11	63248–2	(0000–)	Pad, Scrub, 16.0d, Blue [1 Pick = 1 Pad]	1
	11	63248–3	(0000–)	Pad, Buff, 16.0d, Red [1 Pick = 1 Pad]	1
	11	63248–4	(0000–)	Pad, Polish, 16.0d, White [1 Pick = 1 Pad]	1
	11	370092	(0000–)	Pad, Stripping, 16.0d, Black [High Prod] [1 Pick = 1 Pad]	1
	11	1051027	(0000–)	Pad, Surf Prep, 16.0d, Maroon [1pick=1pad]	1
	12	1017368	(0000–)	Hub, Drive, Brush, Disk, 3 Hole 5.8Bc	1
	13	14838	(0000–)	Spring, Wir, 0.16d, Brush Retaining	1
	14	24299	(0000–)	Bracket, Retainer, Spring	1
	15	01684	(0000–)	Washer, Flt, .25 Ss	1
	16	32746	(0000–)	Screw, Pan, M06 X 1.0 X 35, Ss	3
	17	15539	(0000–)	Adaptor, Brush	1
	18	14838	(0000–)	Spring, Wir, 0.16d, Brush Retaining	1
	19	24299	(0000–)	Bracket, Retainer, Spring	1
	20	32746	(0000–)	Screw, Pan, M06 X 1.0 X 35, Ss	3
	21	01684	(0000–)	Washer, Flt, .25 Ss	1
		1042504	(0000–)	Brush Assy, Disk, Scrub, 16.0D, Super Abrasive (Replaced by 1223630)	1
		1042499	(0000–)	Brush Assy, Disk, Scrub, 16.0D, Nylon (Replaced by 1223631)	1
		30241	(0000–)	Brush Assy, Disk, Scrub, 16.0 D, Polypropylene (Replaced by 1223623)	1
		1042500	(0000–)	Brush Assy, Disk, Scrub, 16.0D, Heavy Duty Polypropylene (Replaced by 1223628)	1
		397916	(0000–)	Driver Assy, Pad, 16D (Replaced by 1223629)	1

Fig. 3 – Main Frame Group

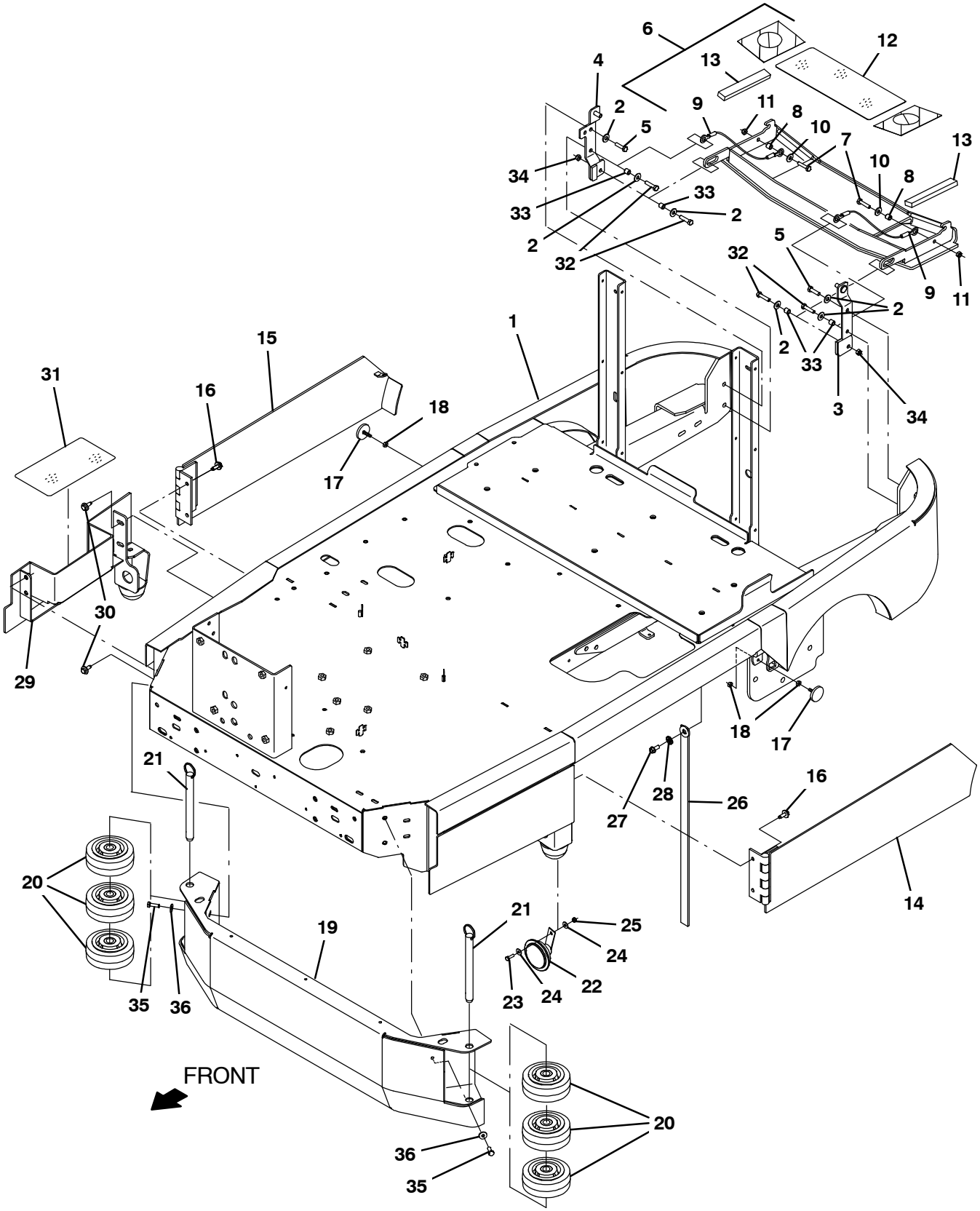

356415

Fig. 3 – Main Frame Group

	Ref.	Part No.	Serial Number	Description	Qty.
	1	1205154	(0000–0399)	Frame Wldt, Main [T17]	1
	1	1221285	(0400–)	Frame Wldt, Main [T17]	1
	2	01685	(0000–)	Washer, Flat, 0.38b 0.88d .08, Ss	8
	3	1208363	(0000–)	Bracket Wldt, Lh, Mtg, Door	1
	4	1208364	(0000–)	Bracket Wldt, Rh, Mtg, Door	1
	5	09011	(0000–)	Screw, Hex, M8 X 1.25 X 30, Ss	2
▽	6	9020273	(0000–)	Bumper Kit, Rear, Afmkt [T17]	1
▲	7	09023	(0000–)	Screw, Hex, M8 X 1.25 X 35, Fl, Ss	2
▲	8	222516	(0000–)	Sleeve, P/m 0.32B 0.50D 0.3L [430Ss]	2
▲	9	87172	(0000–)	Cable, Glv .13d 010.0l .52eye /.52eye	2
▲	10	01685	(0000–)	Washer, Flat, 0.38b 0.88d .08, Ss	2
▲	11	08713	(0000–)	Nut, Hex, Lock, M8 X 1.25, Nl, Ss	2
▲	12	1210711	(0000–)	Tread, Non–Skid–Step, 5.5w 13.8l	1
▲	13	1212350	(0000–)	Bumper, Strip. 1.0	2
	14	1205863	(0000–)	Door Wldt, Brush, Lh	1
	15	1205864	(0000–)	Door Wldt, Brush, Rh	1
	16	1037346	(0000–)	Screw, Hex, M8 X 1.25 X 25, 9.8, Sems	4
	17	1202779	(0000–)	Magnet, Latch, Brush Door	2
	18	19312	(0000–)	Nut, Hex, Std, .25–20	4
	19	1205257	(0000–)	Channel Wldt, Bumper	1
	20	1052962	(0000–)	Wheel, 05.0d 2.00w 0.75b, Gray, W/ Bshg	6
	21	1206367	(0000–)	Pin, Hitch, .750d X 7.00l, Pl	2
	22	1057780	(0000–)	Horn, 36vdc, 110dba	1
	23	08716	(0000–)	Screw, Hex, M6 X 1.00 X 20, Ss	1
	24	01684	(0000–)	Washer, Flat, 0.27b 0.69d .05, Ss	2
	25	08712	(0000–)	Nut, Hex, Lock, M6 X 1.00, Nl, Ss	1
	26	71579	(0000–)	Strap, Static, W/Grommet, .19 1.1w 25.0l	1
	27	763045	(0000–)	Screw, Hex, M8 X 1.25 X 20, Fmg	1
	28	41141	(0000–)	Washer, Lock, Int–Ext, 0.31	1
	29	1205048	(0000–0399)	Panel Wldt, Cover, Brush	1
	29	1225506	(0400–)	Panel Wldt, Cover, Brush	1
	30	1020341	(0000–)	Screw, Hex, M8 X 1.25 X 20, Ss, Sems	5
	31	1212248	(0000–)	Tread, Non–Skid–Step, 3.75W 8.5L, Sba	1
	32	09023	(0000–)	Screw, Hex, M8 X 1.25 X 35, Fl, Ss	4
	33	222516	(0000–)	Sleeve, P/m 0.32B 0.50D 0.3L [430Ss]	4
	34	08713	(0000–)	Nut, Hex, Lock, M8 X 1.25, Nl, Ss	2
	35	09010	(0000–)	Screw, Hex, M8 X 1.25 X 25, Ss	4
	36	1017218	(0000–)	Washer, flat, 0.32B 1.00D .12, Ss	4

Fig. 4 – Front Covers and Directional Pedal Group

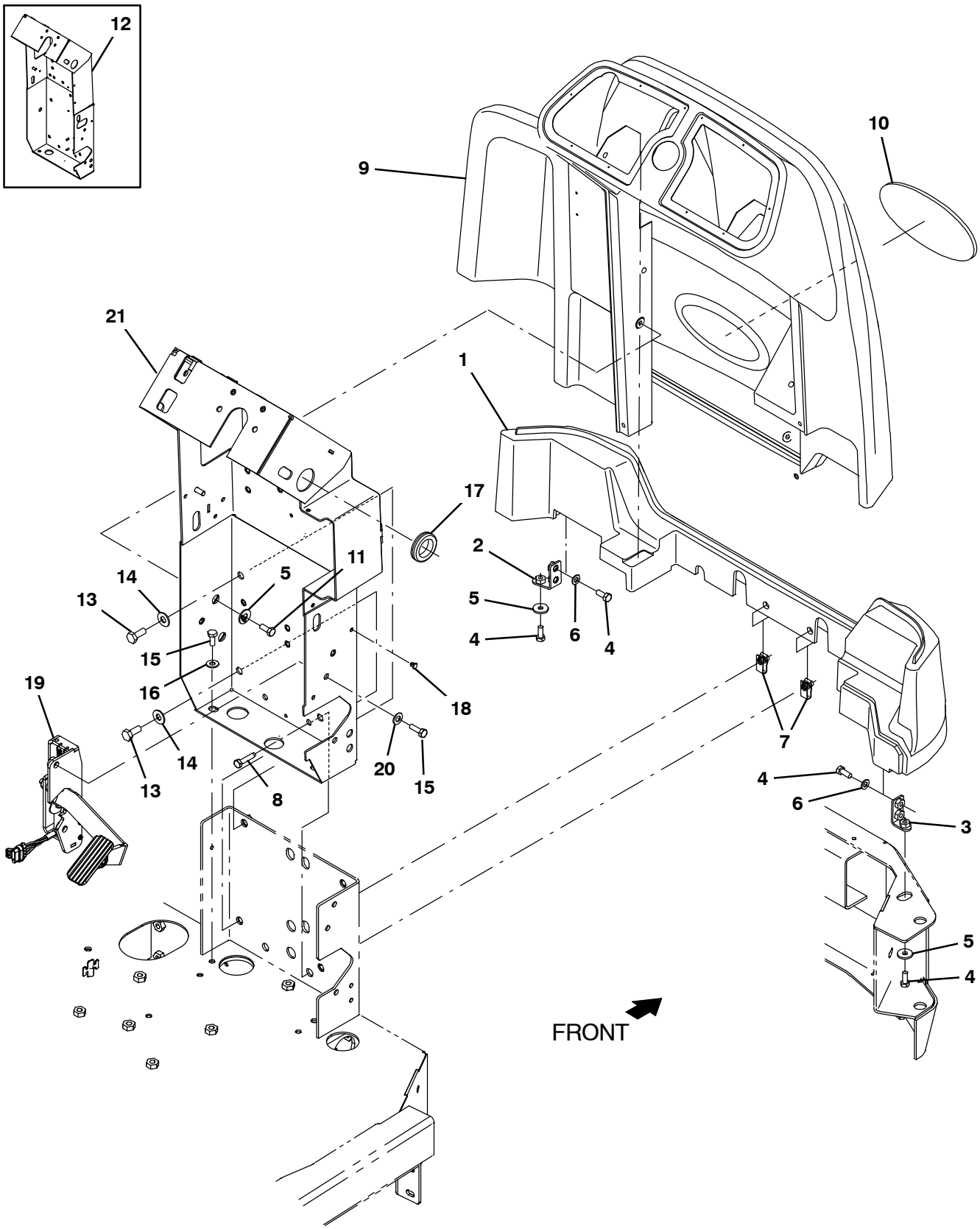

356416

Fig. 4 – Front Covers and Directional Pedal Group

	Ref.	Part No.	Serial Number	Description	Qty.
	1	1204732	(0000–)	Platform, Oprtr, Front	1
	2	1208188	(0000–)	Bracket Wldt, Mtg, Platform, Front	1
	3	1209246	(0000–)	Bracket Wldt, Mtg, Platform, Front, Rh	1
	4	16931	(0000–)	Screw, Hex, M8 X 1.25 X 20, 8.8	6
	5	1017218	(0000–)	Washer, Flat, 0.32b 1.00d .12, Ss	6
	6	39349	(0000–)	Washer, Flat, 0.31, Sae	4
	7	1208045	(0000–)	Nut, U, M8 X 1.25 4–7 Thk	2
	8	1037355	(0000–)	Screw, Hex, M8 X 1.25 X 35, 9.8, Sems	2
▽	9	9020216	(0000–)	Shroud, Front, Afmkt [T17]	1
▲	10	1204077	(0000–)	Nameplate, Tennant, Domed	1
	11	09740	(0000–)	Screw, Hex, M8 X 1.25 X 20, Ss	4
	12	1205397	(0000–0399)	Channel Wldt, Steering	1
	13	39283	(0000–)	Screw, Hex, M10 X 1.50 X 25, 8.8	5
	14	32492	(0000–)	Washer, Flat, 0.38, Std	5
	15	09010	(0000–)	Screw, Hex, M8 X 1.25 X 25, Ss	2
	16	32485	(0000–)	Washer, Flat, 0.38, Sae	2
	17	04051	(0000–)	Grommet, Rbr, 1.31id, F/1.6h, .12 Matl	1
	18	1202868	(0000–)	Clip, Tie, 0.25d, Plstc	6
	19	1209411	(0000–)	Pedal Assy, Accelerator, W/O Brake (See Breakdowns)	1
	20	32491	(0000–)	Washer, Flat, 0.31, Std	1
	21	1218213	(0400–)	Channel Wldt, Sppt, Steering	1

Fig. 5 – Steering Group

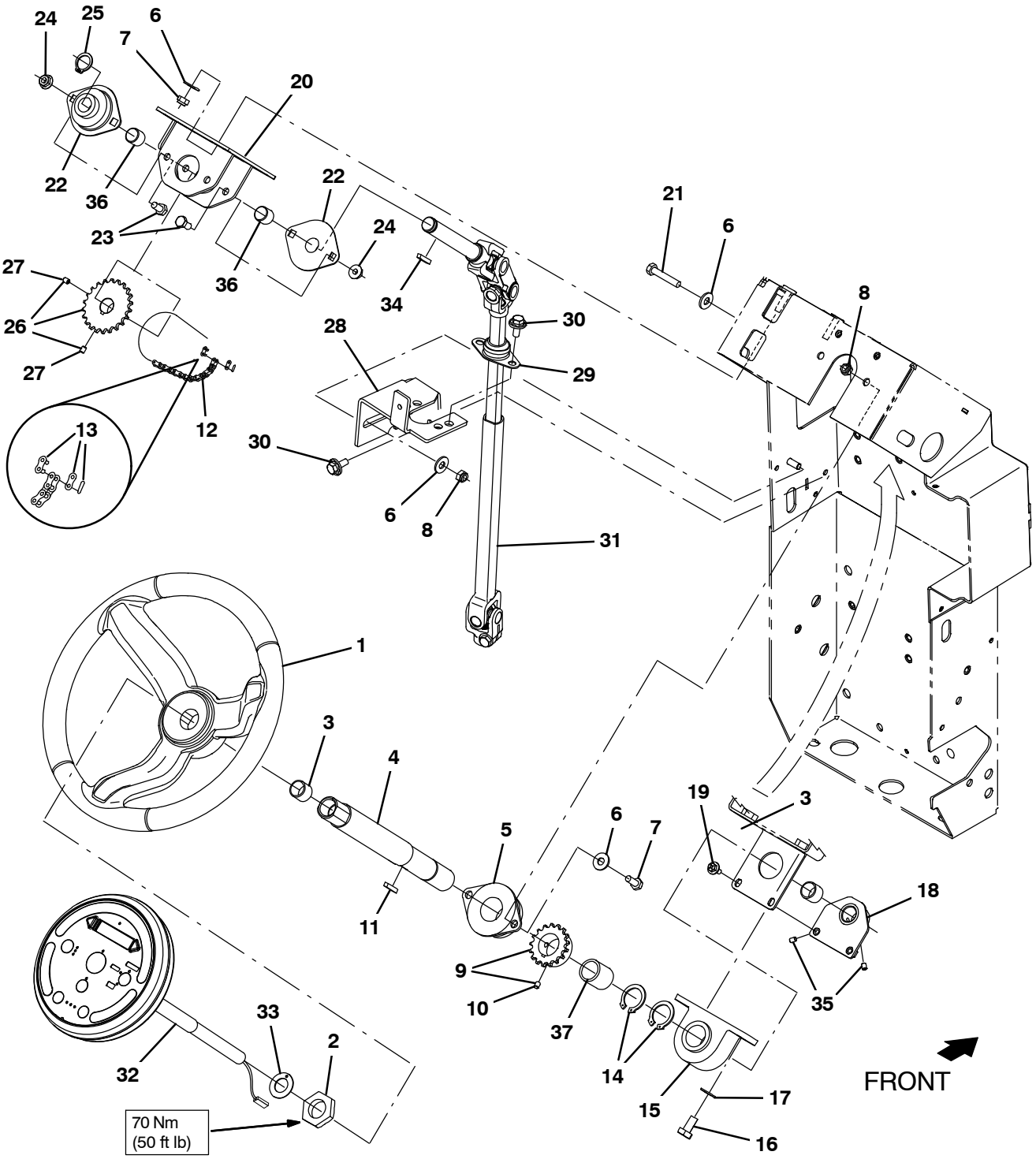

356417

Fig. 5 – Steering Group

	Ref.	Part No.	Serial Number	Description	Qty.
	1	1056412	(0000–)	Wheel, Steering, 14.4d	1
	2	1059073	(0000–)	Nut, Hex, Jam, 1.12–12	1
	3	1057785	(0000–)	Bearing, Journal, 0.75b 0.88d 0.75l	2
	4	1208612	(0000–0399)	Tube, Column, Steering	1
	4	1224341	(0400–)	Tube, Column, Steering	1
	5	1057043	(0000–)	Bearing, Flng, 2hole, 1.25b	1
	6	32491	(0000–)	Washer, Flat, 0.31, Std	8
	7	16931	(0000–)	Screw, Hex, M8 X 1.25 X 20, 8.8	8
	8	08709	(0000–)	Nut, Hex, Lock, M8 X 1.25, Nl	5
▽		9010942	(0000–0399)	Sprocket Kit, 1.12B, Afmkt [T12]	1
▲	9	1053825	(0000–0399)	Sprocket, Steering, 1.12B	1
▲	10	09162	(0000–0399)	Screw, Set, M6 X 1.00 X 8, Nl	2
▽		9014999	(0400–)	Sprocket Kit, 1.12B, Afmkt [T17/M17]	1
▲	9	1224700	(0400–)	Sprocket, Steering, 1.12B	1
▲	10	1224893	(0400–)	Screw, Set, M8 X 1.25 X 8, Lock	1
	11	00912	(0000–)	Key, Sq, 0.19 X 0.19, 1.00l	1
	12	1073181	(0000–)	Chain, Rlr, 35 X 41 Pitches	1
	13	14799	(0000–)	Link, Chain, Rlr, 35	1
	14	70651	(0000–0399)	Ring, Retaining, Ext, 1.12d	1
	14	70651	(0400–)	Ring, Retaining, Ext, 1.12d	2
	15	1054654	(0000–)	Bearing, Pillowblock, 1.12b	1
	16	06961	(0000–)	Screw, Hex, M10 X 1.5	2
	17	32485	(0000–)	Washer, Flat, 0.38, Sae	2
	18	1208625	(0000–)	Plate Wldt, Brg	1
	19	1034731	(0000–)	Screw, Hex, M6 X 1.00 X 16, Ss, Sems	2
	20	1057572	(0000–)	Plate Wldt, Sppt, Brg	1
	21	222505	(0000–)	Screw, Hex, M8 X 1.25 X 45, Ss	1
	22	1057554	(0000–)	Bearing, Flng, 2hole, 0.75b	2
	23	16735	(0000–)	Screw, Hex, M8 X 1.25 X 16, 8.8	4
	24	07791	(0000–)	Nut, Hex, Flng, M8 X 1.25	4
	25	26428	(0000–)	Ring, Retaining, Ext, 0.75d, Hd	1
▽		9010943	(0000–0399)	Sprocket Kit, 0.75B, Afmkt [T12]	1
▲	26	1057171	(0000–0399)	Sprocket, Steering, 0.75B	2
▲	27	09162	(0000–0399)	Screw, Set, M6 X 1.00 X 8, Nl	2
▽		9014998	(0400–)	Sprocket Kit, 0.75B, Afmkt [T17/M17]	1
▲	26	1224699	(0400–)	Sprocket, Steering, 0.75B	2
▲	27	1224893	(0400–)	Screw, Set, M6 X 1.00 X 8, Nl	2
	28	1205296	(0000–0399)	Bracket, Brg	1
	28	1225503	(0400–)	Bracket, Brg	1
	29	223065	(0000–)	Bearing, Flng, 2hole, 0.75b [Nyl]	1
	30	1020341	(0000–)	Screw, Hex, M8 X 1.25 X 20, Ss, Sems	4
	31	1208113	(0000–)	Shaft, Steering, Mnl	1
	32	9020223	(0000–)	Panel Kit, Pod, Afmkt [T17]	1
	33	04846	(0000–)	Washer, Thrust, 0.79b 1.42d 0.06[Garlok]	1
	34	00912	(0000–0399)	Key, Sq, 0.19 X 0.19, 1.00l	1
	34	00911	(0400–)	Key, Sq, 0.19 X 0.19, 1.00l	1
	35	09162	(0000–)	Screw, Set, M6 X 1.00 X 8, Nl	2
	36	1226141	(0400–)	Sleeve, P/M, 0.75B 0.88D 0.6L [841Brz]	2
	37	1224454	(0400–)	Sleeve, P/M, 1.13B 1.38D 1.0L	1

Fig. 6 – Brake Pedal Group

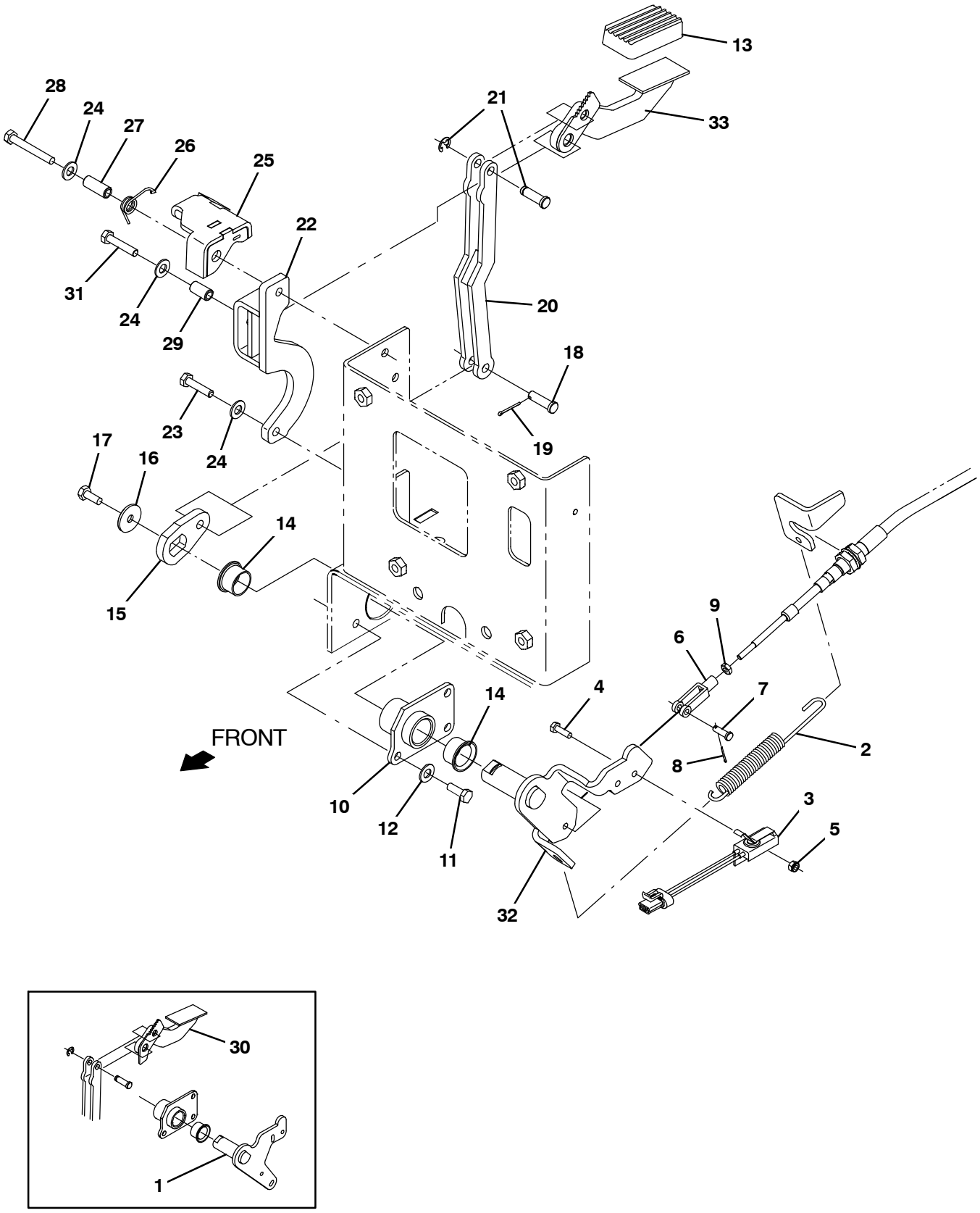

356418

Fig. 6 – Brake Pedal Group

Ref.	Part No.	Serial Number	Description	Qty.
1	1207177	(0000–0399)	Shaft Wldt, Pivot, Front	1
2	1213461	(0000–)	Spring, Tens, .75Od X .08S 7.0L	1
3	1212400	(0000–)	Switch, Snap, 15a Nc	1
4	15678	(0000–)	Screw, Hex, M6 X 1.00 X 16, Ss	2
5	08712	(0000–)	Nut, Hex, Lock, M6 X 1.00, Nl, Ss	2
6	14595–1	(0000–)	Clevis, Adj, 0.25pin, 0.25–28 Rh, Pl	1
7	605070	(0000–)	Pin, Clevis, 0.25d X 0.79l	1
8	08178	(0000–)	Pin, Cotter, .062 X 0.75	1
9	32899	(0000–)	Nut, Hex, Jam, .25–28	1
10	1209015	(0000–0399)	Bracket Wldt, Support, Brake	1
10	1218580	(0400–)	Bracket Wldt, Support, Brake	1
11	09010	(0000–0399)	Screw, Hex, M8 X 1.25 X 25, Ss	3
11	09011	(0400–)	Screw, Hex, M8 X 1.25 X 30, Ss	3
12	01685	(0000–)	Washer, Flat, 0.38b 0.88d .08, Ss	3
13	1207654	(0000–)	Pad, Pedal, Brake, 2.79l 1.84w .75t	1
14	56166	(0000–)	Bushing, Flng, 1.00b 1.13d 0.75l	2
15	1207174	(0000–0399)	Bracket, Brake, Front	1
15	1218579	(0400–)	Bracket, Brake, Front	1
16	1016331	(0000–)	Washer, Flat, 0.34b 1.25d .11, Ss	1
17	09740	(0000–)	Screw, Hex, M8 X 1.25 X 20, Ss	1
18	46657	(0000–)	Pin, Clevis, 0.37d X 1.25l	1
19	08179	(0000–)	Pin, Cotter, .094 X 1.00	1
20	1207566	(0000–)	Link Wldt, Brake	1
21	1207981	(0000–)	Pin, Clevis, Grvd, 0.38d X 1.25l	1
22	1207571	(0000–)	Bracket Wldt, Pedal Mount	1
23	59658	(0000–)	Screw, Hex, M8 X 1.25 X 35, Nl, Ss	1
24	32485	(0000–)	Washer, Flat, 0.38, Sae	3
25	1208512	(0000–)	Pedal Wldt, Brake, Parking	1
26	1208162	(0000–)	Spring, Tors, .54d .09wir	1
27	222497	(0000–)	Sleeve, P/M, 0.32b 0.50d 1.3l [430ss]	1
28	77270	(0000–)	Screw, Hex, M8 X 1.25 X 60, Ss	1
29	222496	(0000–)	Sleeve, P/M, 0.32b 0.50d 0.9l [430ss]	1
30	1207567	(0000–0399)	Plate Wldt, Shaft Pedal	1
31	74440	(0000–)	Screw, Hex, M8 X 1.25 X 40, Nl, Ss	1
32	1217475	(0400–)	Shaft Wldt, Pivot, Front	1
33	1216507	(0400–)	Plate Wldt, Shaft, Pedal	1

Fig. 7 – Instrument Panel and Front Electrical Group

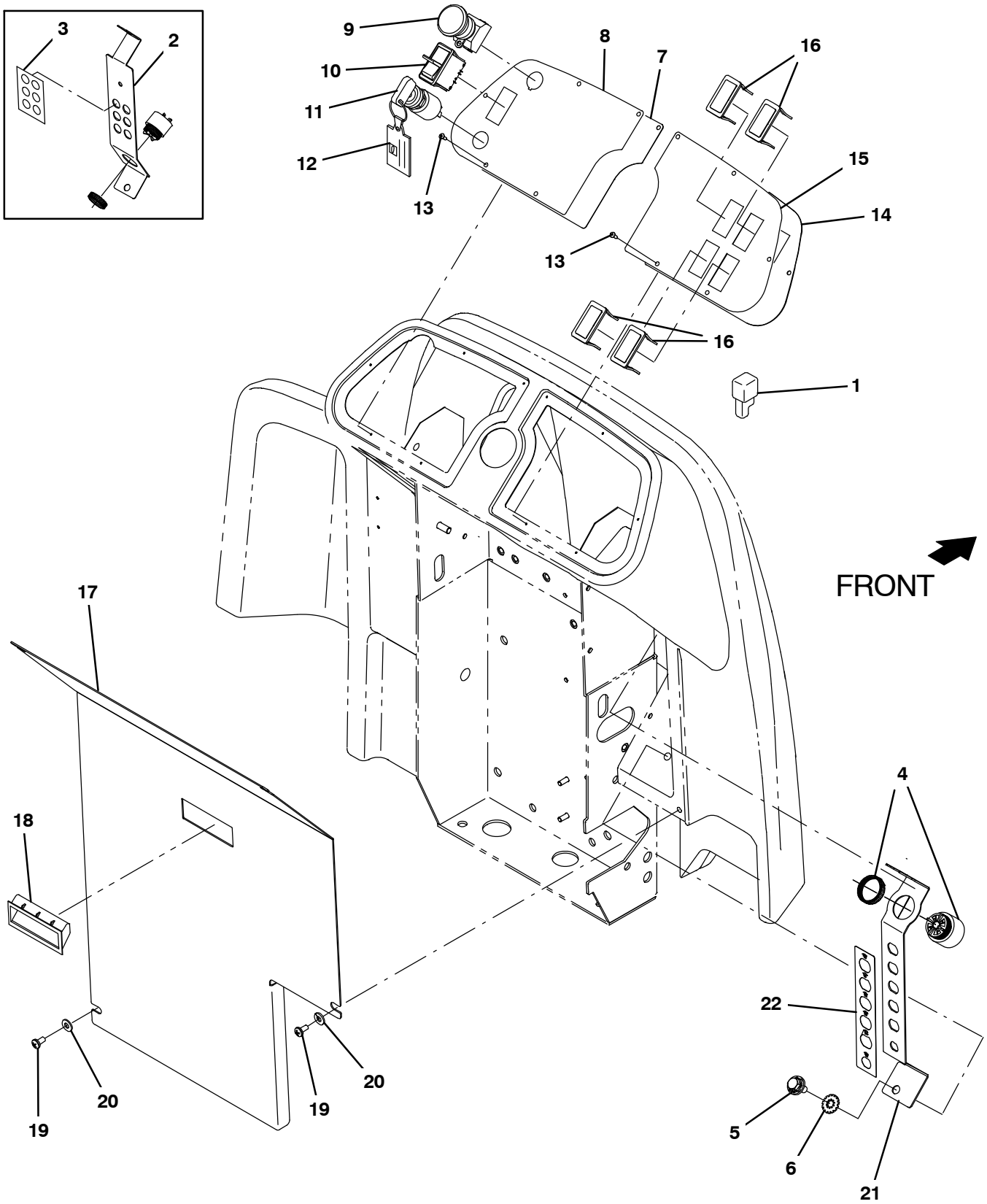

356419 – CE

Fig. 7 – Instrument Panel and Front Electrical Group

	Ref.	Part No.	Serial Number	Description	Qty.
	1	222290	(0000–)	Diode, Ele, Plug	1
	2	1206546	(0000–0399)	Bracket, Ele, Cb	1
	3	1208411	(0000–0399)	Label, Circuit Breaker	1
	4	1052726	(0000–)	Alarm, 9–48vdc, 95 Db(A) [Ec–H20]	1
	5	1020341	(0000–)	Screw, Hex, M8 X 1.25 X 20, Ss, Sems	1
	6	41141	(0000–)	Washer, Lock, Int–Ext, 0.31	1
	7	1201534	(0000–)	Panel, Console, Lh	1
	8	1204170	(0000–)	Label, Opertnl, Console, Lh	1
	9	1011735	(0000–)	Switch, Safety, Shutoff	1
	10	1058679	(0000–)	Switch, Rocker, Dpdt, On / None / On	1
▽	11	361076	(0000–)	Switch, Ignition [Merit Gmbh]	1
▲		361144	(0000–)	Key, Ignition, Sgl	1
	12	1075003	(0000–)	Keychain, Rectangle, Parts & Service	1
	13	140825	(0000–)	Screw, Pan, Phl, 06 X 0.50, Fmg/Ab, Blk	10
	14	1208185	(0000–)	Panel, Console, Rh	1
	15	1208416	(0000–)	Label, Opertnl, Console, Rh	1
	16	398501	(0000–)	Plug, Hole, Rt, Rocker Switch, .87 X 1.7	4
	17	9020226	(0000–)	Panel, Access, Ce, Afmkt [T17]	1
	18	1208187	(0000–)	Handle, Panel	1
	19	1045525	(0400–)	Screw, Pan, Phl, M6 X 1.00 X 12, Blk	4
	20	1069322	(0400–)	Washer, Flat, 0.25, Sae, Blk	4
	21	1217573	(0400–)	Bracket, Ele, Circuitbreaker	1
	22	1218920	(0400–)	Label, Circuitbreaker, Steering	1

Fig. 8 – Seat Group

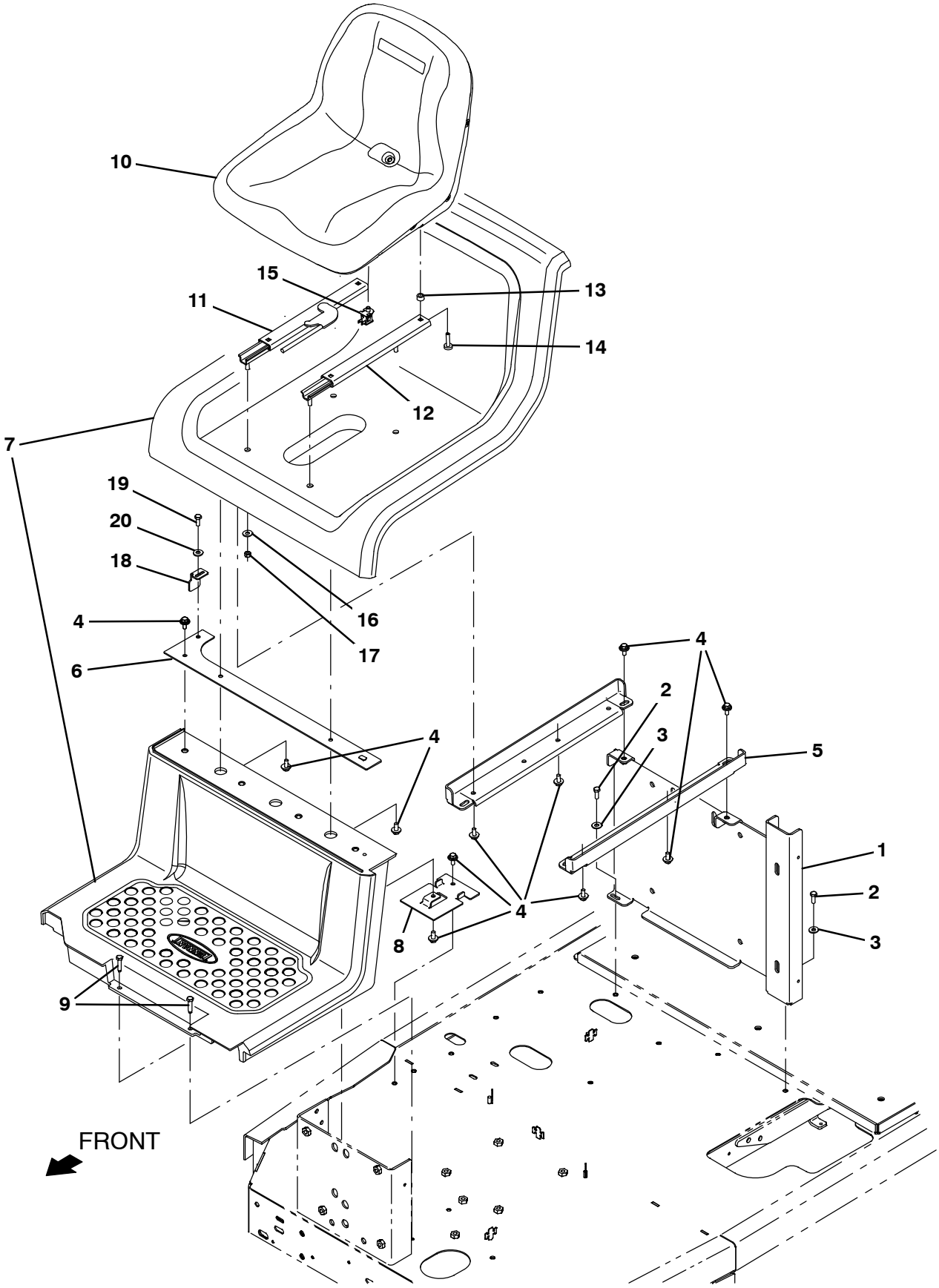

356420

Fig. 8 – Seat Group

Ref.	Part No.	Serial Number	Description	Qty.
1	1207922	(0000–)	Bracket Wldt, Sppt, Tank	1
2	12333	(0000–)	Screw, Hex, M8 X 1.25 X 25, Ss, Nl	2
3	1017218	(0000–)	Washer, Flat, 0.32b 1.00d .12, Ss	2
4	1020341	(0000–)	Screw, Hex, M8 X 1.25 X 20, Ss, Sems	11
5	1206424	(0000–)	Angle, Sppt, Seat	2
6	1206785	(0000–)	Plate Wldt, Mtg, Platform	1
7	1212415	(0000–)	Platform Set, Oprtr [T17]	1
8	1205073	(0000–)	Plate, Mtg	1
9	1037355	(0000–)	Screw, Hex, M8 X 1.25 X 35, 9.8, Sems	2
10	1201894	(0000–)	Seat, Std [Milsco]	1
11	360370	(0000–)	Track, Slide, Seat Adj, 12.5l, W/Latch	1
12	360369	(0000–)	Track, Slide, Seat Adj, 12.5l	1
13	1051052	(0000–)	Spacer, Rnd, .38b .88d .38l	4
14	49177	(0000–)	Screw, Pan, Phl, .31–18 X 1.00, G2	4
15	1048955	(0000–)	Switch, Seat, No [Delta 6440–04]	1
16	01685	(0000–)	Washer, Flat, 0.38b 0.88d .08, Ss	4
17	41437	(0000–)	Nut, Hex, Lock, .31–18, Nl, Ss	4
18	1209194	(0000–)	Angle, Latch	1
19	06942	(0000–)	Screw, Hex, M6 X 1.00 X 16, 8.8	1
20	32483	(0000–)	Washer, Flat, 0.25, Sae	1

Fig. 9 – Deluxe Seat Kit

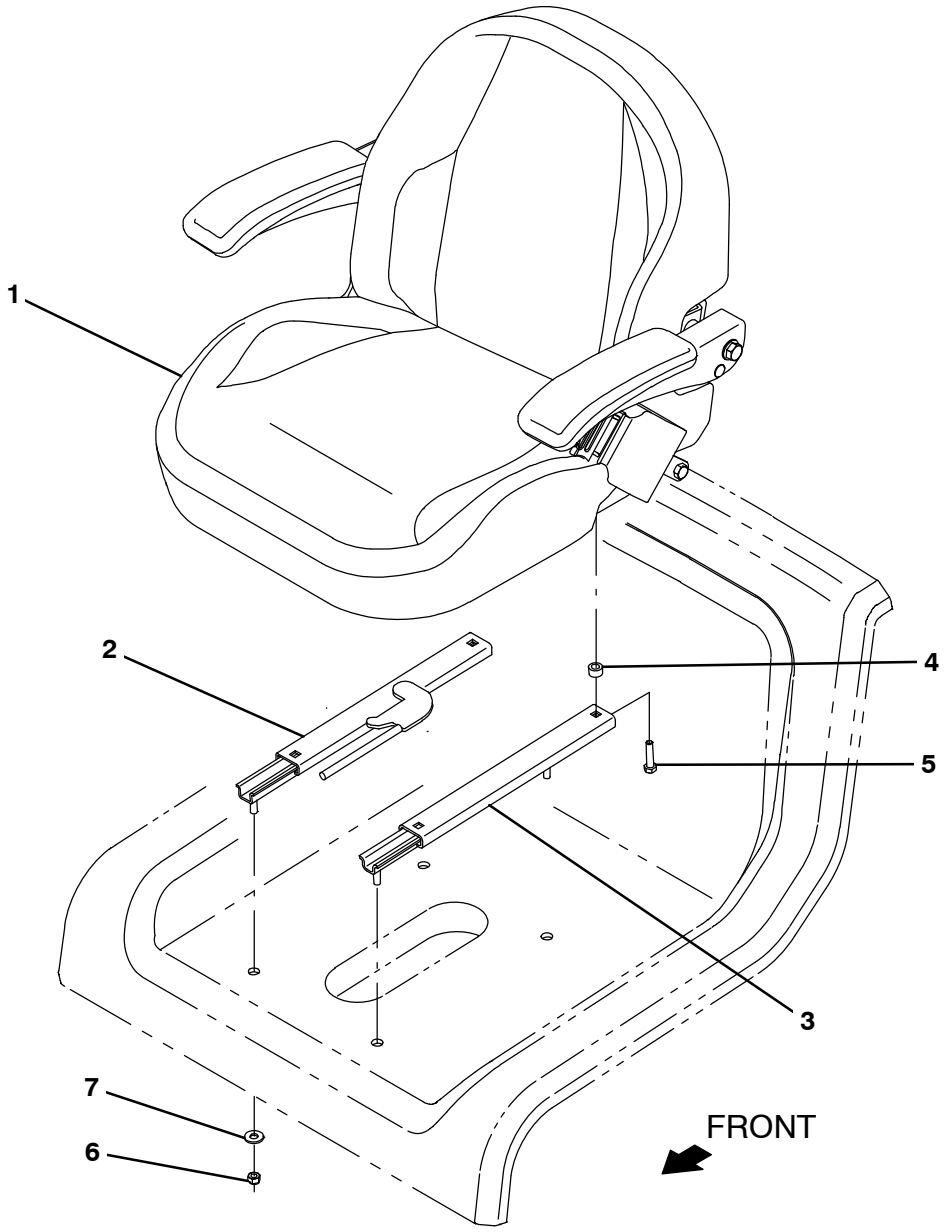

356421

Fig. 9 – Deluxe Seat Kit

	Ref.	Part No.	Serial Number	Description	Qty.
▽	1	9020103	(0000–)	Seat Kit, Deluxe, Ci [T17]	1
▲		1201428	(0000–)	Seat, Dlx, W/ Armrests & Seatbelt	1
▲	2	360370	(0000–)	Track, Slide, Seat Adj, 12.5l, W/Latch	1
▲	3	360369	(0000–)	Track, Slide, Seat Adj, 12.5l	1
▲	4	1051052	(0000–)	Spacer, Rnd, .38b .88d .38l	4
▲	5	49177	(0000–)	Screw, Pan, Phl, .31–18X1.00, G2	4
▲	6	41437	(0000–)	Nut, Hex, Lock, .31–18, Nl, Ss	4
▲	7	01685	(0000–)	Washer, Flat, 0.38b 0.88d .08, Ss	4

Fig. 10 – Drive Wheel Group (0000–0399)

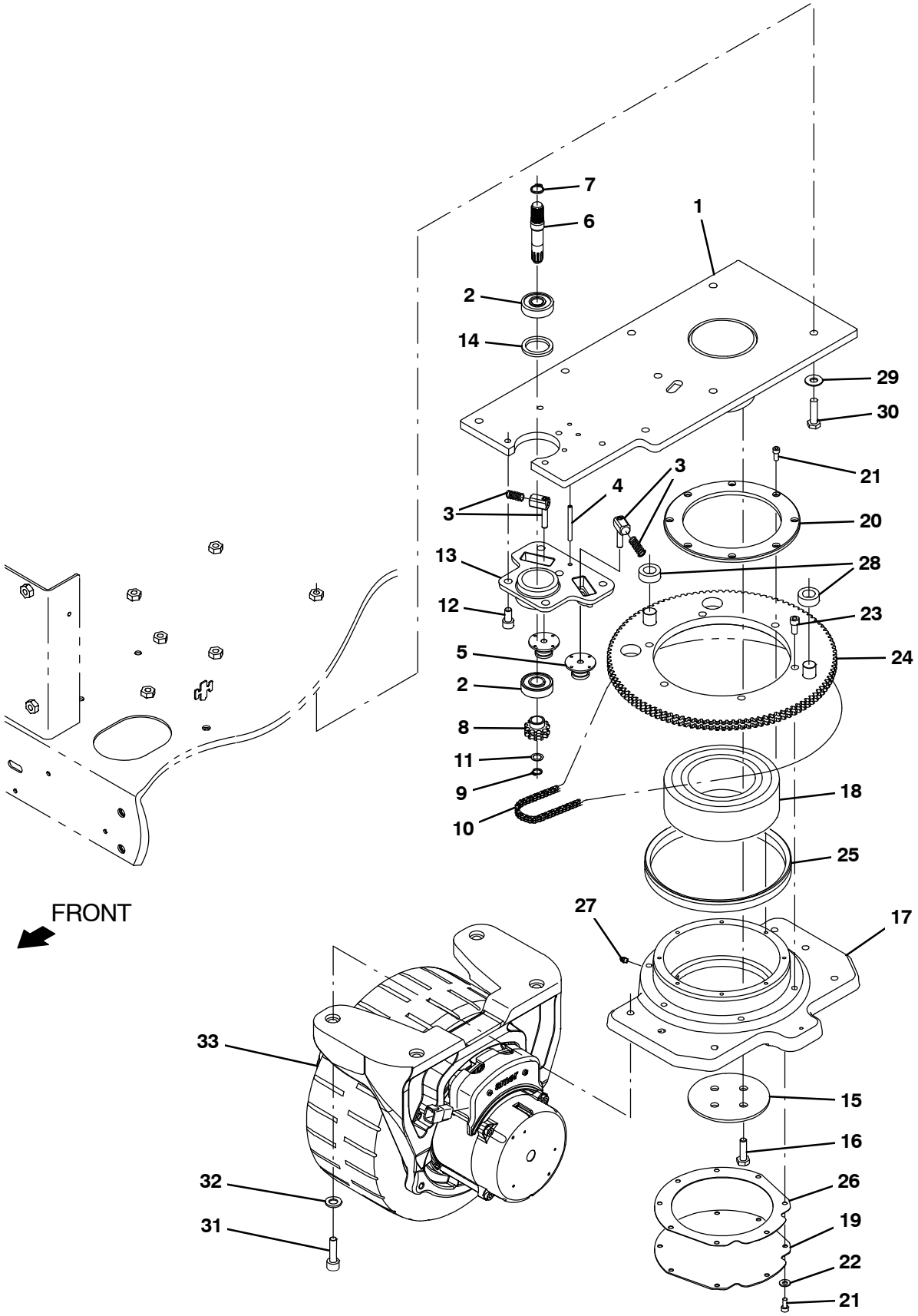

356422

Fig. 10 – Drive Wheel Group (0000–0399)

	Ref.	Part No.	Serial Number	Description	Qty.
▽		9013267	(0000–0399)	Transmission Assy, Str, Afmkt [T17]	1
▲	1	1209073	(0000–0399)	Plate Wldt, Attachment, Frame	1
▲	2	1208971	(0000–0399)	Bearing, Ball, 0.67b, 1.85d, 0.55w	2
▲	3	9015632	(0000–0399)	Tensioner Kit, Str Trans, Afmkt [T17/M17]	2
▲	4	26315	(0000–0399)	Pin, Roll, .250X 1.5L, .250/.256	4
▲	5	1208974	(0000–0399)	Tensioner, Chain, Dbl	2
▲	6	1208986	(0000–0399)	Shaft, Input, Transmission	1
▲	7	1208985	(0000–0399)	Ring, Retaining, Ext, 16.2mm Id, Hd	1
▲	8	1208989	(0000–0399)	Sprocket, Dbl	1
▲	9	1208983	(0000–0399)	Ring, Retaining, Ext, 11.5mm Id	1
▲	10	1208987	(0000–0399)	Chain, Double, 3/8 Pitch, Transmission	1
▲	11	1208999	(0000–0399)	Washer, Large, Transmission	1
▲	12	1208977	(0000–0399)	Screw, Soc, M10 X 1.5 X 20, 12.9	5
▲	13	1209052	(0000–0399)	Housing, Input [As Machined]	1
▲	14	1209168	(0000–0399)	Spacer, Brg, Transmission	1
▲	15	1209966	(0000–0399)	Retainer, Shaft, Transmission	1
▲	16	368176	(0000–0399)	Screw, Hex, M10 X 1.50 X 35, 10.9	4
▲	17	1210286	(0000–0399)	Housing, Output, Machined	1
▲	18	1209969	(0000–0399)	Bearing, Ball, 3.74b, 6.69d, 2.19w	1
▲	19	1209968	(0000–0399)	Cover, Transmission	1
▲	20	1209965	(0000–0399)	Retainer, Housing, Transmission	1
▲	21	1062386	(0000–0399)	Screw, Soc, M6 X 1.00 X 14, Nl	16
▲	22	32483	(0000–0399)	Washer, Flat, 0.25, Sae	8
▲	23	41358	(0000–0399)	Screw, Soc, M10 X 1.50 X 35, 12.9	6
▲	24	1209964	(0000–0399)	Sprocket Wldt, Output, Transmission	1
▲	25	1209995	(0000–0399)	Seal, Axial, Transmission [199 Vs R]	1
▲	26	1209960	(0000–0399)	Gasket, Steering, Transmission	1
▲	27	07259	(0000–0399)	Fitting, Grease, Str Pm04 .47l	1
▲	28	1211952	(0000–0399)	Tube, 0.74id 1.24od 0.47l, Pyu	2
▲	29	32492	(0000–0399)	Washer, Flat, 0.38, Std	7
▲	30	39285	(0000–0399)	Screw, Hex, M10 X 1.50 X 40, 8.8	7
▲	31	16960	(0000–0399)	Screw, Soc, M12 X 1.75 X 40, 12.9	4
▲	32	33925	(0000–0399)	Washer, Flat, M12	4
▽	33	1206485	(0000–0399)	Wheel Assy, Drive, Ac, W/O Brake	1
▲		9020266	(0000–0399)	Tire, Assy, Front, Std, Red [T17]	1
▲		9020269	(0000–0399)	Motor Replmt kit, Drive [T17]	1
▽	33	1208899	(0000–0399)	Wheel Assy, Drive, Ac, W/O Brake, White (Optional)	1
▲		9020267	(0000–0399)	Tire Assy, Front, Opt, White [T17] (Optional)	1
▲		9020269	(0000–0399)	Motor Replmt kit, Drive [T17]	1

Fig. 11 – Drive Wheel Group (0400–)

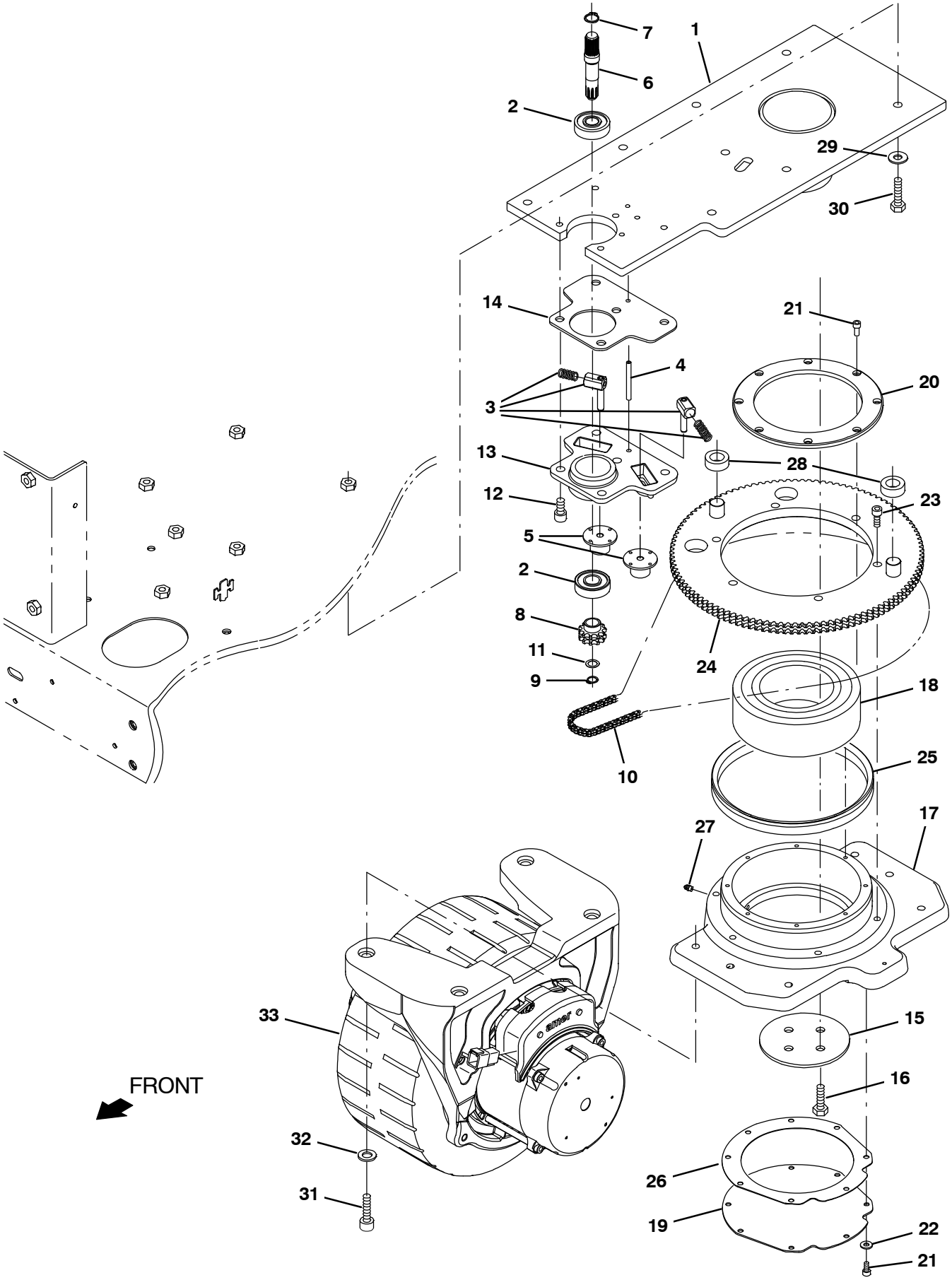

356615

Fig. 11 – Drive Wheel Group (0400–)

	Ref.	Part No.	Serial Number	Description	Qty.
▽		9014997	(0400–)	Transmission Assy, Str, Afmkt [T17/M17]	1
▲	1	1217322	(0400–)	Plate Wldt, Attachment, Frame	1
▲	2	1208971	(0400–)	Bearing, Ball, 0.67b, 1.85d, 0.55w	2
▲	3	9015632	(0400–)	Tensioner Kit, Str Trans, Afmkt [T17/M17]	1
▲	4	26315	(0400–)	Pin, Roll, .250d X 1.50l, .250/.256	
▲	5	1208974	(0400–)	Tensioner, Chain, Dbl	2
▲	6	1208986	(0400–)	Shaft, Input, Transmission	1
▲	7	1208985	(0400–)	Ring, Retaining, Ext, 16.2mm Id, Hd	1
▲	8	1208989	(0400–)	Sprocket, Dbl	1
▲	9	1208983	(0400–)	Ring, Retaining, Ext, 11.5mm Id	1
▲	10	1208987	(0400–)	Chain, Double, 3/8 Pitch, Transmission	1
▲	11	1208999	(0400–)	Washer, Flat, 0.50b 0.75d .02, Stl	1
▲	12	1208977	(0400–)	Screw, Soc, M10 X 1.5 X 20, 12.9	5
▲	13	1209052	(0400–)	Housing, Input [As Machined]	1
▲	14	1225563	(0400–)	Shim, Transmission	1
▲	15	1209966	(0400–)	Retainer, Shaft, Transmission	1
▲	16	368176	(0400–)	Screw, Hex, M10 X 1.50 X 35, 10.9	4
▲	17	1210286	(0400–)	Housing, Output, Machined	1
▲	18	1209969	(0400–)	Bearing, Ball, 3.74b, 6.69d, 2.19w	1
▲	19	1209968	(0400–)	Cover, Transmission	1
▲	20	1209965	(0400–)	Retainer, Housing, Transmission	1
▲	21	1062386	(0400–)	Screw, Soc, M6 X 1.00 X 14, Nl	16
▲	22	32483	(0400–)	Washer, Flat, 0.25, Sae	8
▲	23	41358	(0400–)	Screw, Soc, M10 X 1.50 X 35, 12.9	6
▲	24	1209964	(0400–)	Sprocket Wldt, Output, Transmission	1
▲	25	1209995	(0400–)	Seal, Axial, Transmission [199 Vs R]	1
▲	26	1209960	(0400–)	Gasket, Steering, Transmission	1
▲	27	07259	(0400–)	Fitting, Grease, Str Pm04 .47l	1
▲	28	1211952	(0400–)	Tube, 0.74id 1.24od 0.47l, Pyu	2
▲	29	32492	(0400–)	Washer, Flat, 0.38, Std	7
▲	30	39285	(0400–)	Screw, Hex, M10 X 1.50 X 40, 8.8	7
▲	31	16960	(0400–)	Screw, Soc, M12 X 1.75 X 40, 12.9	4
▲	32	33925	(0400–)	Washer, Flat, M12, Ss	4
▽	33	1228053	(0400–)	Wheel, Drive, Ac, W/O Brake, Gray [Hd]	1
▲		9015044	(0400–)	Tire Assy, Front, Std, Gray [M17]	1
▲		9015045	(0400–)	Motor Rplmt Kit, Drive [M17]	1

Fig. 12 – Drive Wheel Electrical Group (0000–0399)

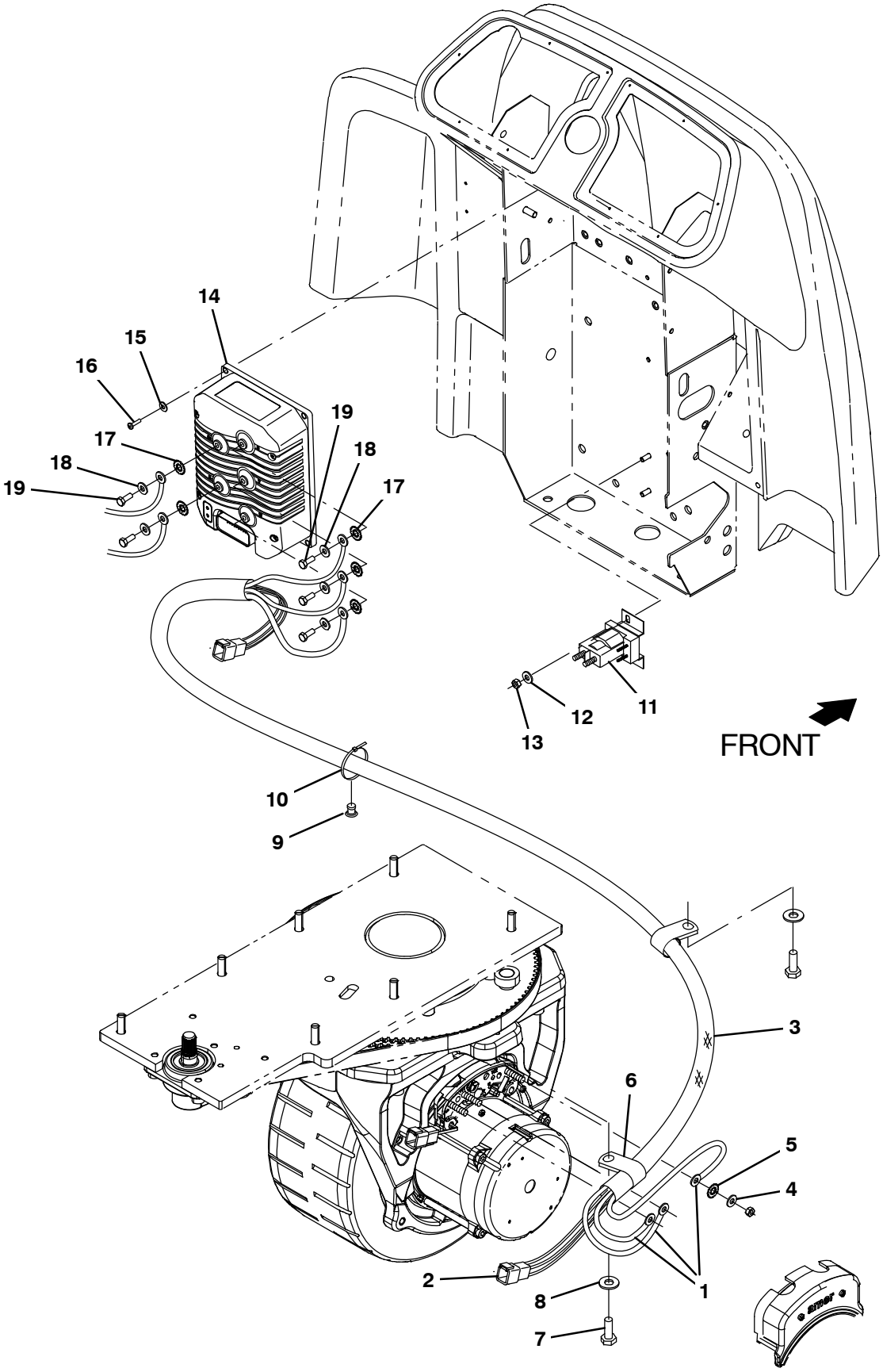

356662

Fig. 12 – Drive Wheel Electrical Group (0000–0399)

Ref.	Part No.	Serial Number	Description	Qty.
1	1072951	(0000–0399)	Harness, Cable, Propel Motor [T17] (Replaced by 9015274)	1
2	1072952	(0000–0399)	Harness, Ele, Propel Motor [T17] (Replaced by 9015274)	1
3	82831	(0000–0399)	Sleeve, Nyl, 1.63id 35.0l	1
4	39349	(0000–0399)	Washer, Flat, 0.31, Sae	3
5	32984	(0000–0399)	Washer, Lock, Int, 0.31	3
6	69234	(0000–0399)	Clamp, Cable, Stl, 1.00d X 0.75w, 1hole	1
7	15678	(0000–0399)	Screw, Hex, M6 X 1.00 X 16, Ss	1
8	01684	(0000–0399)	Washer, Flat, 0.27b 0.69d .05, Ss	1
9	1071085	(0000–0399)	Clip, Tie, 0.25d, Plstc	1
10	763114	(0000–0399)	Tie, Cable, 11.3l, 2.75d Max	1
11	386810	(0000–0399)	Contactor, 36vdc, 100a, Sp, No	2
12	32483	(0000–0399)	Washer, Flat, 0.25, Sae	2
13	41359	(0000–0399)	Nut, Hex, Std, M6 X 1.00, 8	2
14	1207297	(0000–0399)	Controller, Propel [Ac, 36v, 275a]	1
15	01683	(0000–0399)	Washer, Flat, 10, Ss	4
16	24265	(0000–0399)	Screw, Pan, Phl, M4 X 0.70 X 16, Ss	4
17	07515	(0000–0399)	Washer, Lock, Int, 0.25, Ss	5
18	32483	(0000–0399)	Washer, Flat, 0.25, Sae	5
19	06942	(0000–0399)	Screw, Hex, M6 X 1.00 X 16, 8.8	5

Fig. 13 – Drive Wheel Electrical Group (0400–)

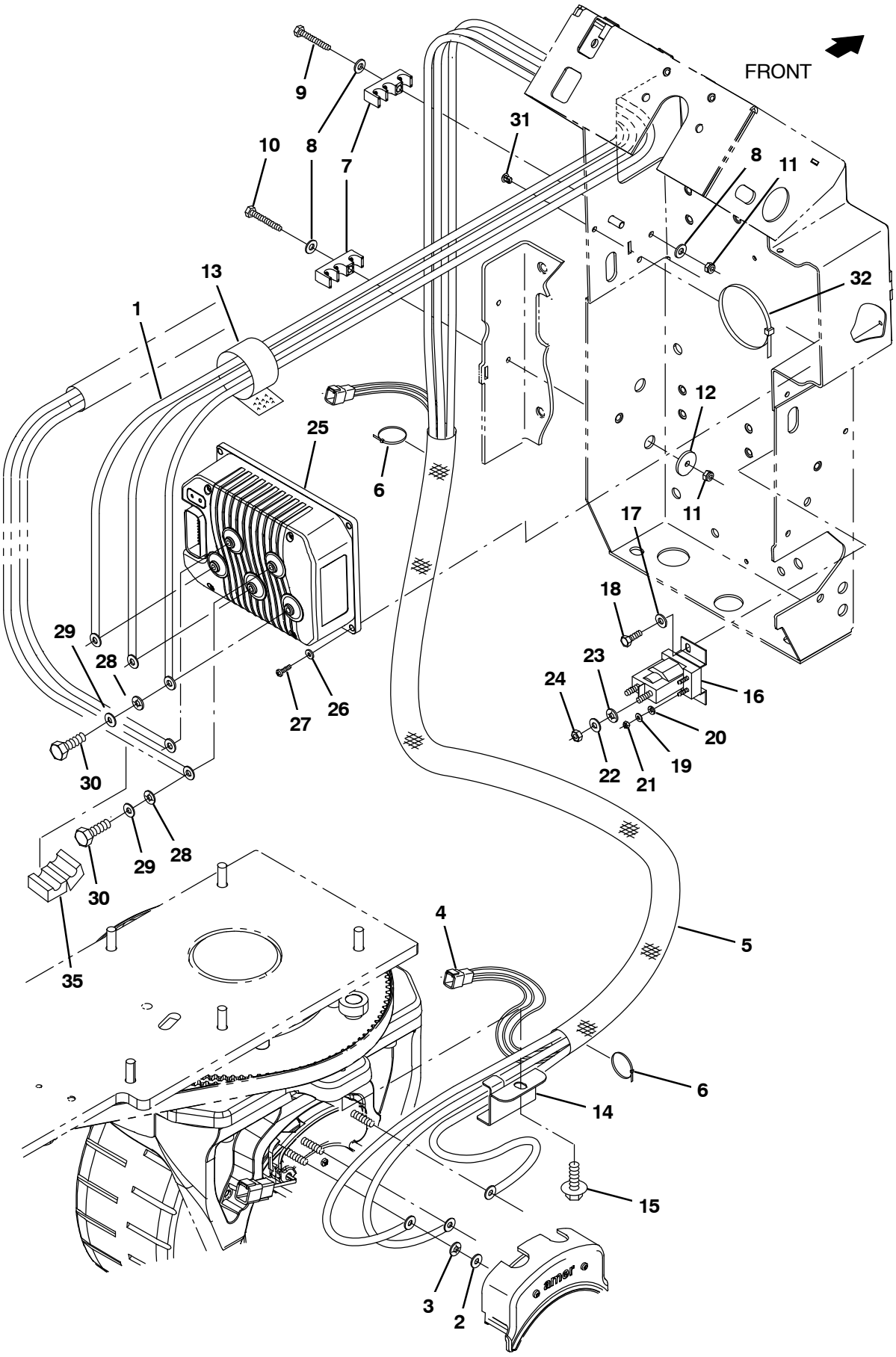

356420

Fig. 13 – Drive Wheel Electrical Group (0400–)

Ref.	Part No.	Serial Number	Description	Qty.
1	1074570	(0400–)	Cable Assy, 02ga [T18/T17, Propel]	1
2	39349	(0400–)	Washer, Flat, 0.31, Sae	3
3	32984	(0400–)	Washer, Lock, Int, 0.31	3
4	1075150	(0400–)	Harness, Ele, Propel Motor [M17, T17]	1
5	13773	(0400–)	Sleeve, Nyl, 1.63id 20.0l	1
6	763114	(0400–)	Tie, Cable, 11.3l, 2.75d Max	2
7	1221794	(0400–)	Clamp, Sppt, Wire	4
8	32483	(0400–)	Washer, Flat, 0.25, Sae	5
9	06946	(0400–)	Screw, Hex, M6 X 1.00 X 35, 8.8	1
10	06948	(0400–)	Screw, Hex, M6 X 1.00 X 45, 8.8	1
11	08708	(0400–)	Nut, Hex, Lock, M6 X 1.00, Nl	4
12	386063	(0400–)	Washer, Flat, 0.25b 1.12d .12, Ss	1
13	1209444	(0400–)	Fastener, 11.00l [Hook & Loop]	1
14	1217751	(0400–)	Clamp, Cable	1
15	1040467	(0400–)	Screw, Hex, M6 X 1.00 X 20, 9.8, Sems	1
16	386810	(0400–)	Contactor, 36vdc, 100a, Sp, No	1
17	32483	(0400–)	Washer, Flat, 0.25, Sae	2
18	06942	(0400–)	Screw, Hex, M6 X 1.00 X 16, 8.8	2
19	19324	(0400–)	Washer, Flat, 10, Sae	2
20	32980	(0400–)	Washer, Lock, Int, 10	2
21	01713	(0400–)	Nut, Hex, Std, 10–32,	2
22	39349	(0400–)	Washer, Flat, 0.31, Sae	2
23	32984	(0400–)	Washer, Lock, Int, 0.31	2
24	20170	(0400–)	Nut, Hex, Jam, .31–24	2
25	1225442	(0400–)	Controller, Propel [Ac, 36v, 275a]	1
26	19065	(0400–)	Washer, Flat, 0.19b 0.44d .05, Pl, 08	4
27	06927	(0400–)	Screw, Pan, Phl, M4 X 0.70 X 16, 4.8	4
28	07515	(0400–)	Washer, Lock, Int, 0.25, Ss	5
29	32483	(0400–)	Washer, Flat, 0.25, Sae	5
30	06942	(0400–)	Screw, Hex, M6 X 1.00 X 16, 8.8	5
31	1202868	(0400–)	Clip, Tie, 0.25d, Plstc	1
32	130773	(0400–)	Tie, Cable, Nyl, 11.0l, .14w, 3.0 Max. D	1
33	1039998	(0400–)	Inductor, 32.5mml [Ferrite 25–300mhz]	

Fig. 14 – Rear Wheels and Brake Group

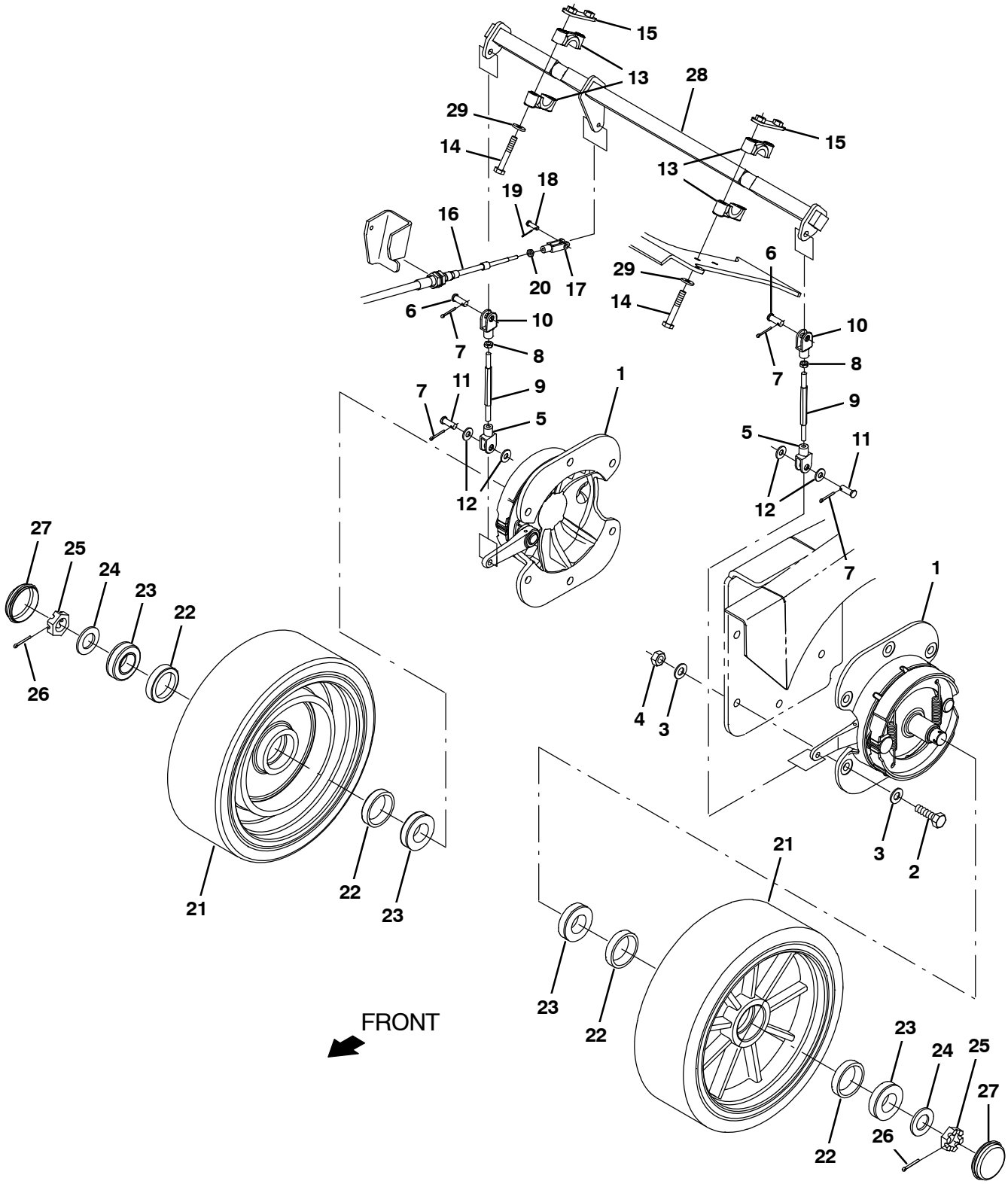

356423

Fig. 14 – Rear Wheels and Brake Group

	Ref.	Part No.	Serial Number	Description	Qty.
▽	1	54577	(0000–)	Brake Assy, Drum, Mech, 07.9d [6600]	2
▲		66211	(0000–)	Shoe Set, Brake [1pick=1pkg]	1
▲▽		66213	(0000–)	Brake Kit, Repair	1
▲▲		70161	(0000–)	Shaft	1
▲		70158	(0000–)	Spring	2
	2	06969	(0000–)	Screw, Hex, M12 X 1.75 X 40, 8.8	12
	3	32486	(0000–)	Washer Flat,0.50,Sae	24
	4	08711	(0000–)	Nut, Hex, Lock, M12 X 1.75, Nl	12
▽		9020231	(0000–)	Brake Rod Kit, Afmkt [T17]	2
▲	5	1023676	(0000–)	Clevis, Adj, 0.38pin, 0.31–24, Pl	2
▲	6	76653	(0000–)	Pin, Clevis, 0.37d X 1.00l	2
▲	7	08182	(0000–)	Pin, Cotter, .125 X 1.00	4
▲	8	20170	(0000–)	Nut, Hex, Jam, .31–24	2
▲	9	1207984	(0000–)	Rod, Hex, Thd .31–24, 2–Ended	2
▲	10	1023677	(0000–)	Clevis, Adj, 0.38pin, 0.31–24, Lh, Pl	2
▲	11	630258	(0000–)	Pin, Clevis, 0.38D X 1.00L	2
▲	12	32491	(0000–)	Washer, flat, 0.31, Std	4
	13	381502	(0000–)	Bearing, Split, 1.00b	4
	14	39281	(0000–)	Screw, Hex, M8 X 1.25 X 90, 8.8	4
	15	1208106	(0000–)	Plate Wldt, Bearing Clamp	2
	16	1207436	(0000–)	Cable, Push / Pull, 052.6L .25–28/.25–28	1
	17	14595	(0000–)	Clevis, Adj, 0.25pin, 0.25–28 Rh, Pl	1
	18	605070	(0000–)	Pin, Clevis, 0.25d X 0.79l	1
	19	08178	(0000–)	Pin, Cotter, .062 X 0.75	1
	20	32899	(0000–)	Nut, Hex, Jam, .25–28	1
▽		9020263	(0000–)	Tire Assy, Rear, Std (1) [T17]	2
▲	21	1212112	(0000–)	Tire, Solid, 15.0 X 5.0, Poly, Std	1
▲▽		9020265	(0000–)	Wheel Bearing Kit, Rear, Afmkt [T17]	1
▲▲	22	51338	(0000–)	Bearing, Cup, 2.56d 0.55w	2
▲▲	23	51339	(0000–)	Bearing, Cone, 1.38b 0.71w	2
▲▲	24	32969	(0000–)	Washer, Flat, 1.00, Sae	1
▲▲	25	14242	(0000–)	Nut, Hex, Sltd, 1.00–20	1
▲▲	26	08202	(0000–)	Pin, Cotter, .125 X 1.75	1
▲▲	27	54390	(0000–)	Cap, Hub, Dust, 2.57d 0.77l	1
▽		9020264	(0000–)	Tire Assy, Rear, High Traction (1) [T17] (Option)	2
▲	21	1208203	(0000–)	Tire, Solid, 15.0 X 5.0 [Hi–Traction]	1
▲▽		9020265	(0000–)	Wheel Bearing Kit, Rear, Afmkt [T17]	1
▲▲	22	51338	(0000–)	Bearing, Cup, 2.56d 0.55w	2
▲▲	23	51339	(0000–)	Bearing, Cone, 1.38b 0.71w	2
▲▲	24	32969	(0000–)	Washer, Flat, 1.00, Sae	1
▲▲	25	14242	(0000–)	Nut, Hex, Sltd, 1.00–20	1
▲▲	26	08202	(0000–)	Pin, Cotter, .125 X 1.75	1
▲▲	27	54390	(0000–)	Cap, Hub, Dust, 2.57d 0.77l	1
	28	1207184	(0000–)	Shaft Wldt, Brake	1
	29	39349	(0000–)	Washer, Flat, 0.31, Sae	4

Fig. 15 – Scrub Head Lift Group

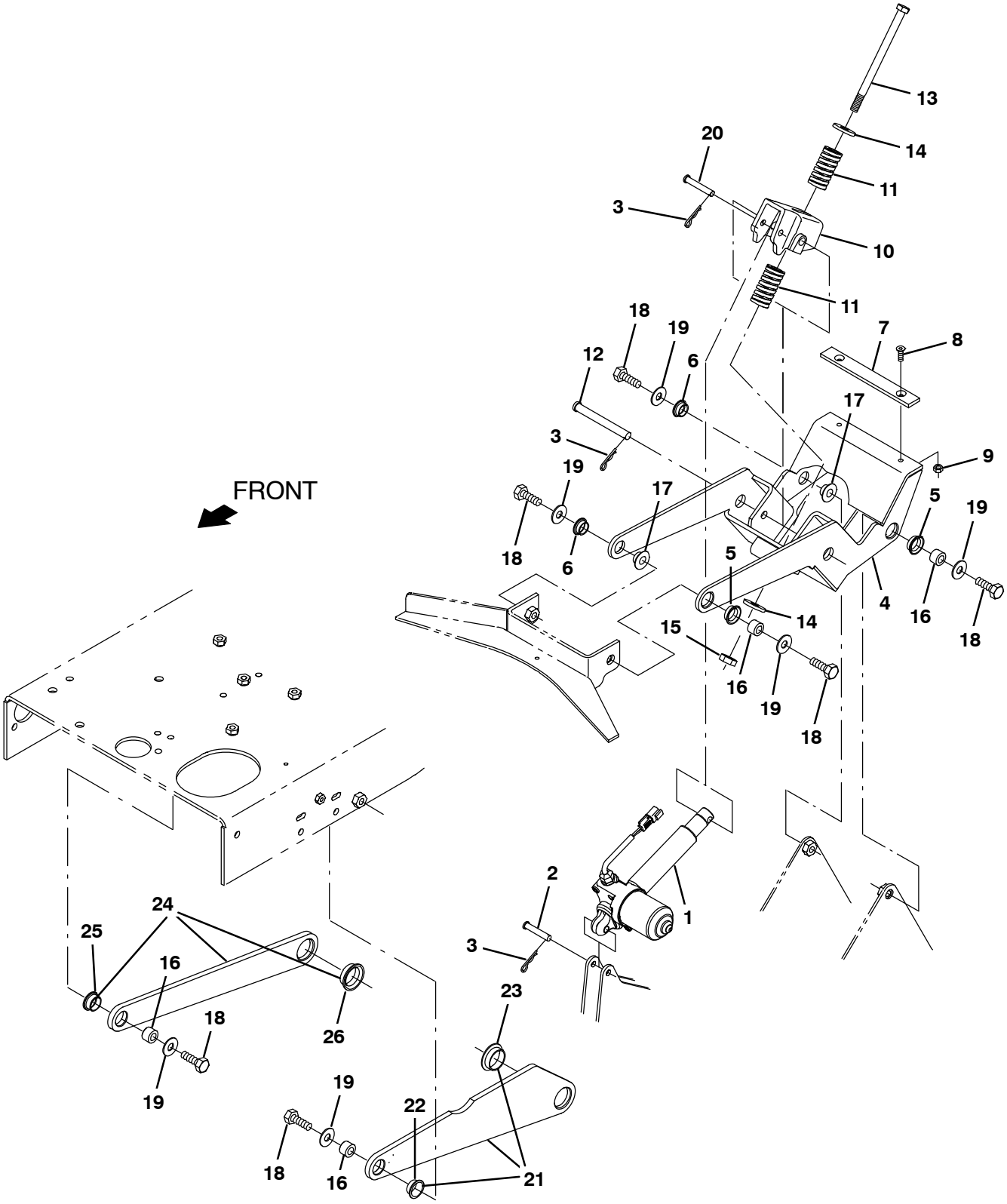

356437

Fig. 15 – Scrub Head Lift Group

	Ref.	Part No.	Serial Number	Description	Qty.
	1	1206470	(0000–)	Actuator, 36vdc, 5.00strk, 1100lb	1
	2	29584	(0000–)	Pin, Clevis, 0.37d X 2.00l	1
	3	44906	(0000–)	Pin, Cotter, Hair, 0.38d .093 Wir	3
▽		9020250	(0000–)	Link Assy, Lift, Head, Afmkt [T17]	1
▲	4	1204713	(0000–)	Arm Wldt, Lift	1
▲	5	1037827	(0000–)	Bushing, Flng, 0.88b 1.0d 0.37l	2
▲	6	04928	(0000–)	Bushing, Flng, 0.50b 0.59d 0.38l	2
▲	7	1205133	(0000–)	Pad, Stop, Rbr	1
▲	8	16879	(0000–)	Screw, Flt, Soc, M6 X 1.00 X 20, 10.9	2
▲	9	08712	(0000–)	Nut, Hex, Lock, M6 X 1.00, Nl, Ss	2
	10	1209769	(0000–)	Bellcrank, Spring, Machined	1
	11	1208208	(0000–)	Spring, Cmpr, 1.25od Flat Wir 02.5l	2
	12	59668	(0000–)	Pin, Clevis, 0.50d X 4.50l	1
	13	1212623	(0000–)	Screw, Hex, M12 X 1.75 X 180, 8.8	1
	14	35843	(0000–)	Washer, Flat, 0.53b 1.50d .19, Stl	2
	15	09741	(0000–)	Nut, Hex, Lock, M12 X 1.75, Nl, Ss	1
	16	1210262	(0000–)	Sleeve, P/M, 0.50b 0.87d 0.6l [430ss]	4
	17	1210177	(0000–)	Sleeve, P/M, Flng, 0.50b 1.25/0.75d 0.4l	2
	18	06969	(0000–)	Screw, Hex, M12 X 1.75 X 40, 8.8	6
	19	1210179	(0000–)	Washer, Flat, 0.50b 1.25d 0.8, Stl, Pl	6
	20	222260	(0000–)	Pin, Clevis, 0.37d X 2.25l	1
▽	21	9020251	(0000–)	Plate Assy, Side, Head, Afmkt [T17]	1
▲	22	1210630	(0000–)	Bushing, Flng, 0.88b 1.0d 0.50l	1
▲	23	1210624	(0000–)	Bushing, Flng, 1.25b 1.41d 0.50l	1
▽	24	9020253	(0000–)	Plate Assy, Side, Head, Afmkt [T17]	1
▲	25	1210630	(0000–)	Bushing, Flng, 0.88b 1.0d 0.50l	1
▲	26	1210624	(0000–)	Bushing, Flng, 1.25b 1.41d 0.50l	1

Fig. 16 – Scrub Head and Drive Motor Group, Disk

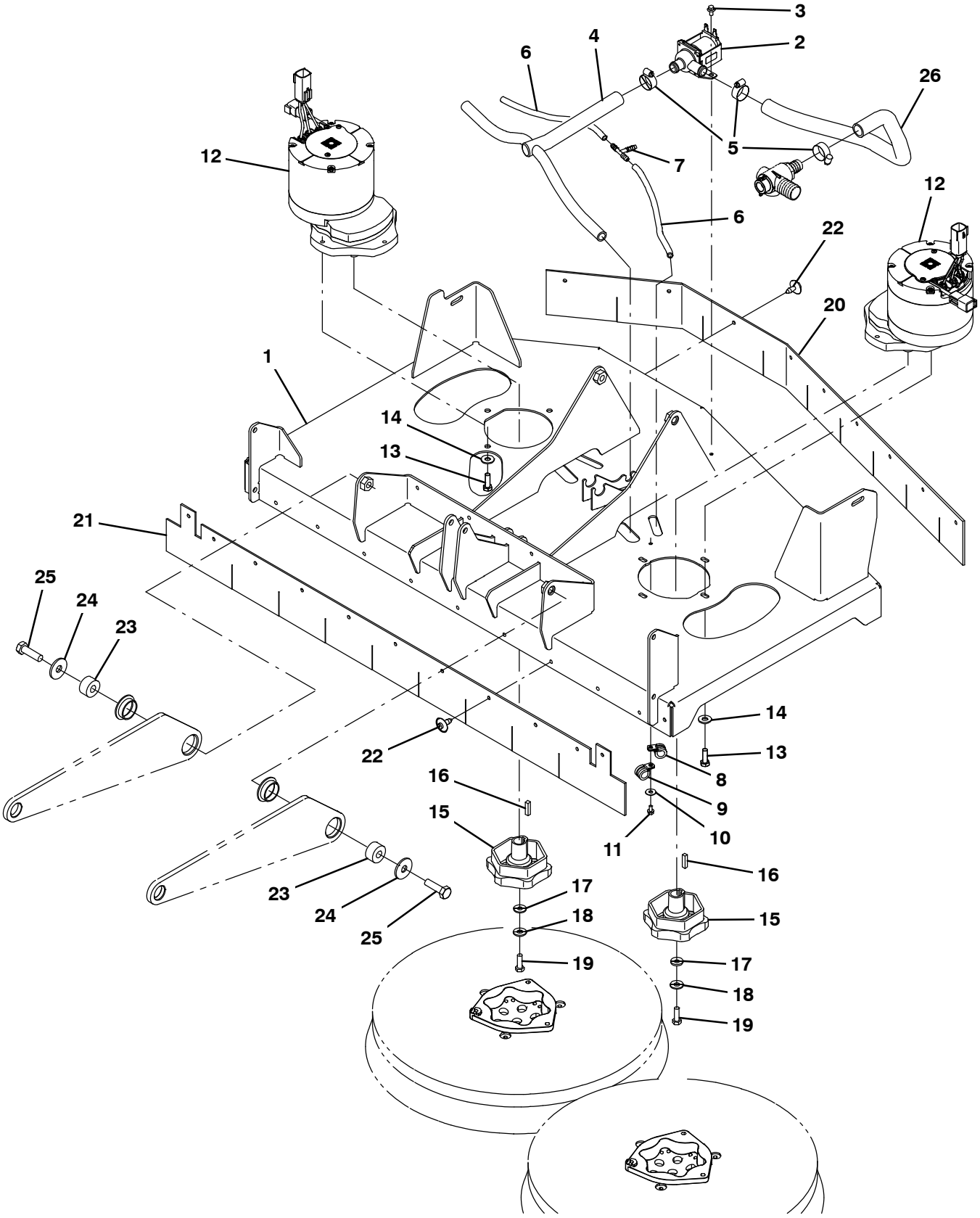

356436

Fig. 16 – Scrub Head and Drive Motor Group, Disk

	Ref.	Part No.	Serial Number	Description	Qty.
	1	1213200	(0000–)	Head Wldt, Disk	1
	2	84028	(0000–)	Valve, Water, Solenoid – 36v	1
	3	222158	(0000–)	Screw, Hex, M6 X 1.00 X 10, Fmg	2
	4	1205131	(0000–)	Manifold, Soltn	1
	5	63810	(0000–)	Clamp, Hose, Wormdrive, 0.56–1.06d, .56w	3
	6	1011409	(0000–)	Hose, Afmkt, Pvc, Brd, 0.25id, 01ft	2
	7	150713	(0000–)	Fitting, Plstc, Tee, Bm04/Bm04/Bm04	1
	8	1016354	(0000–)	Clamp, Cable, Ss, 0.50d X 0.50w [Insul]	2
	9	07471	(0000–)	Clamp, Cable, Stl, 0.75d X 0.75w, 1hole	2
	10	01684	(0000–)	Washer, Flat, 0.27b 0.69d .05, Ss	2
	11	222158	(0000–)	Screw, Hex, M6 X 1.00 X 10, Fmg	2
▽		9020238	(0000–)	Motor Assy, Disk, Afmkt [T17]	2
▲	12	1204356	(0000–)	Motor, Ele, 36vdc, 350 Rpm 1.5hp Gear	1
▲	13	09010	(0000–)	Screw, Hex, M8 X 1.25 X 25, Ss	4
▲	14	01685	(0000–)	Washer, Flat, 0.38b 0.88d .08, Ss	4
▲	15	377364	(0000–)	Hub, Drive, Brush, Disk, 0.75b [6t]	1
▲	16	00928	(0000–)	Key, Sq, 0.25 X 0.25, 1.00l	1
▲	17	41186	(0000–)	Washer, Flat, Belleville, .31	1
▲	18	01686	(0000–)	Washer, Flat, 0.44b 1.00d .08, Ss	1
▲	19	09010	(0000–)	Screw, Hex, M8 X 1.25 X 25, Ss	1
▽		9020242	(0000–)	Skirt Kit, Disk, Afmkt [T17]	1
▲	20	1204458	(0000–)	Skirt, Rbr, Rear	1
▲	21	1204460	(0000–)	Skirt, Rbr, Front	1
▲	22	72968	(0000–)	Rivet, Plstc, .250d X 0.90	20
	23	1210660	(0000–)	Pivot, Lift	2
	24	1210667	(0000–)	Washer, Flat, 0.5b 1.5d .12, Stl, Pl	2
	25	06969	(0000–)	Screw, Hex, M12 X 1.75 X 40, 8.8	2
	26	1045041	(0000–)	Hose, Afmkt, Pvc, Wir, 0.75 Id, 03Ft, Clr	1

Fig. 17 – Scrub Head Frame Group, Cylindrical

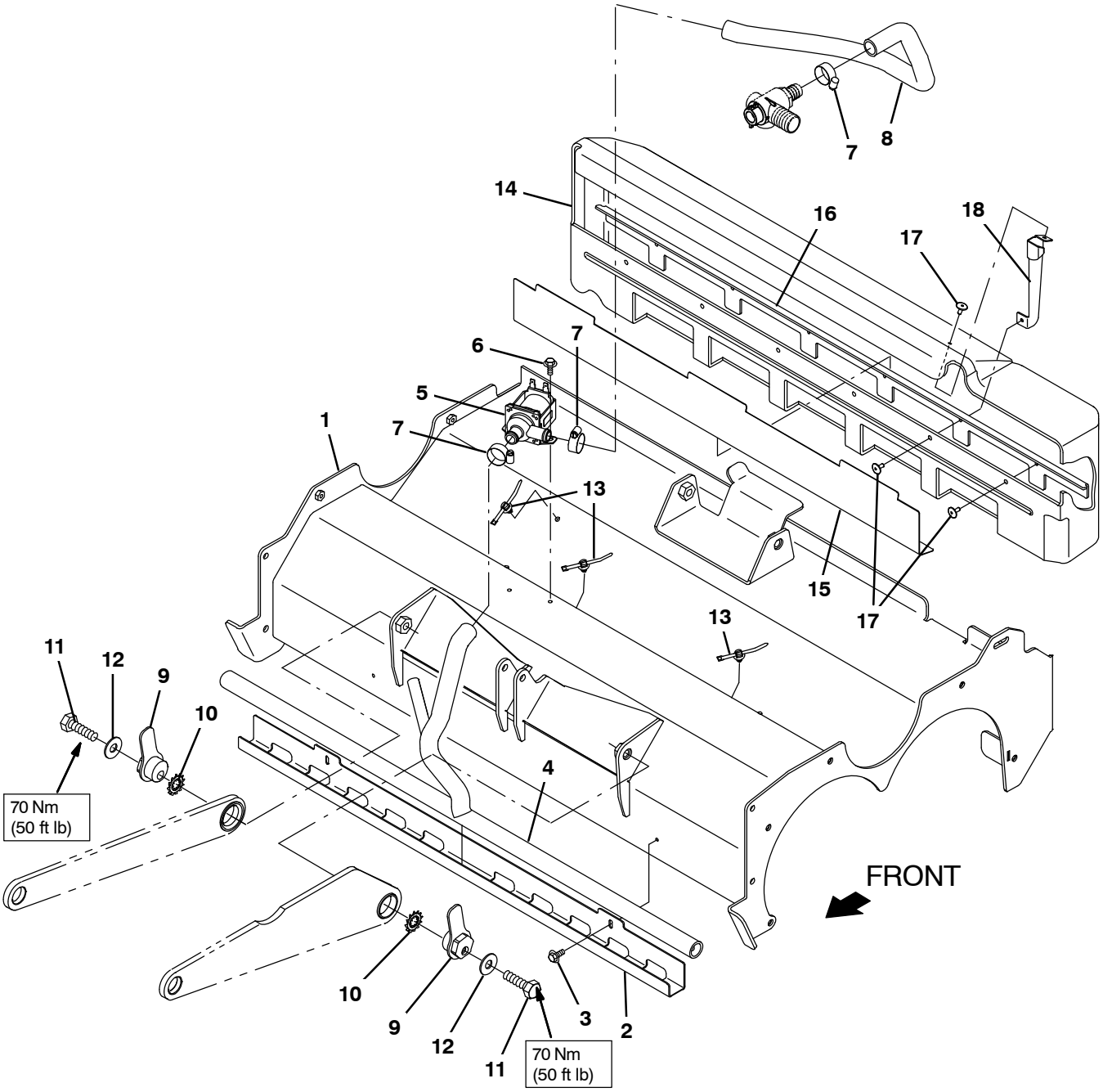

356461

Fig. 17 – Scrub Head Frame Group, Cylindrical

	Ref.	Part No.	Serial Number	Description	Qty.
	1	1213161	(0000–)	Housing Wldt, Scb, Cyl	1
	2	1205011	(0000–)	Clamp Bracket, Distribution	1
	3	223198	(0000–)	Screw, Hex, M5 X 0.80 X 10, Fmg	2
	4	1205010	(0000–)	Manifold, Bar, Spray	1
	5	84028	(0000–)	Valve, Water, Solenoid – 36v	1
	6	74455	(0000–)	Screw, Hex, M6 X 1.00 X 12, Fmg	2
	7	63810	(0000–)	Clamp, Hose, Wormdrive, 0.56–1.06d, .56w	3
	8	1045041	(0000–)	Hose, Afmkt, Pvc, Wir, 0.75id, 03ft, Clr	1
	9	1210618	(0000–)	Pivot Wldt	2
	10	41143	(0000–)	Washer, Lock, Int–Ext, 0.50	2
	11	06971	(0000–)	Screw, Hex, M12 X 1.75 X 50, 8.8	2
	12	1210179	(0000–)	Washer, Flat, 0.50b 1.25d 0.8, Stl, Pl	2
	13	1210807	(0000–)	Wire, Tie [W/.25” Fir Tree Clip]	3
▽		9020215	(0000–)	Tray Kit, Debris, Cyl, Afmkt [T17]	1
▲	14	1207108	(0000–)	Hopper, Debris, Trimmed	1
▲	15	1207126	(0000–)	Angle, Stl, Perforated .03	1
▲	16	1207127	(0000–)	Lip, Tray, Debris	1
▲	17	68567	(0000–)	Rivet, Blind, .188d X 0.53 X .62d, Alm	7
▲	18	1227455	(0000–)	Bracket, Sppt, Debris Tray [T17/M17]	1

Fig. 18 – Scrub Head Drive Motors Group, Cylindrical

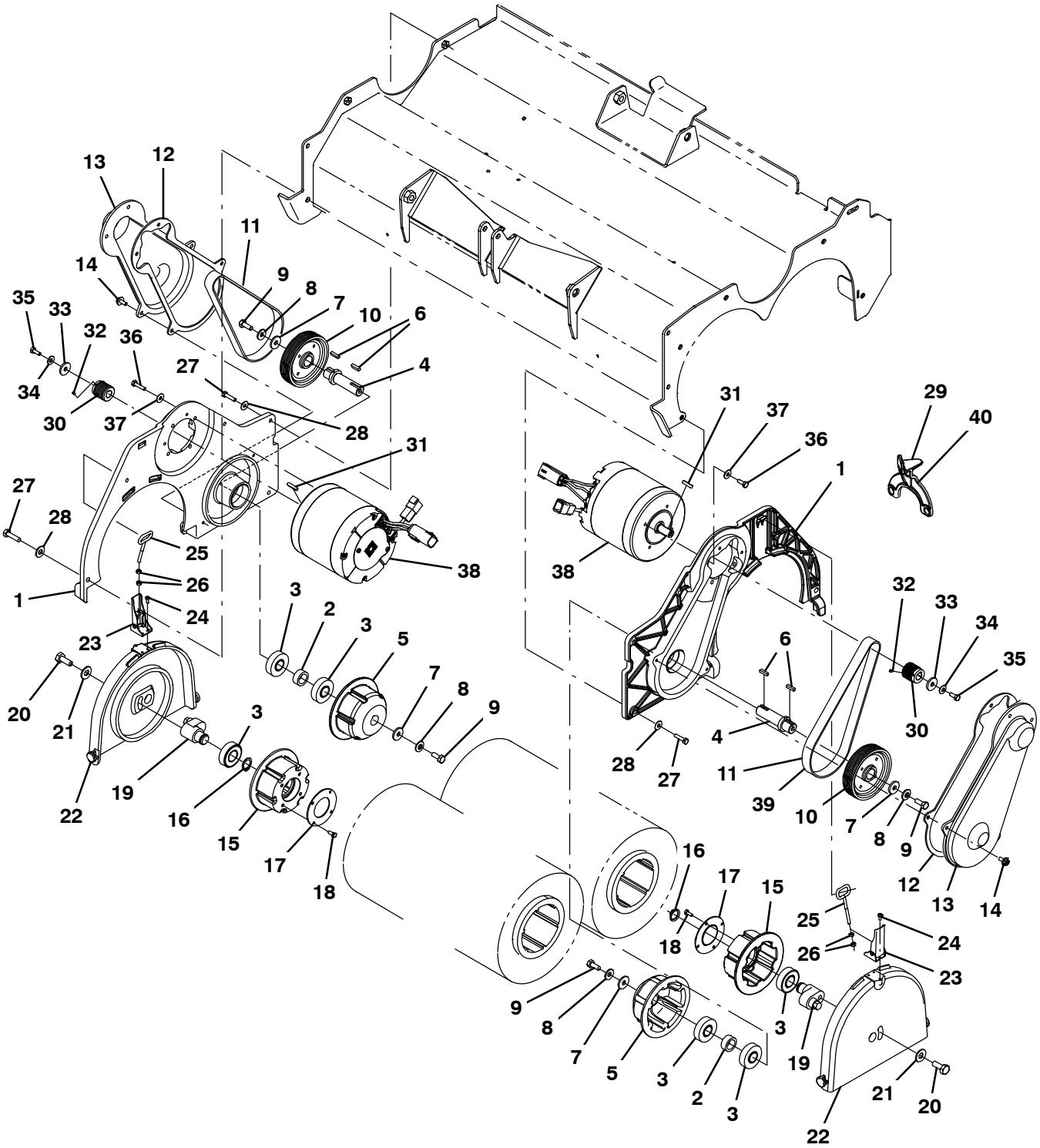

356462

Fig. 18 – Scrub Head Drive Motors Group, Cylindrical

	Ref.	Part No.	Serial Number	Description	Qty.
▽		9020235	(0000–)	Panel Assy, Cyl, Afmkt [T17]	2
▲	1	1204637	(0000–)	Plate, Side, Wrap	1
▲	2	1204634	(0000–)	Spacer, Brg	1
▲	3	46390	(0000–)	Bearing, Ball, 0.79b 1.85d 0.55w	3
▲	4	1204643	(0000–)	Shaft, Drive, Brush	1
▲	5	1204881	(0000–)	Plug, Drive, Brush	1
▲	6	00911	(0000–)	Key, Sq, 0.19 X 0.19, 0.75l	2
▲	7	1017218	(0000–)	Washer, Flat, 0.32b 1.00d .12, Ss	2
▲	8	41186	(0000–)	Washer, Flat, Belleville, .31	2
▲	9	12273	(0000–)	Screw, Hex, M8 X 1.25 X 20, Nl, Ss	2
▲	10	1204639	(0000–)	Sheave, 09grv, 4.13pd 0.75b [Pj]	1
▲	11	1204640	(0000–)	Belt Kit, Drive	1
▲▽		9020245	(0000–)	Cover Kit, Belt, Cyl, Afmkt [T7] (2 Kits Required)	1
▲▲	12	1204880	(0000–)	Gasket, Belt, Cover	1
▲▲	13	1204642	(0000–)	Cover, Belt	1
▲▲	14	1034731	(0000–)	Screw, Hex, M6 X 1.00 X 16, Ss, Sems	4
▲▽		9020240	(0000–)	Door Assy, Idler, Cyl, Afmkt [T17] (2 Kits Required)	2
▲▲	15	1204790	(0000–)	Plug, Idler, Brush	1
▲▲	16	26428	(0000–)	Ring, Retaining, Ext, 0.75d, Hd	1
▲▲	17	1056838	(0000–)	Retainer, Brg, Iron Gray	1
▲▲	18	09738	(0000–)	Screw, Hex, M5 X 0.80 X 12, Ss	4
▲▲	19	1204791	(0000–)	Cam, Adj, Brush	1
▲▲	20	09028	(0000–)	Screw, Hex, M10 X 1.50 X 25, Ss	1
▲▲	21	01686	(0000–)	Washer, Flat, 0.44b 1.00d .08, Ss	1
▲▲	22	1204441	(0000–)	Cover, Plug, Idler	1
▲▲	23	386257	(0000–)	Latch	1
▲▲	24	49697	(0000–)	Screw, Pan, Phl, M4 X 0.70 X 10, Ss	3
▲▲	25	386274	(0000–)	Hook Wldt, latch	1
▲▲	26	50335	(0000–)	Nut, Hex, Std, M5 X 0.80, 8	2
▲	27	09007	(0000–)	Screw, Hex, M6 X 1.00 X 25, Ss	5
▲	28	01684	(0000–)	Washer, Flat, 0.27b 0.69d .05, Ss	5
▲	29	1212849	(0000–)	Tool, Installation, Belt	1
▽		9020239	(0000–)	Motor Assy, Cyl, Afmkt [T17]	2
▲	30	1204638	(0000–)	Sheave, 09grv, 1.18pd 0.55b [Pj]	1
▲	31	1014328	(0000–)	Key, Sq, 05mm X 05mm, 25mml	1
▲	32	222818	(0000–)	Screw, Set, Soc, 08–32 X 0.25, Nl	1
▲	33	1017218	(0000–)	Washer, Flat, 0.32b 1.00d .12, Ss	1
▲	34	41185	(0000–)	Washer, Flat, Belleville, .25	1
▲	35	06944	(0000–)	Screw, Hex, M6 X 1.00 X 16	1
▲	36	15678	(0000–)	Screw, Hex, M6 X 1.00 X 16, Ss	4
▲	37	01684	(0000–)	Washer, Flat, 0.27b 0.69d .05, Ss	4
▲	38	1204357	(0000–)	Motor, Ele, 36vdc, 1750 Rpm 1.5hp	1
▽		9020237	(0000–)	Belt, Kit, Cyl, Afmkt [T17]	2
▲	39	1204640	(0000–)	Belt, Drive	1
▲	40	1212849	(0000–)	Tool, Installation, Belt	1

Fig. 19 – Scrub Head Side Squeegee Group, Right Hand

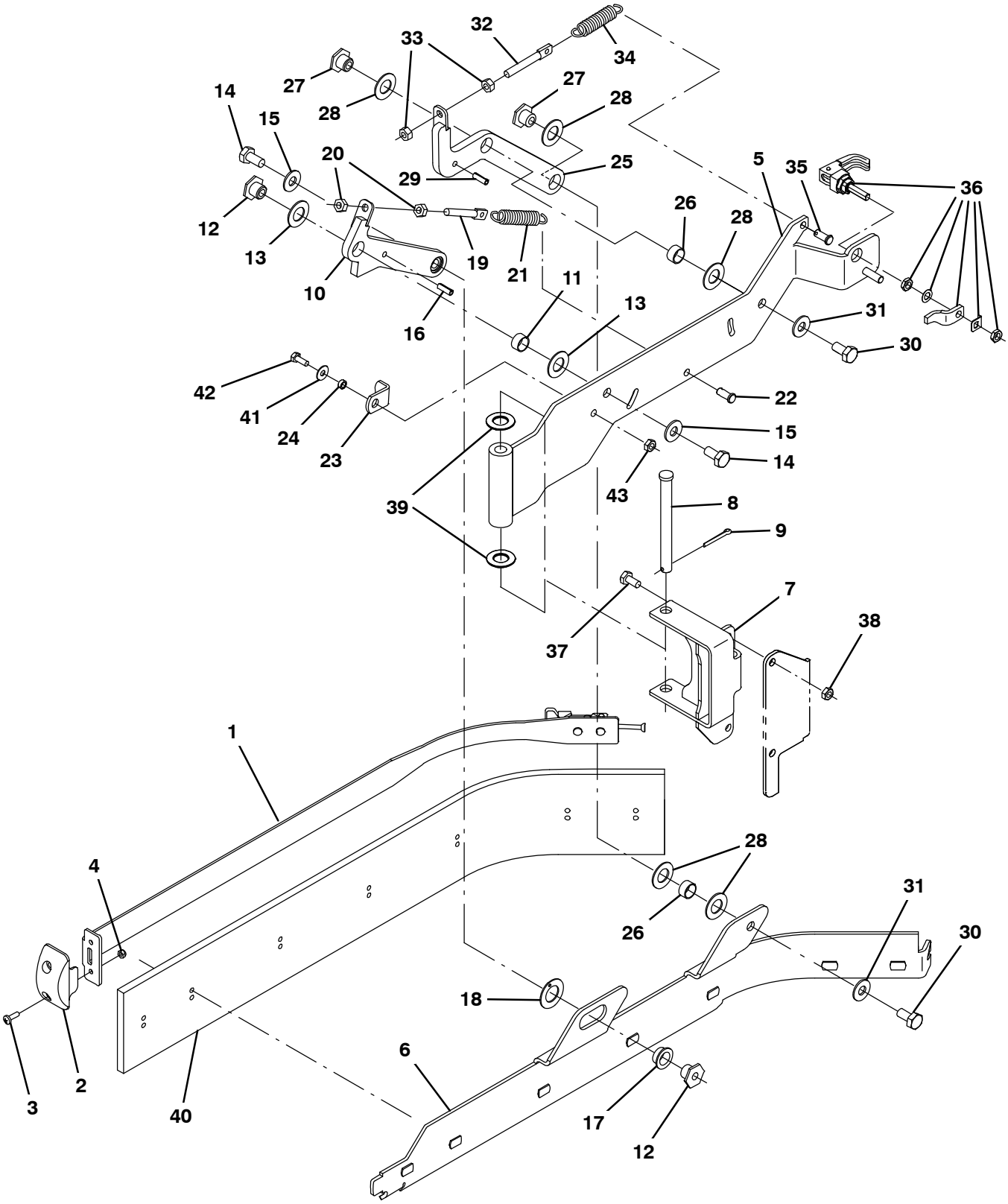

356435

Fig. 19 – Scrub Head Side Squeegee Group, Right Hand

	Ref.	Part No.	Serial Number	Description	Qty.
	1	1210430	(0000–)	Retainer Wldt, Side Sqge, With Latch	1
	2	1211884	(0000–)	Guide, Sqge, Side	1
	3	1045487	(0000–)	Screw, Pan, Phl, M5 X 0.80 X 16, Blk	2
	4	09739	(0000–)	Nut, Hex, Lock, M5 X 0.80, Nl, Ss	2
	5	1213007	(0000–)	Arm Wldt, Rh	1
	6	1213229	(0000–)	Holder Wldt, Blade, Rh	1
	7	1213093	(0000–)	Bracket Wldt, Pivot, Sqge	1
	8	51538	(0000–)	Pin, Clevis, 0.50d X 5.00l	1
	9	08236	(0000–)	Pin, Cotter, .156 X 1.25	1
▽		9020243	(0000–)	Arm Kit, Sqge, Front, Rh, Afmkt	1
▲	10	1213061	(0000–)	Arm Wldt, Front, Rh	1
▲	11	71607	(0000–)	Bushing, Sleeve, 0.63b 0.72d 0.38l	1
▲	12	1022846	(0000–)	Nut, T, M10 X 1.50 X 15.80od X 13.0l	2
▲	13	64425	(0000–)	Washer, Thrust, 0.61b 1.25d .06, Fgl	2
▲	14	09291	(0000–)	Screw, Hex, M10 X 1.50 X 20, Ss	2
▲	15	01686	(0000–)	Washer, Flat, 0.44b 1.00d .08, Ss	2
▲	16	17404	(0000–)	Pin, Roll, .250d X 0.75l, .250/.256	1
▲	17	25735	(0000–)	Bushing, Flng, 0.63b 0.75d 0.38l	1
▲	18	04846	(0000–)	Washer, Thrust, 0.79b 1.42d 0.06[Garlok]	1
▲	19	386088	(0000–)	Bolt, Eye, M8 X 1.25 X 070mm, 05.50 Eye	1
▲	20	07786	(0000–)	Nut, Hex, Std, M8 X 1.25, Ss	2
▲	21	363469	(0000–)	Spring, Extn, 0.75od 0.10wir 03.0l	1
▲	22	10120	(0000–)	Clevis, 0.31d X 0.75l	1
	23	386391	(0000–)	Bracket, Latch, Dbl Scb, Sqge, Side	1
	24	80491	(0000–)	Sleeve, P/M, 0.25b 0.38d 0.2l [430ss]	1
▽		9020244	(0000–)	Arm Kit, Sqge, Rear, Rh, Afmkt	1
▲	25	1213060	(0000–)	Arm Wldt, Rear, Rh	1
▲	26	71607	(0000–)	Bushing, Sleeve, 0.63b 0.72d 0.38l	2
▲	27	1022846	(0000–)	Nut, T, M10 X 1.50 X 15.80od X 13.0l	2
▲	28	64425	(0000–)	Washer, Thrust, 0.61b 1.25d .06, Fgl	5
▲	29	17404	(0000–)	Pin, Roll, .250d X 0.75l, .250/.256	1
▲	30	09291	(0000–)	Screw, Hex, M10 X 1.50 X 20, Ss	2
▲	31	01686	(0000–)	Washer, Flat, 0.44b 1.00d .08, Ss	2
▲	32	386088	(0000–)	Bolt, Eye, M8 X 1.25 X 070mm, 05.50 Eye	1
▲	33	07786	(0000–)	Nut, Hex, Std, M8 X 1.25, Ss	2
▲	34	363469	(0000–)	Spring, Extn, 0.75od 0.10wir 03.0l	1
▲	35	10120	(0000–)	Clevis, 0.31d X 0.75l	1
	36	1065134	(0000–)	Latch, Cmpr, Yel Grip	1
	37	16735	(0000–)	Screw, Hex, M8 X 1.25 X 16, 8.8	2
	38	08713	(0000–)	Nut, Hex, Lock, M8 X 1.25, Nl, Ss	2
	39	64425	(0000–)	Washer, Thrust, 0.61b 1.25d .06, Fgl	2
	40	1213211	(0000–)	Blade, Sqge, Side, Linatex	1
	40	1213266	(0000–)	Blade, Sqge, Side, Urethane (Option)	1
	40	1213267	(0000–)	Blade, Sqge, Side, Rubber (Option)	1
	41	01684	(0000–)	Washer, Flat, 0.27b 0.69d .05, Ss	1
	42	15678	(0000–)	Screw, Hex, M6 X 1.00 X 16, Ss	1
	43	08712	(0000–)	Nut, Hex, Lock, M6 X 1.00, Nl, Ss	1

Fig. 20 – Scrub Head Side Squeegee Group, Left Hand

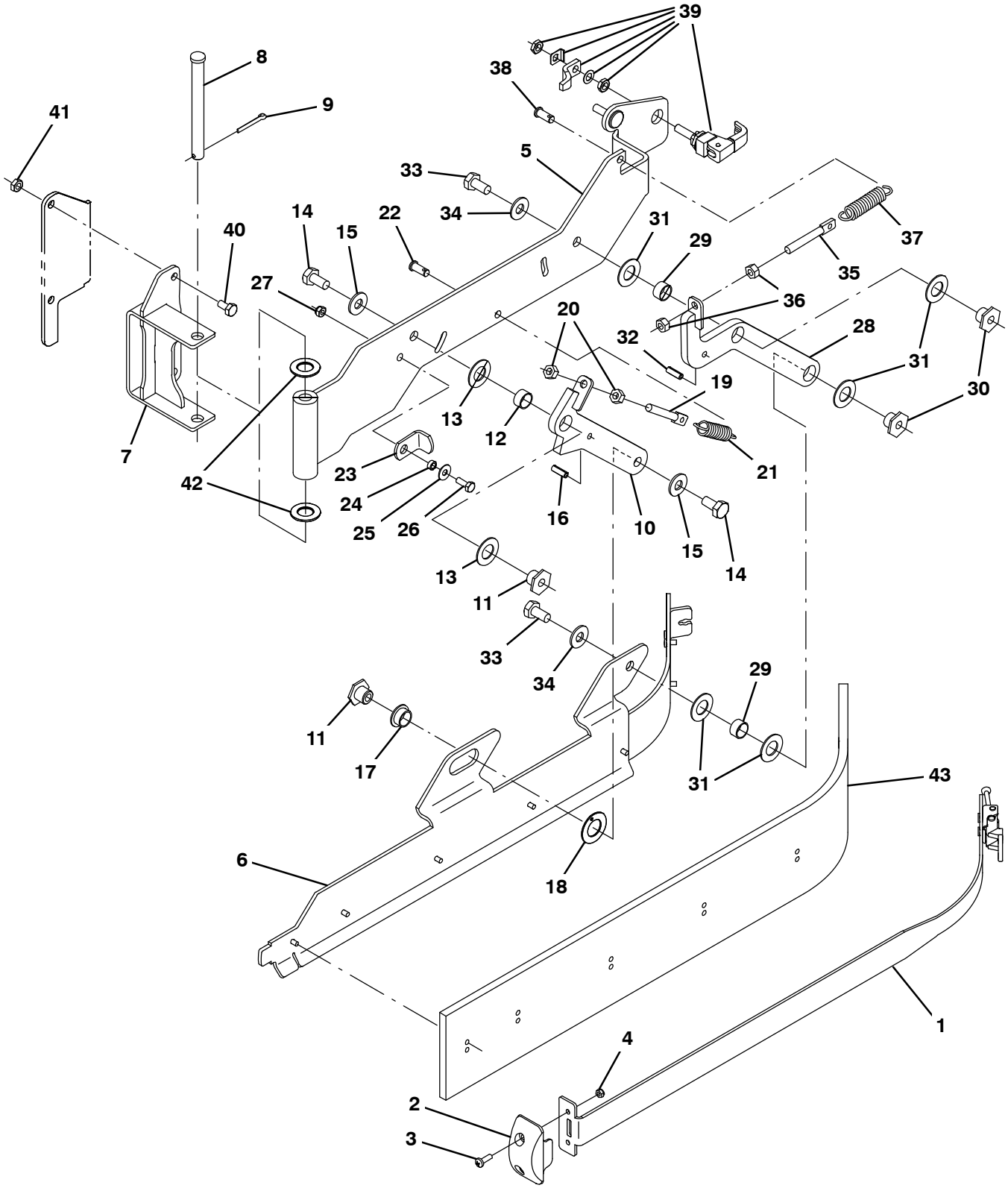

356434

Fig. 20 – Scrub Head Side Squeegee Group, Left Hand

	Ref.	Part No.	Serial Number	Description	Qty.
	1	1210430	(0000–)	Retainer Wldt, Side Sqge, With Latch	1
	2	1211884	(0000–)	Guide, Sqge, Side	1
	3	1045487	(0000–)	Screw, Pan, Phl, M5 X 0.80 X 16, Blk	2
	4	09739	(0000–)	Nut, Hex, Lock, M5 X 0.80, Nl, Ss	2
	5	1213228	(0000–)	Arm Wldt, Lh	1
	6	1213234	(0000–)	Holder Wldt, Blade, Lh	1
	7	1213093	(0000–)	Bracket Wldt, Pivot, Sqge	1
	8	51538	(0000–)	Pin, Clevis, 0.50d X 5.00l	1
	9	08236	(0000–)	Pin, Cotter, .156 X 1.25	1
▽		9013046	(0000–)	Arm Kit, Sqge, Front, Lh, Afmkt	1
▲	10	1213244	(0000–)	Arm Wldt, Front, Lh	2
▲	11	1022846	(0000–)	Nut, T, M10 X 1.50 X 15.80od X 13.0l	1
▲	12	71607	(0000–)	Bushing, Sleeve, 0.63b 0.72d 0.38l	1
▲	13	64425	(0000–)	Washer, Thrust, 0.61b 1.25d .06, Fgl	2
▲	14	09291	(0000–)	Screw, Hex, M10 X 1.50 X 20, Ss	2
▲	15	01686	(0000–)	Washer, Flat, 0.44b 1.00d .08, Ss	2
▲	16	17404	(0000–)	Pin, Roll, .250d X 0.75l, .250/.256	1
▲	17	25735	(0000–)	Bushing, Flng, 0.63b 0.75d 0.38l	1
▲	18	04846	(0000–)	Washer, Thrust, 0.79b 1.42d 0.06[Garlok]	1
▲	19	386088	(0000–)	Bolt, Eye, M8 X 1.25 X 070mm, 05.50 Eye	1
▲	20	07786	(0000–)	Nut, Hex, Std, M8 X 1.25, Ss	2
▲	21	363469	(0000–)	Spring, Extn, 0.75od 0.10wir 03.0l	1
▲	22	10120	(0000–)	Clevis, 0.31d X 0.75l	1
	23	386391	(0000–)	Bracket, Latch, Dbl Scb, Sqge, Side	1
	24	80491	(0000–)	Sleeve, P/M, 0.25b 0.38d 0.2l [430ss]	1
	25	01684	(0000–)	Washer, Flat, 0.27b 0.69d .05, Ss	1
	26	15678	(0000–)	Screw, Hex, M6 X 1.00 X 16, Ss	1
	27	08712	(0000–)	Nut, Hex, Lock, M6 X 1.00, Nl, Ss	1
▽		9013047	(0000–)	Arm Kit, Sqge, Rear, Lh, Afmkt	1
▲	28	1213243	(0000–)	Arm Wldt, Rear, Lh	1
▲	29	71607	(0000–)	Bushing, Sleeve, 0.63b 0.72d 0.38l	2
▲	30	1022846	(0000–)	Nut, T, M10 X 1.50 X 15.80od X 13.0l	2
▲	31	64425	(0000–)	Washer, Thrust, 0.61b 1.25d .06, Fgl	5
▲	32	17404	(0000–)	Pin, Roll, .250d X 0.75l, .250/.256	1
▲	33	09291	(0000–)	Screw, Hex, M10 X 1.50 X 20, Ss	2
▲	34	01686	(0000–)	Washer, Flat, 0.44b 1.00d .08, Ss	2
▲	35	386088	(0000–)	Bolt, Eye, M8 X 1.25 X 070mm, 05.50 Eye	1
▲	36	07786	(0000–)	Nut, Hex, Std, M8 X 1.25, Ss	2
▲	37	363469	(0000–)	Spring, Extn, 0.75od 0.10wir 03.0l	1
▲	38	10120	(0000–)	Clevis, 0.31d X 0.75l	1
	39	1065134	(0000–)	Latch, Cmpr, Yel Grip	1
	40	16735	(0000–)	Screw, Hex, M8 X 1.25 X 16, 8.8	2
	41	08713	(0000–)	Nut, Hex, Lock, M8 X 1.25, Nl, Ss	2
	42	64425	(0000–)	Washer, Thrust, 0.61b 1.25d .06, Fgl	2
	43	1213211	(0000–)	Blade, Sqge, Side, Linatex	1
	43	1213266	(0000–)	Blade, Sqge, Side, Urethane (Option)	1
	43	1213267	(0000–)	Blade, Sqge, Side, Rubber (Option)	1

Fig. 21 – Solution Tank Group

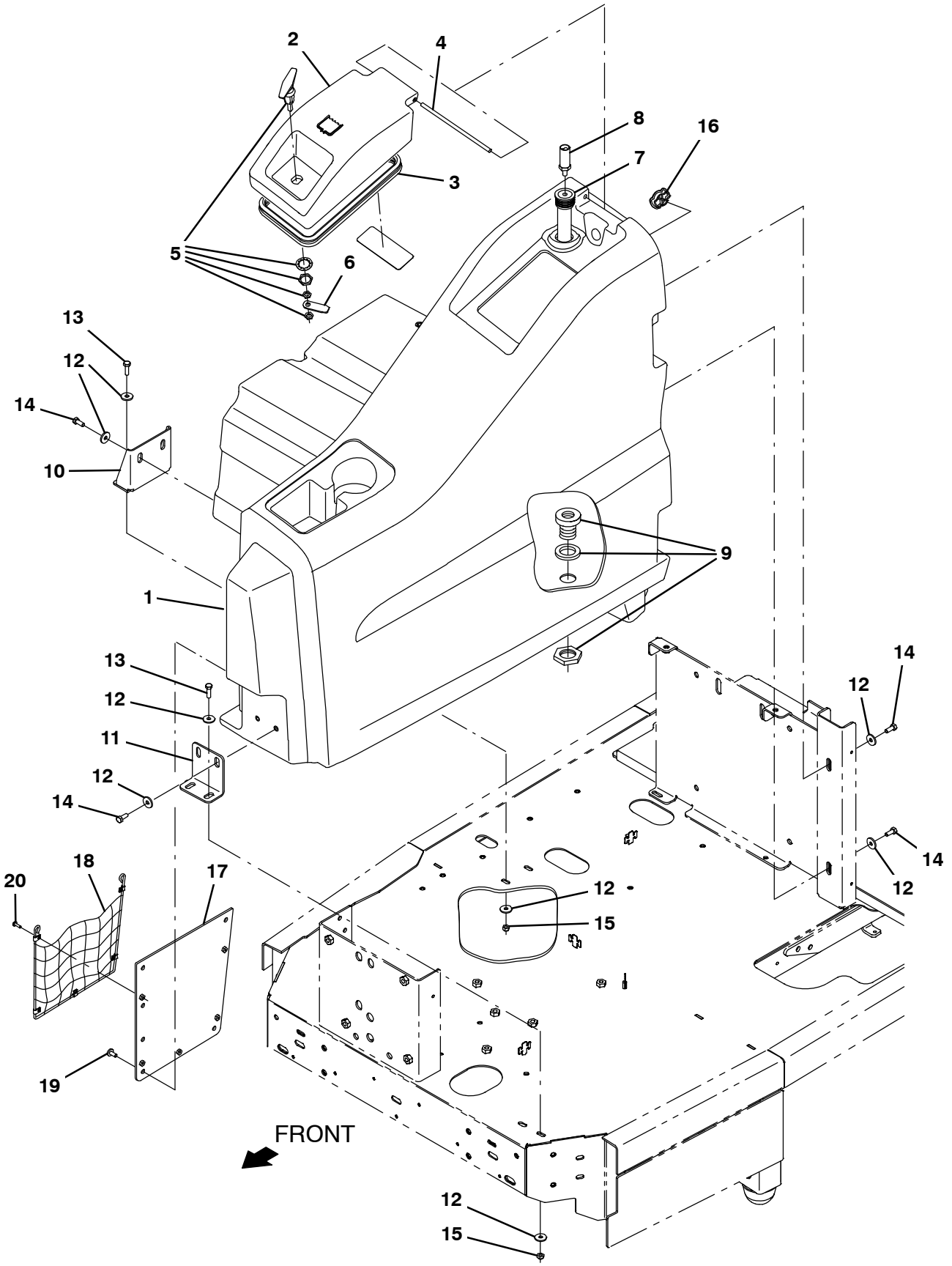

356424 – CE

Fig. 21 – Solution Tank Group

Ref.	Part No.	Serial Number	Description	Qty.
1	9020210	(0000–)	Tank, Soltn, Afmkt [T17]	1
2	9020283	(0000–)	Cover Assy, Tank, Sol, Ce Afmkt [T17]	1
3	1066431	(0000–)	Seal, Afmkt, Bulb, Dual, 03ft [F/.30gap]	1
4	1060673	(0000–)	Bar, Rnd, Plastic, 0.31D 08.5L	1
5	386324	(0000–)	Handle	1
6	1206948	(0000–)	Bracket, Pawl, Handle	1
7	1212298	(0000–)	Tube Assy, 34.2l	1
8	1062651	(0000–)	Sensor, Press, 3 Psi, 8–30vdc	1
9	377349	(0000–)	Fitting, Plstc, Pf12/Pf12, Bh	1
10	1204114	(0000–0399)	Bracket, Mtg, Tank, Soltn, Rh	1
10	1218383	(0400–)	Bracket, Mtg, Tank, Soltn, Rh	1
11	1206060	(0000–)	Bracket, Mtg, Tank, Soltn, Front	1
12	1017218	(0000–)	Washer, Flat, 0.32b 1.00d .12, Ss	14
13	09010	(0000–)	Screw, Hex, M8 X 1.25 X 25, Ss	4
14	12273	(0000–)	Screw, Hex, M8 X 1.25 X 20, Nl, Ss	6
15	08713	(0000–)	Nut, Hex, Lock, M8 X 1.25, Nl, Ss	4
16	390994	(0000–)	Plug, Hole, Soltn Tank, Blk Pyu	1
17	1207229	(0000–)	Plate Wldt, Mesh	1
18	1207272	(0000–)	Mesh Assy, Cloth [T17]	1
19	1069311	(0000–)	Screw, Pan, Phl, M8 X 1.25 X 16, Blk	4
20	1045487	(0000–)	Screw, Pan, Phl, M5 X 0.80 X 16, Blk	5

Fig. 22 – Solution Supply Group

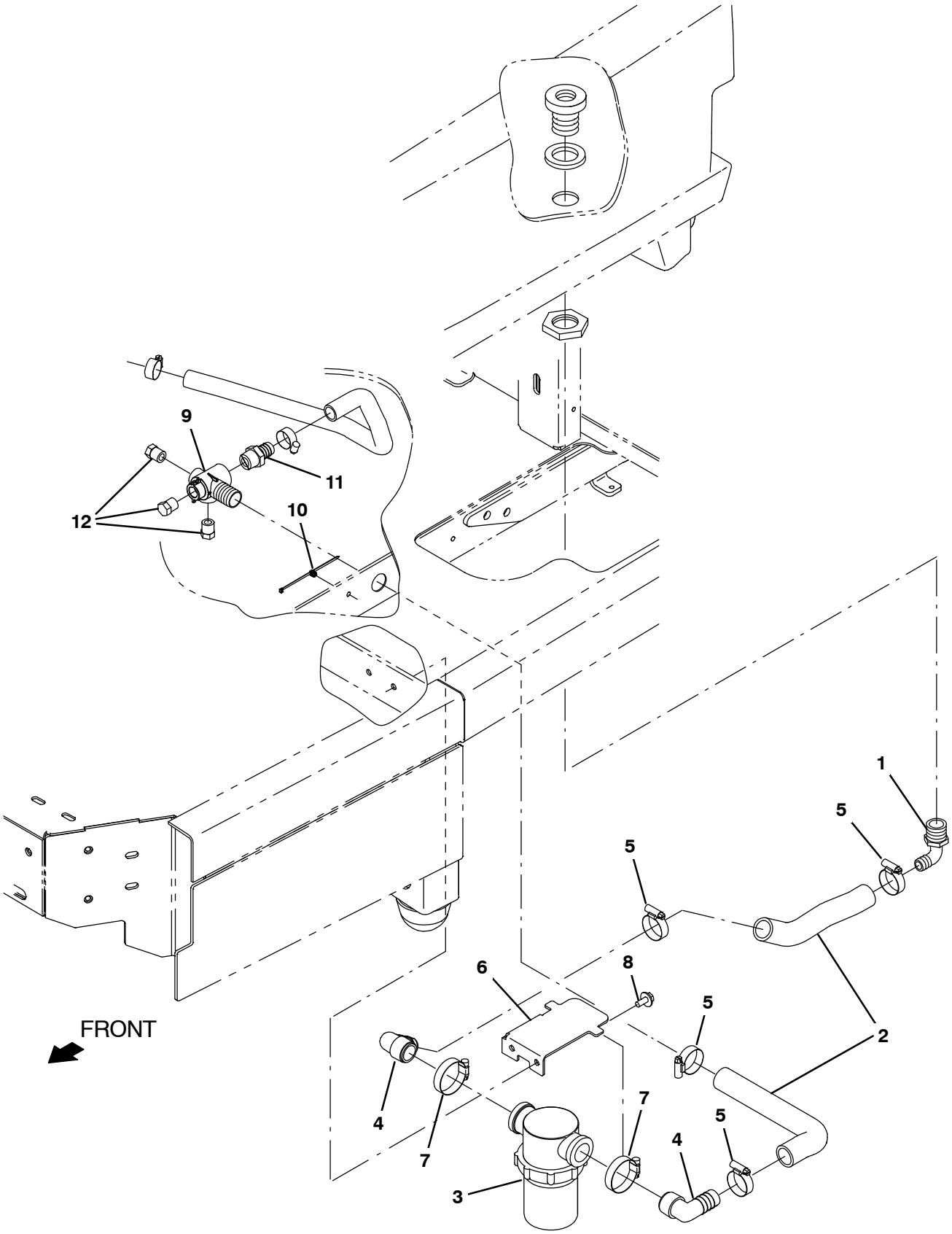

356425

Fig. 22 – Solution Supply Group

Ref.	Part No.	Serial Number	Description	Qty.
1	18595	(0000–)	Fitting, Plstc, E90, Bm16/Pm12	1
2	1214093	(0000–)	Hose, Afmkt, Pvc, Wir, 1.00Id, 01Ft, Clr	1
3	1205428	(0000–)	Filter, Screen, 080 Mesh, In–Line	1
4	1212887	(0000–)	Fitting, Plstc, E90, Bm16/Pm16	2
5	11399	(0000–)	Clamp, Hose, Wormdrive, 0.81–1.50d, .50w	4
6	1207518	(0000–)	Bracket, Mtg, Filter Hsg	1
7	11531	(0000–)	Clamp, Hose, Wormdrive, 1.06–2.00d, .56w	2
8	1020341	(0000–)	Screw, Hex, M8 X 1.25 X 20, Ss, Sems	2
9	1208486	(0000–)	Manifold, Solution Delivery, Main	1
10	1221161	(0000–)	Tie, Cable, Nyl, Push Mount, 76Mm Max D	1
11	79273–2	(0000–)	Fitting, Plstc, Str, Bm12/Pm12	1
12	630146	(0000–)	Fitting, Plug, Pm06, Hdpe	3

Fig. 23 – Recovery Tank Group

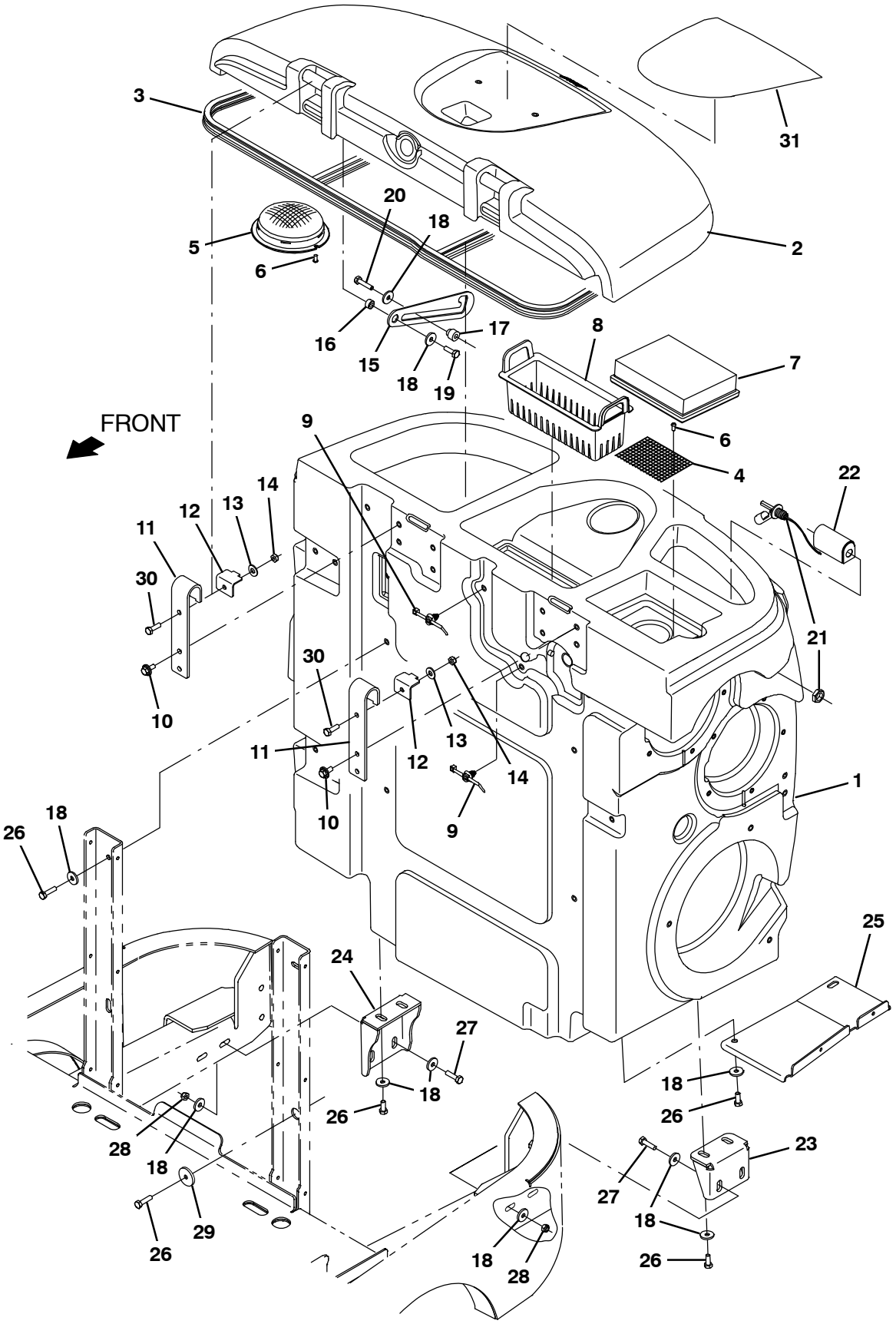

356426 – CE

Fig. 23 – Recovery Tank Group

Ref.	Part No.	Serial Number	Description	Qty.
1	9020211	(0000–)	Tank, Rec, Afmkt [T17]	1
2	9020285	(0000–)	Cover Assy, Rec Tank, CE Afmkt [T17]	1
3	1066434	(0000–)	Seal, Afmkt, Bulb, Dual, 12Ft [F/.30Gap]	1
4	1207887	(0000–)	Screen, Safety, Vac Fan	1
5	1026014	(0000–)	Screen, Vacuum	1
6	382320	(0000–)	Screw, Pan, Phl, 12–16 X 0.50, F/ Plstc	4
7	1037822	(0000–)	Filter, Panl, Dust, 2.0 X 06.1 X 07.6	1
8	1206119	(0000–)	Tray, Debris, Tank	1
9	1210807	(0000–)	Wire, Tie [W/.25” Fir Tree Clip]	2
10	1020341	(0000–)	Screw, Hex, M8 X 1.25 X 20, Ss, Sems	4
11	1206961	(0000–)	Bracket, Mtg, Cover, Recvy Tank	2
12	1207130	(0000–)	Bracket, Retain, Hinge, Cover	2
13	01685	(0000–)	Washer, Flat, 0.38B 0.88D .08, Ss	2
14	08713	(0000–)	Nut, Hex, lock, m8 X 1.25, ml, Ss	2
15	1057214	(0000–)	Plate, Arm, Prop	1
16	360460	(0000–)	Sleeve, P/M, 0.34b 0.63d 0.4l, Ss / Oil	1
17	230735	(0000–)	Sleeve, P/M, Flng, 0.33b 0.75/0.50d 0.8l	1
18	1017218	(0000–)	Washer, Flat, 0.32b 1.00d .12, Ss	19
19	12333	(0000–)	Screw, Hex, M8 X 1.25 X 25, Ss, Nl	1
20	59658	(0000–)	Screw, Hex, M8 X 1.25 X 35, Nl, Ss	1
21	385685	(0000–)	Sensor, Level, Liq, 14vdc 01a .62–11	1
22	1019285	(0000–)	Bracket, Protector, Float Switch	1
23	1205049	(0000–)	Bracket, Mtg, Tank, Recvy, Lh	1
24	1205797	(0000–)	Bracket, Mtg, Tank, Recvy, Rh	1
25	1207209	(0000–)	Bracket, Sppt, Hose, Drain	1
26	12273	(0000–)	Screw, Hex, M8 X 1.25 X 20, Nl, Ss	10
27	09011	(0000–)	Screw, Hex, M8 X 1.25 X 30, Ss	4
28	08713	(0000–)	Nut, Hex, Lock, M8 X 1.25, Nl, Ss	4
29	379829	(0000–)	Washer, Flat, 0.34b 1.50d .12, Stl, Pl	1
30	09010	(0000–)	Screw, Hex, M8 X 1.25 X 25, Ss	2
31	1213110	(0000–)	Label, Hole, Cover, Recvy Tank	1

Fig. 24 – Tank Drains Group

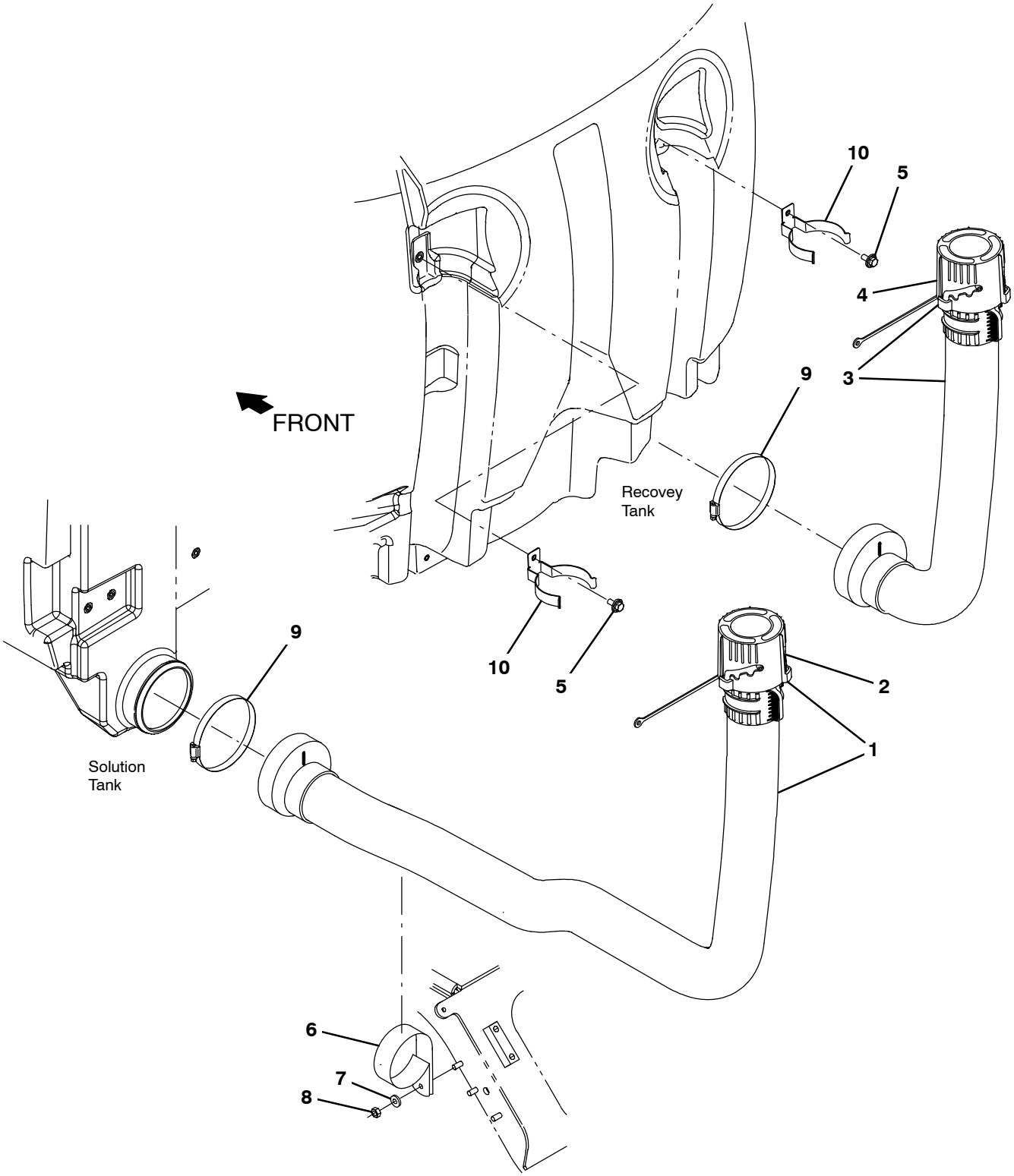

356427

Fig. 24 – Tank Drains Group

	Ref.	Part No.	Serial Number	Description	Qty.
▽	1	1206099	(0000–)	Hose Assy, Drain, 3.0 Id 64 L	1
▲	2	1214337	(0000–)	Cuff Assy, Outer, Drain Hose	1
▽	3	1206370	(0000–)	Hose Assy, Drain, 3.0 Id 35 L	1
▲	4	1214337	(0000–)	Cuff Assy, Outer, Drain Hose	1
	5	1020341	(0000–)	Screw, Hex, M8 X 1.25 X 20, Ss, Sems	2
	6	1207562	(0000–)	Clamp, Cable, Stl, 3.25d X 1.00w, 1hole	1
	7	01685	(0000–)	Washer, Flat, 0.38b 0.88d .08, Ss	1
	8	08713	(0000–)	Nut, Hex, Lock, M8 X 1.25, Nl, Ss	1
	9	1201434	(0000–)	Clamp, Hose, Wormdrive, 4.63–5.50, 0.5w	2
	10	1209684	(0000–)	Bracket, Mtg, Hose	2

Fig. 25 – Vacuum Fans and Rear Side Door Group

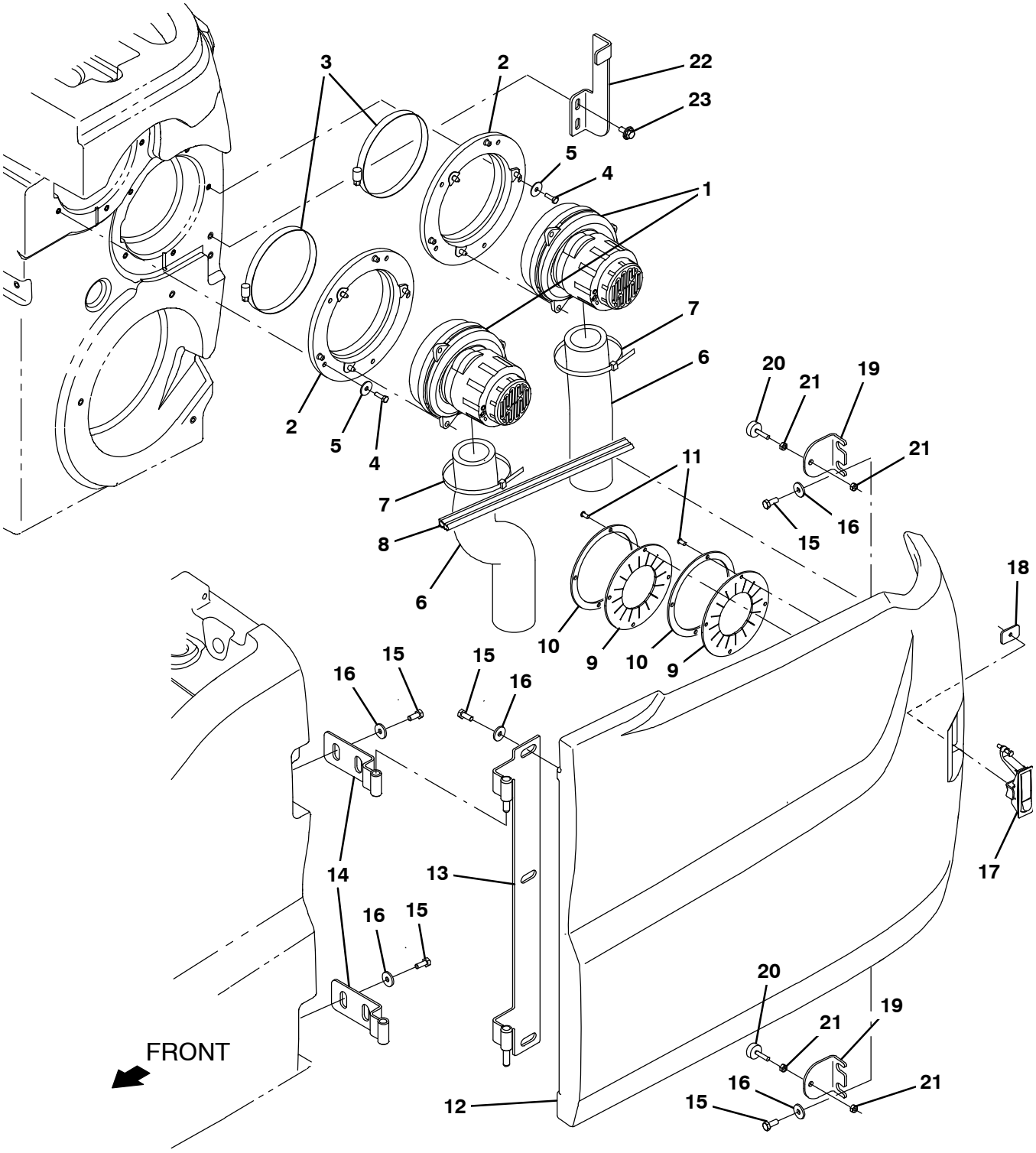

356428

Fig. 25 – Vacuum Fans and Rear Side Door Group

	Ref.	Part No.	Serial Number	Description	Qty.
▽	1	1200149	(0000–)	Fan, Vacuum, 6.6d, 036vdc, 1 Stage [Bpt]	2
▲		1206774	(0000–)	Brush Kit, Motor, Fan	1
	2	1201267	(0000–)	Assy, Seal, Mtg, Vacfan	2
	3	49891	(0000–)	Clamp, Hose, Wormdrive, 5.56–6.50d, .56w	2
	4	08716	(0000–)	Screw, Hex, M6 X 1.00 X 20, Ss	10
	5	29570	(0000–)	Washer, Flat, 0.28b 1.00d .06, Stl	10
	6	1203848	(0000–)	Muffler, Vacfan, 11.0 L	2
	7	130773	(0000–)	Tie, Cable, Nyl, 11.0l, .14w, 3.0 Max. D	2
	8	1066431	(0000–)	Seal, Afmkt, Bulb, Dual, 03ft [F/.30gap]	1
	9	1214173	(0000–)	Seal, Door, Vac Fan, Rbr	2
	10	1214174	(0000–)	Retainer, Seal, Door, Vac Fan	2
	11	382320	(0000–)	Screw, Pan, Phl, 12–16 X 0.50, F/ Plstc	8
	12	9020218	(0000–)	Cover, Side, Lh, Afmkt [T17]	1
	13	1205801	(0000–)	Hinge, Wldt, Lh	1
	14	1205811	(0000–)	Hinge Wldt, [T12]	2
	15	15675	(0000–)	Screw, Hex, M8 X 1.25 X 16, Ss	11
	16	32492	(0000–)	Washer, Flat, 0.38, Std	11
	17	398806	(0000–)	Latch	1
	18	1208748	(0000–)	Plate, Latch [T17]	1
	19	1207039	(0000–)	Bracket, Bumper	2
	20	20802	(0000–)	Bumper, Rbr, 1.0d 0.38th .25–20	2
	21	19312	(0000–)	Nut, Hex, Std, .25–20	4
	22	1207341	(0000–)	Bracket, Latch, Lh Panel [T17]	1
	23	1020341	(0000–)	Screw, Hex, M8 X 1.25 X 20, Ss, Sems	2

Fig. 26 – Rear Squeegee Lift Group

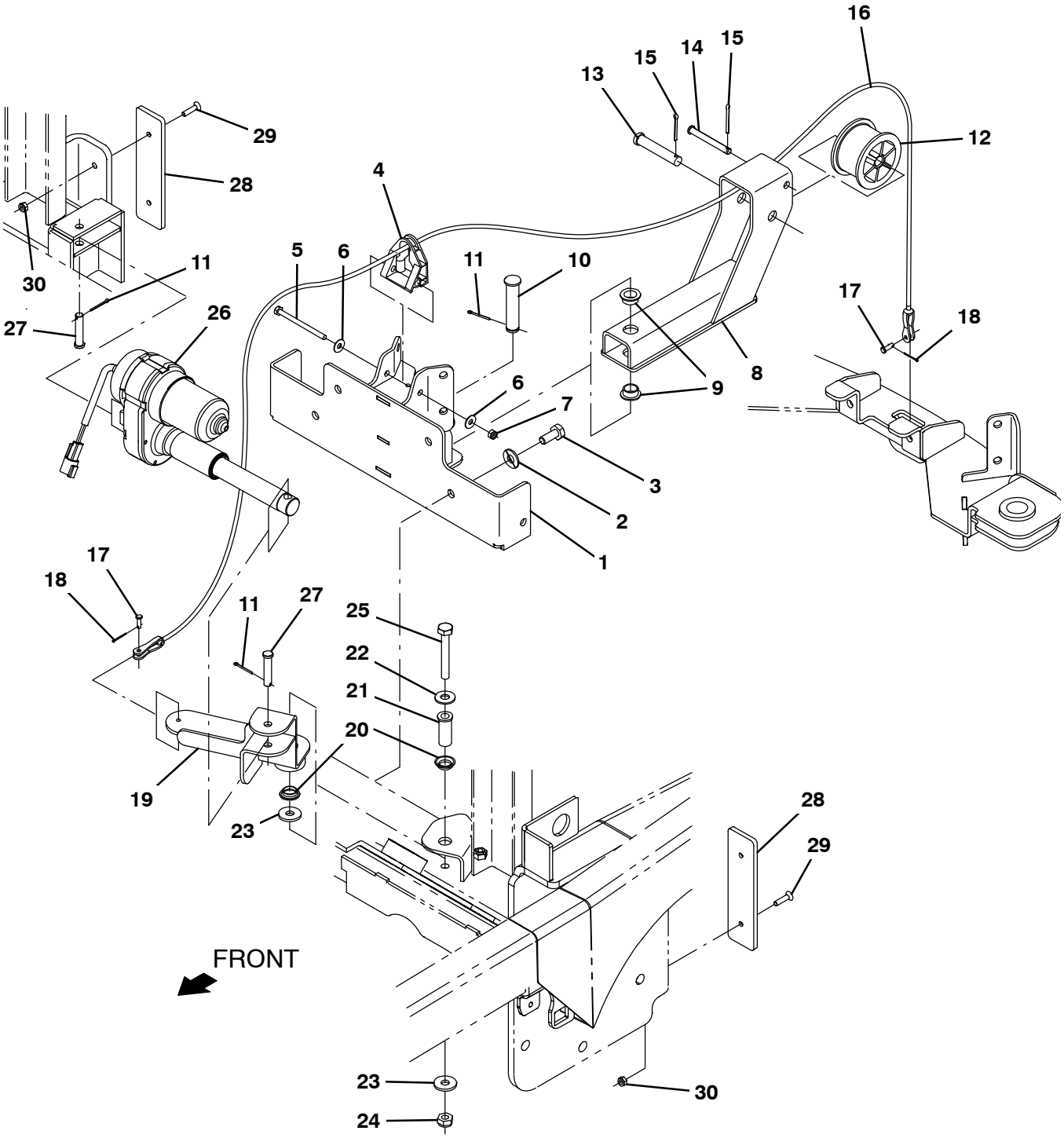

356429

Fig. 26 – Rear Squeegee Lift Group

Ref.	Part No.	Serial Number	Description	Qty.
1	1207903	(0000–)	Bracket Wldt, Sqge Lift, Frame	1
2	01686	(0000–)	Washer, Flat, 0.44b 1.00d .08, Ss	4
3	09770	(0000–)	Screw, Hex, M10 X 1.50 X 25, Nl, Ss	4
4	1208274	(0000–)	Guide, Cable, Sqge Lift	1
5	391434	(0000–)	Screw, Hex, M6 X 1.00 X 80, Ss	1
6	01684	(0000–)	Washer, Flat, 0.27b 0.69d .05, Ss	2
7	08712	(0000–)	Nut, Hex, Lock, M6 X 1.00, Nl, Ss	1
8	1205553	(0000–)	Lift Wldt, Sqge, Pulley	1
9	25735	(0000–)	Bushing, Flng, 0.63b 0.75d 0.38l	2
10	1018276	(0000–)	Pin, Clevis, 0.62d X 2.91l	1
11	08179	(0000–)	Pin, Cotter, .094 X 1.00	3
12	223054	(0000–)	Drum, Cable, Lift	1
13	51103	(0000–)	Pin, Clevis, 0.50d X 2.62l	1
14	71274	(0000–)	Pin, Clevis, 0.31d X 2.62l	1
15	08175	(0000–)	Pin, Cotter, .125 X 1.25	2
16	1207739	(0000–)	Cable, Ss .12d 22.6l .2clevis / .2clevis	1
17	77488	(0000–)	Pin, Clevis, 0.19d X 0.63l	2
18	08178	(0000–)	Pin, Cotter, .062 X 0.75	2
19	1207466	(0000–)	Lever Wldt, Sqge Lift, Pulley	1
20	04843	(0000–)	Bushing, Flng, 0.63b 0.72d 0.25l	2
21	1208247	(0000–)	Bushing,Sleeve,Flng0.40b 0.625d 1.62l,Ss	1
22	01686	(0000–)	Washer, Flat, 0.44b 1.00d .08, Ss	1
23	1014563	(0000–)	Washer, Flat, 0.40b 1.12d .12, Ss	2
24	08714	(0000–)	Nut, Hex, Lock, M10 X 1.5, Nl, Ss	1
25	14529	(0000–)	Screw, Hex, M10 X 1.50 X 70, Ss	1
26	1206872	(0000–)	Actuator, 36v, 2.36in Stroke	1
27	17461	(0000–)	Pin, Clevis, 0.37d X 1.75l	2
28	1207757	(0000–)	Shield, Bumper, Sqge Cplg	2
29	06415	(0000–)	Screw, Flt, Soc, M6 X 1.00 X 25, 10.9	4
30	08708	(0000–)	Nut, Hex, Lock, M6 X 1.00, Nl	4

Fig. 27 – Rear Squeegee Linkage Group

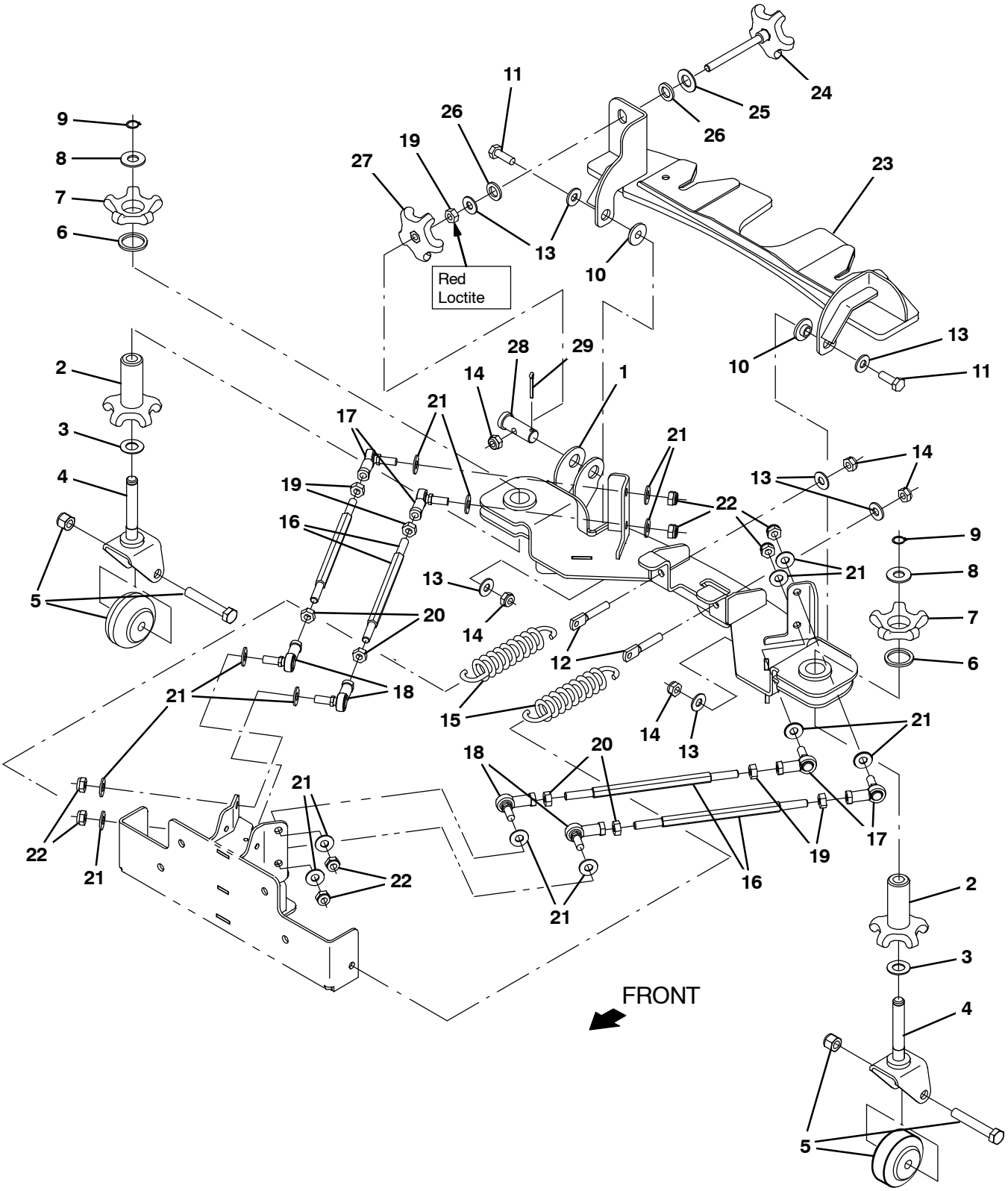

356430

Fig. 27 – Rear Squeegee Linkage Group

	Ref.	Part No.	Serial Number	Description	Qty.
	1	1206821	(0000–)	Coupling Wldt, Sqge, Front	1
▽		9020233	(0000–)	Caster, Assy, Sq, Rear, Afmkt [T17]	2
▲	2	1208155	(0000–)	Knob, Adj, Caster	1
▲	3	07450	(0000–)	Washer, Thrust, 0.66b 1.25d 0.06w	1
▲	4	1208153	(0000–)	Pivot Wldt, Caster, Sqge	1
▲	5	9014285	(0000–)	Caster kit, Rear Squeegee, Am	1
▲	6	79217	(0000–)	Washer, Wavy, 1.20b 1.54d .13	1
▲	7	1208156	(0000–)	Knob, Caster	1
	8	77272	(0000–)	Washer, Flat, 0.60b 1.31d .10, Ss	2
	9	01516	(0000–)	Ring, Retaining, Ext, 0.59d, Basic	2
	10	363087	(0000–)	Bushing, Flng, 0.44b 1.25d 0.25l	2
	11	12317	(0000–)	Screw, Hex, M10 X 1.50 X 30, Ss	2
	12	386847	(0000–)	Bolt, Eye, M10 X 1.50 X 064mm, 07.10 Eye	2
	13	01686	(0000–)	Washer, Flat, 0.44b 1.00d .08, Ss	7
	14	08714	(0000–)	Nut, Hex, Lock, M10 X 1.5, Nl, Ss	5
	15	1031413	(0000–)	Spring, Extn, 1.68od 0.20wir 07.5l	2
▽		9020232	(0000–)	Link Kit, Sq, Rear, 1 Link, Afmkt [T17]	4
▲	16	1209712	(0000–)	Rod, Hex, M10, 09.50l, Stl	1
▲	17	05686	(0000–)	Rod–End, M10 X 1.5rh Fem M10 X 1.5stud	1
▲	18	05685	(0000–)	Rod–End, M10 X 1.5lh Fem M10 X 1.5stud	1
▲	19	07787	(0000–)	Nut, Hex, Std, M10 X 1.50, Ss	1
▲	20	09775	(0000–)	Nut, Hex, Std, M10–1.5 , Ss	1
▲	21	01686	(0000–)	Washer, Flat, 0.44b 1.00d .08, Ss	4
▲	22	08714	(0000–)	Nut, Hex, Lock, M10 X 1.5, Nl, Ss	2
	23	1206844	(0000–)	Coupling Wldt, Sqge, Rear	1
	24	1206865	(0000–)	Knob, Star, 3.21d 5ear 4.45l M10x1.5	1
	25	15331	(0000–)	Washer, Flat, 0.62, Sae	1
	26	1210022	(0000–)	Washer, 1.02 Od, .62 Id, Urethane	2
	27	1054945	(0000–)	Knob, Star, 3.21d 5ear M10	1
	28	1207034	(0000–)	Pin, Clevis, 0.75d X 2.00l, M10 Hole	1
	29	08236	(0000–)	Pin, Cotter, .156 X 1.25	1

Fig. 28 – Rear Squeegee Group

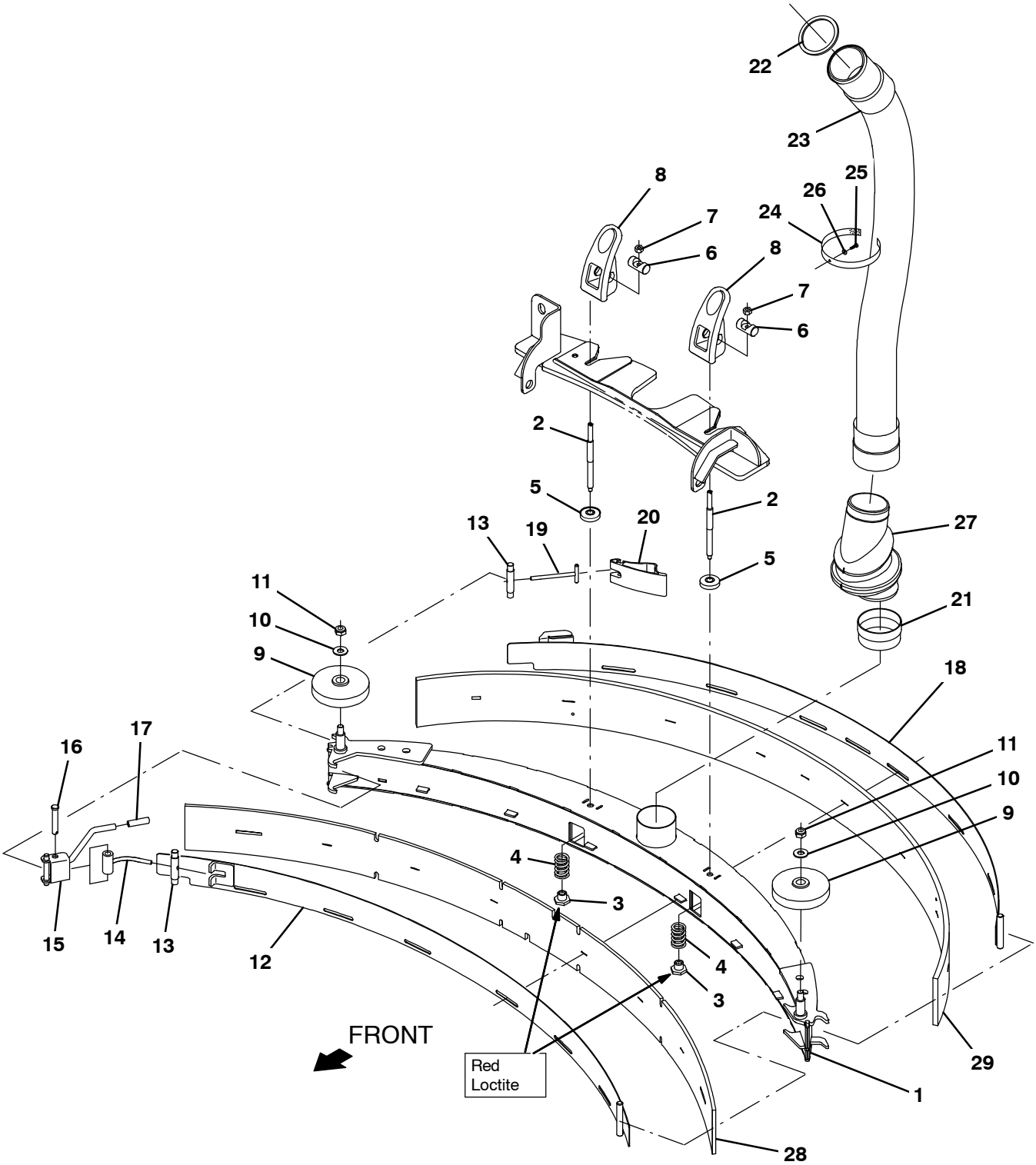

356432

Fig. 28 – Rear Squeegee Group

	Ref.	Part No.	Serial Number	Description	Qty.
▽		9020070	(0000–)	Squeegee Kit, Ci [T17]	1
▲	1	1213530	(0000–)	Squeegee Frame Assy	1
▲	2	1206251	(0000–)	Rod, Thrd, 2end, M8x1.25/ M10x1.5 –02	2
▲	3	391345	(0000–)	Nut, T, M10 X 1.50 X 0.62od X 0.5l	2
▲	4	1212782	(0000–)	Spring, Cmpr, 0.98od .14wir 02.00l, Ss	2
▲	5	1208629	(0000–)	Ring, Mtg, Sqge, .38l	2
▲	6	1055396	(0000–)	Pin, 0.63d, 02.0l [W/Cbore, M8 Screw]	2
▲	7	07786	(0000–)	Nut, Hex, Std, M8 X 1.25, Ss	2
▲	8	1052532	(0000–)	Grip, Lock	2
▲	9	363162	(0000–)	Wheel, 04.0d 0.89w 0.64b	2
▲	10	01686	(0000–)	Washer, Flat, 0.44b 1.00d .08, Ss	2
▲	11	08714	(0000–)	Nut, Hex, Lock, M10 X 1.5, Nl, Ss	2
▲	12	1209122	(0000–)	Strap Wldt	1
▲	13	1206530	(0000–)	Pin, 0.43d 2.75l [303ss]	2
▲	14	1209121	(0000–)	Arm Wldt	1
▲	15	1209120	(0000–)	Bracket Wldt	1
▲	16	51813	(0000–)	Pin, Clevis, 0.37d X 2.12l	1
▲	17	1208858	(0000–)	Cover, Handle	1
▲	18	1207103	(0000–)	Clamp Wldt, Rear	1
▲	19	21606	(0000–)	Bar Wldt, Retainer, Sqge, Rear	1
▲	20	1208906	(0000–)	Cam, Rear	1
	21	1208730	(0000–)	Cuff, Adapter, 2.75 X 3.00, Pvc	1
	22	1207608	(0000–)	Gasket, Ure, .16, 3.23id 3.63od	1
	23	1207661	(0000–)	Hose Assy, Rear Squeegee	1
	24	1209444	(0000–)	Fastener, 11.00l [Hook & Loop]	1
	25	1045525	(0000–)	Screw, Pan, Phl, M6 X 1.00 X 12, Blk	1
	26	01684	(0000–)	Washer, Flat, 0.27b 0.69d .05, Ss	1
	27	1213539	(0000–)	Hose Trap Assy	1
	28	1207086	(0000–)	Blade, Front Squeegee 56.6l (Linard)	1
	29	1207087	(0000–)	Blade, Rear Squeegee 56.6l (Linatex)	1
	28	1208356	(0000–)	Blade, Front Squeegee 56.6l (Urethane)	1
	29	1208357	(0000–)	Blade, Rear Squeegee 60.6l (Urethane)	1
	28	1208358	(0000–)	Blade, Front Squeegee 60.6l (Gum)	1
	29	1208359	(0000–)	Blade, Rear Squeegee 60.6l (Gum)	1

Fig. 29 – Right Hand Door and Battery Cover Group

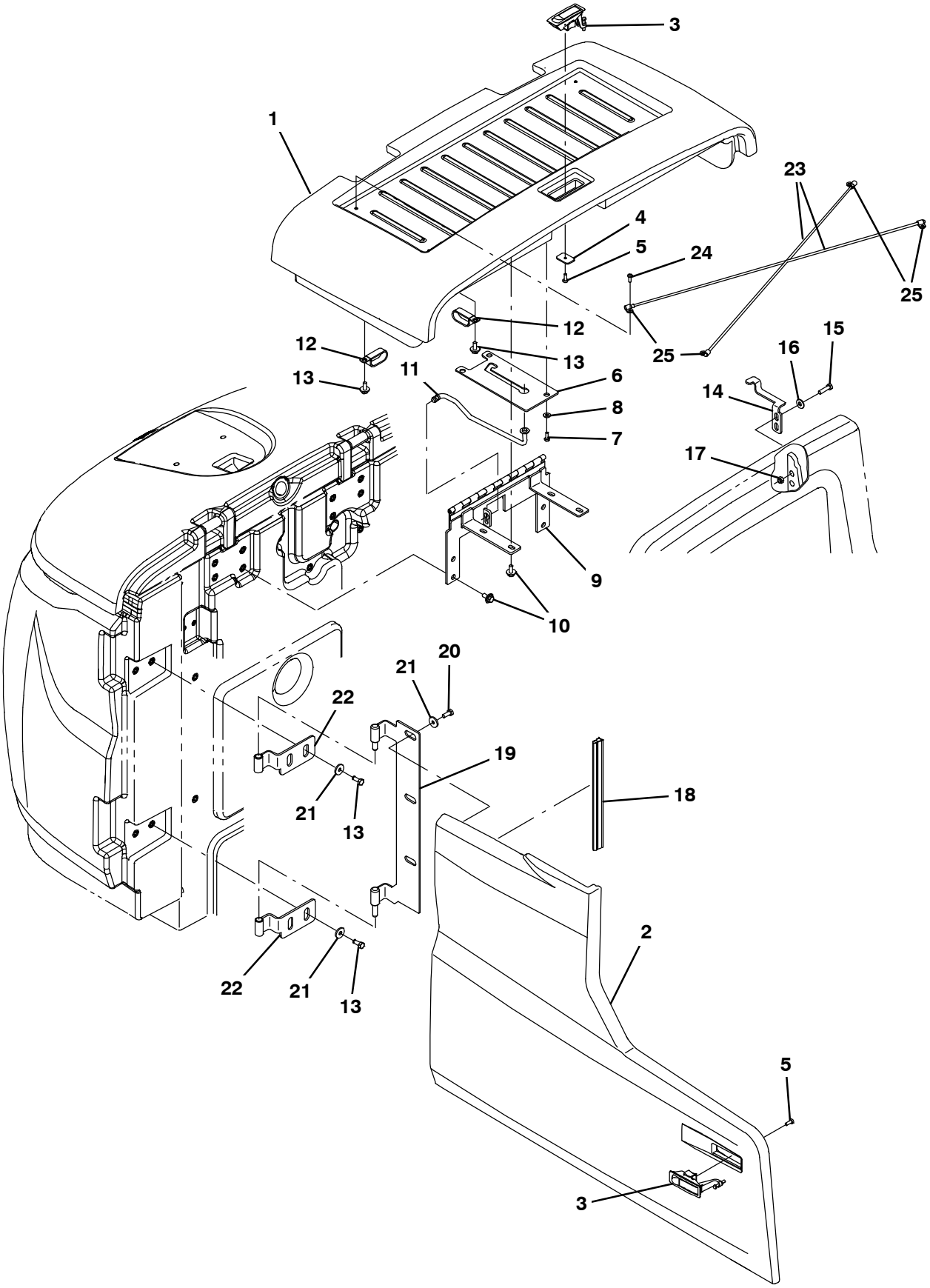

356433 – CE

Fig. 29 – Right Hand Door and Battery Cover Group

Ref.	Part No.	Serial Number	Description	Qty.
1	9020289	(0000–)	Cover Assy, Battery, Ce [T17]	1
2	9020214	(0000–)	Cover, Side Rh, Afmkt [T17]	1
3	398806	(0000–)	Latch	2
4	1208748	(0000–)	Plate, Latch [T17]	1
5	06934	(0000–)	Screw, Pan, Phl, M5 X 0.80 X 20, 4.8	2
6	1209190	(0000–)	Plate, Prop Rod, [T17]	1
7	15678	(0000–)	Screw, Hex, M6 X 1.00 X 16, Ss	3
8	32490	(0000–)	Washer, Flat, 0.25, Std	3
9	1207362	(0000–)	Hinge Wldt, Cover, Battery [T17]	1
10	1020341	(0000–)	Screw, Hex, M8 X 1.25 X 20, Ss, Sems	8
11	1207145	(0000–)	Rod Wldt, Seat, Battery Cover [T17]	1
12	09570	(0000–)	Clamp, Cable, Stl, 0.90d X 0.62w, 1hole	3
13	09740	(0000–)	Screw, Hex, M8 X 1.25 X 20, Ss	7
14	1207131	(0000–)	Bracket, Latch [T17]	1
15	76570	(0000–)	Screw, Hex, M8 X 1.25 X 30, 8.8	2
16	32491	(0000–)	Washer, Flat, 0.31, Std	4
17	08709	(0000–)	Nut, Hex, Lock, M8 X 1.25, Nl	2
18	1066429	(0000–)	Seal, Afmkt, Bulb, Dual, 01ft [F/.30gap]	1
19	1207946	(0000–)	Hinge Wldt, Rh [T17]	1
20	49826	(0000–)	Screw, Hex, M8 X 1.25 X 16, Nl, Ss	3
21	1017218	(0000–)	Washer, Flat, 0.32b 1.00d .12, Ss	7
22	1205811	(0000–)	Hinge Wldt, [T12]	2
23	1210971	(0000–)	Cord, Battery Cover [T17]	2
24	39239	(0000–)	Screw, Pan, Phl, 10–32 X 0.50, G2, Blk	4
25	140324	(0000–)	Clamp, Cable, Nyl, 0.31d, Blk	4

Fig. 30 – Electrical Box Group

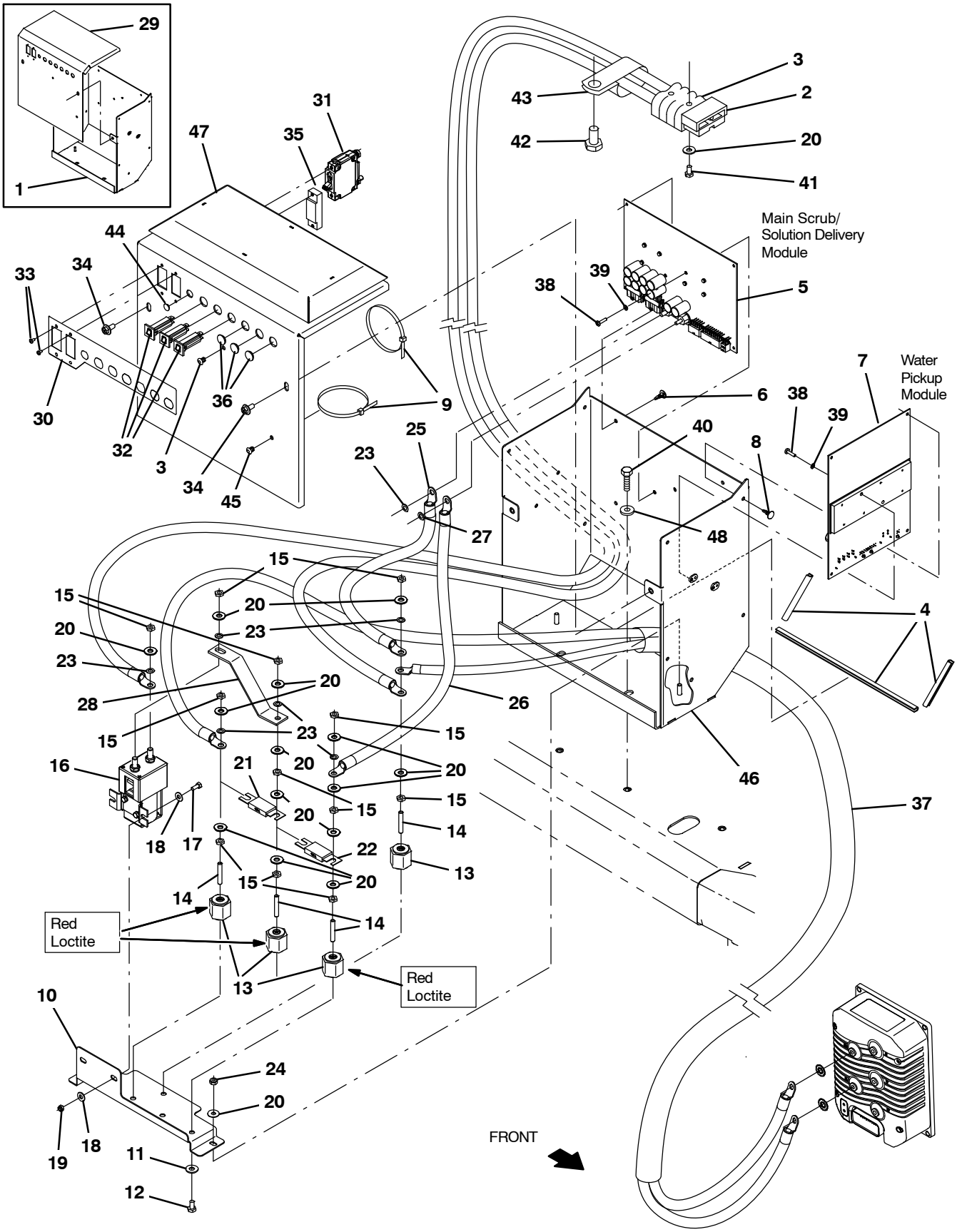

356431

Fig. 30 – Electrical Box Group

	Ref.	Part No.	Serial Number	Description	Qty.
	1	1210467	(0000–0295)	Panel Wldt, Enclosure, Electrical	1
▽	2	1072981	(0000–)	Cable, Battery, 1/0ga [M8 Ring/M6 Ring]	1
▲	3	01726	(0000–)	Connector, 350A, Gray	1
	4	1050827	(0000–)	Molding, Afmkt, Trim, Pvc, .00 .06, 03ft	1
▽	5	9020228	(0000–0399)	Circuit Board Kit, Scrub, Afmkt [T17]	1
▲	6	1210399	(0000–0399)	Stand–Off, Circuitboard [0.25”]	4
▽	5	9015002	(0400–)	Circuit Board Kit, Scrub, Afmkt [T17/M17]	1
▲	6	1210399	(0400–)	Stand–Off, Circuitboard [0.25”]	4
▽	7	9020229	(0000–)	Circuit Board Kit, Water, Afmkt [t17]	1
▲	8	1210399	(0000–)	Stand–Off, Circuitboard [0.25”]	4
	9	763114	(0000–)	Tie, Cable, 11.3l, 2.75d Max	6
	10	1206431	(0000–)	Bracket, Mtg, Contactor	1
	11	32483	(0000–)	Washer, Flat, 0.25, Sae	4
	12	19314	(0000–)	Screw, Hex, .25–20 X 0.38, G5	4
	13	76062	(0000–)	Stand–Off, Wir, 0.25, Insulator, Panel	4
	14	41702	(0000–)	Rod, Thrd, Full, .25–20 01.5l	4
	15	19312	(0000–)	Nut, Hex, Std, .25–20	4
	16	1068510	(0000–)	Contactor, 36vdc, 200a, Spst	1
	17	09738	(0000–)	Screw, Hex, M5 X 0.80 X 12, Ss	2
	18	01683	(0000–)	Washer, Flat, 10, Ss	4
	19	09739	(0000–)	Nut, Hex, Lock, M5 X 0.80, Nl, Ss	2
	20	32483	(0000–)	Washer, Flat, 0.25, Sae	7
	21	386807	(0000–)	Fuse, 150a, 0.88 2.4l [Slo–Blo]	1
	22	86379	(0000–)	Fuse, 100a, 0.88 2.4l, 125volt	1
	23	07515	(0000–)	Washer, Lock, Int, 0.25, Ss	6
	24	08708	(0000–)	Nut, Hex, Lock, M6 X 1.00, Nl	2
	25	1072979	(0000–)	Cable, 04ga 6.9l Blk [M6 Ring/M6 Ring]	1
	26	1072978	(0000–)	Cable, 04ga 9.8l Blu [M5 Ring/M6 Ring]	1
	27	07514	(0000–)	Washer, Lock, Int, 10, Ss	2
	28	1208691	(0000–)	Busbar, 200a	1
	29	1209041	(0000–0295)	Cover, Enclosure, Electrical	1
	30	1208412	(0000–)	Label, Circuit Breaker	1
	31	1210970	(0000–)	Circuitbreaker, 60.0a, Resetable	1
	32	1064184	(0000–)	Circuitbreaker, 02.5a, Resetable	3
	33	06919	(0000–)	Screw, Pan, Phl, M3 X 0.50 X 6, 4.8	4
	34	1040467	(0000–)	Screw, Hex, m6 X 1.00 X 20, 9.8, Sems	2
	35	1213059	(0000–)	Plug, Circuit Breaker [Carling, 50/60a]	1
	36	1058340	(0000–)	Plug, Hole, Rnd, 0.63h 0.1l, Blk	3
	37	1072980	(0000–0399)	Cable Assy, 2ga, Power [T17]	1
	37	1074713	(0400–)	Cable Assy, 02ga, Power [T18, 2 Cond.]	1
	38	06926	(0000–)	Screw, Pan, Phl, M4 X 0.70 X 10, 4.8	4
	39	1202860	(0000–)	Washer, Flat, 0.17b 0.31d .03, Nyl	4
	40	09010	(0000–)	Screw, Hex, M8 X 1.25 X 25, Ss	2

Fig. 30 – Electrical Box Group

Ref.	Part No.	Serial Number	Description	Qty.
41	33930	(0000–)	Screw, Hex, M6 X 1.00 X 40, Ss	2
42	09740	(0000–)	Screw, Hex, M8 X 1.25 X 20, Ss	3
43	09570	(0000–)	Clamp, Cable, Stl, 0.90D X 0.62W, 1 Hole	3
44	33807	(0000–)	Plug, Holde, Rnd, 0.44H .03–.12, Blk Nyl	1
45	1202868	(0000–)	Clip, Tie, 0.25d, Plstc	8
46	1214566	(0296–)	Panel Wldt, Enclosure, Electrical	1
47	1214550	(0296–)	Cover Wldt, Enclosure, Electrical	1
48	1017218	(0000–)	Washer, Flat, 0.32 1.00D .12, Ss	2

Fig. 31 – Electrical Schematic Group (0000–0399)

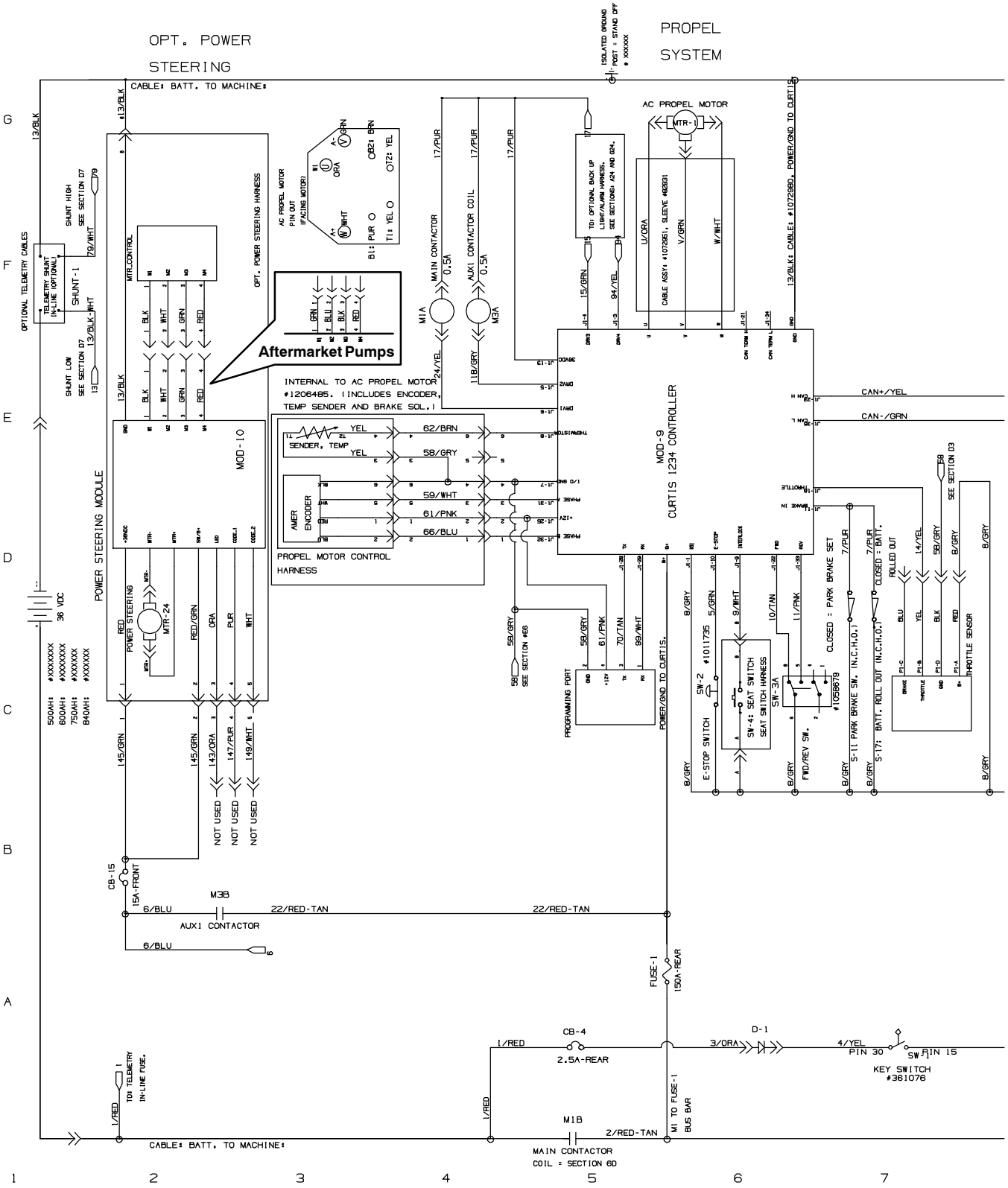

Fig. 31 – Electrical Schematic Group (0000–0399)

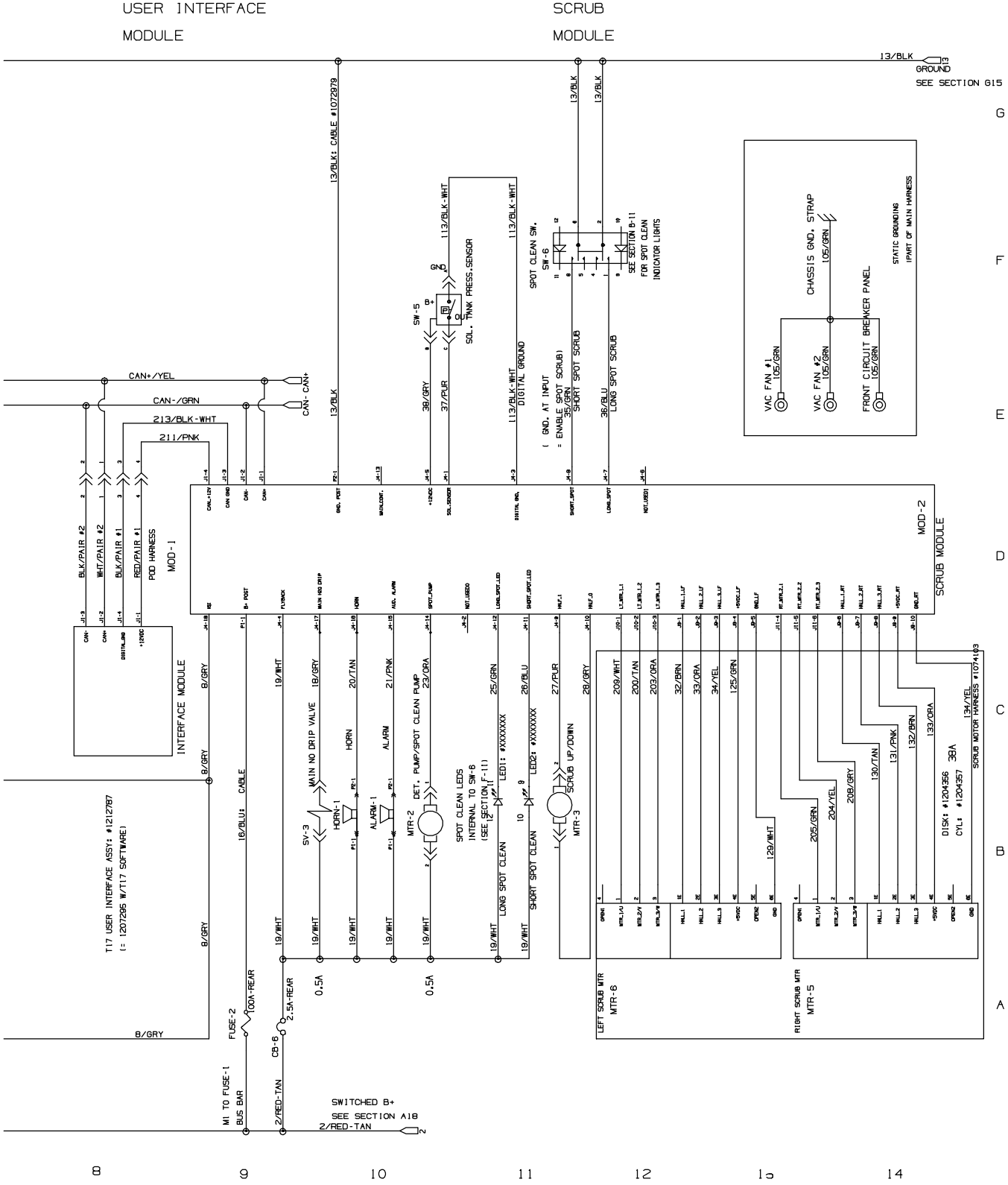

356516 – 1074089

Fig. 31 – Electrical Schematic Group (0000–0399)

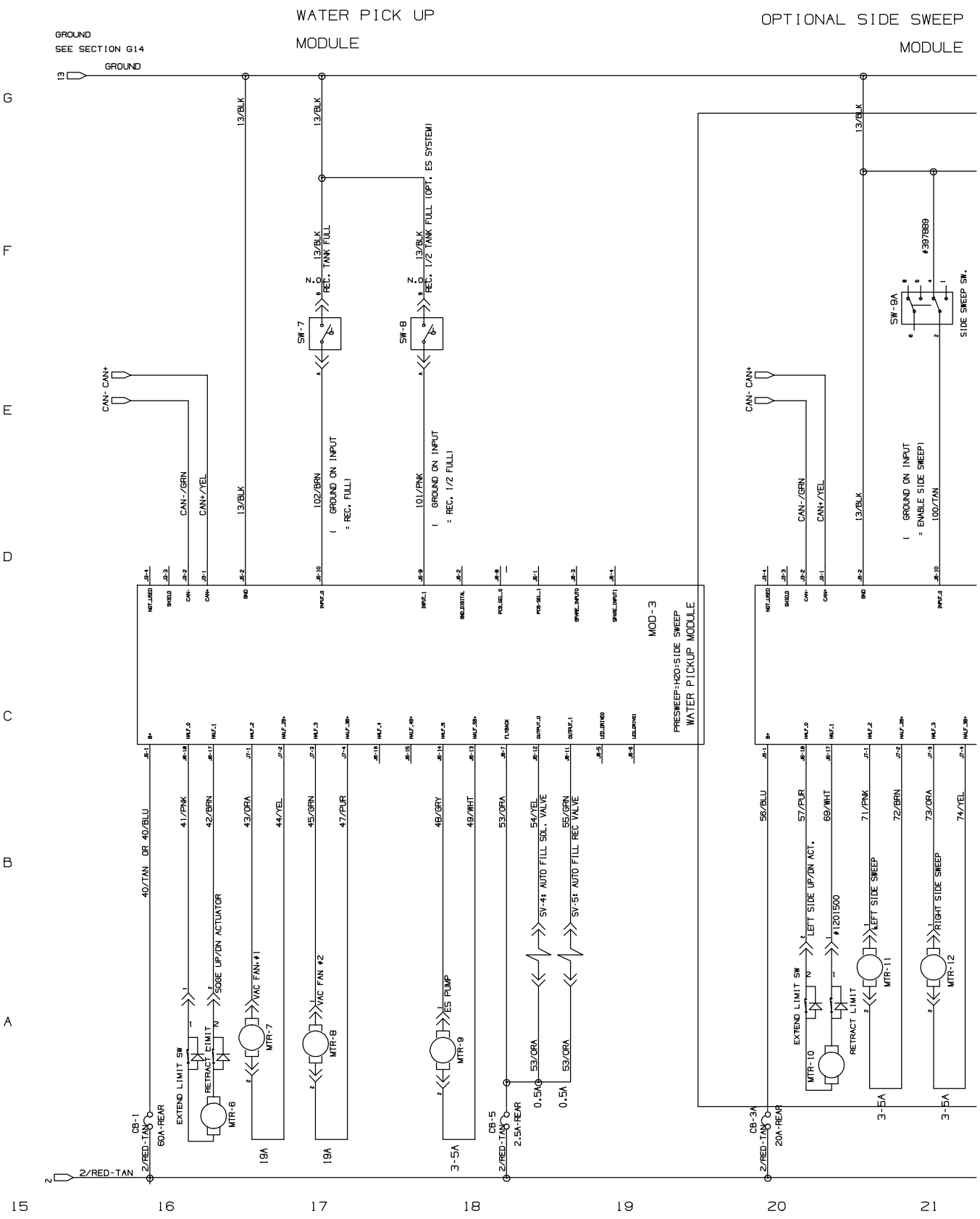

356516 – 1074089

Fig. 31 – Electrical Schematic Group (0000–0399)

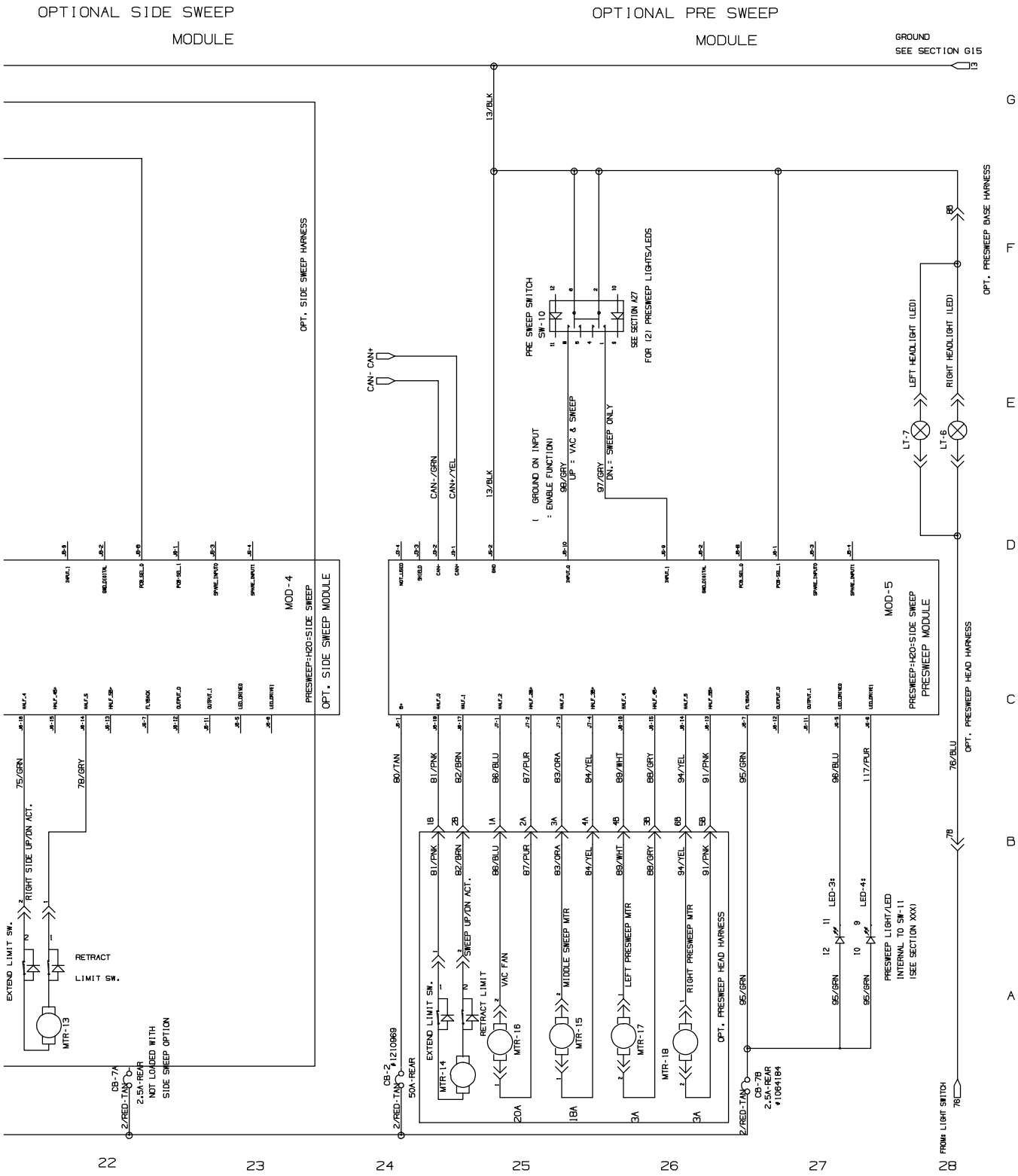

356516 – 1074089

Fig. 31 – Electrical Schematic Group (0000–0399)

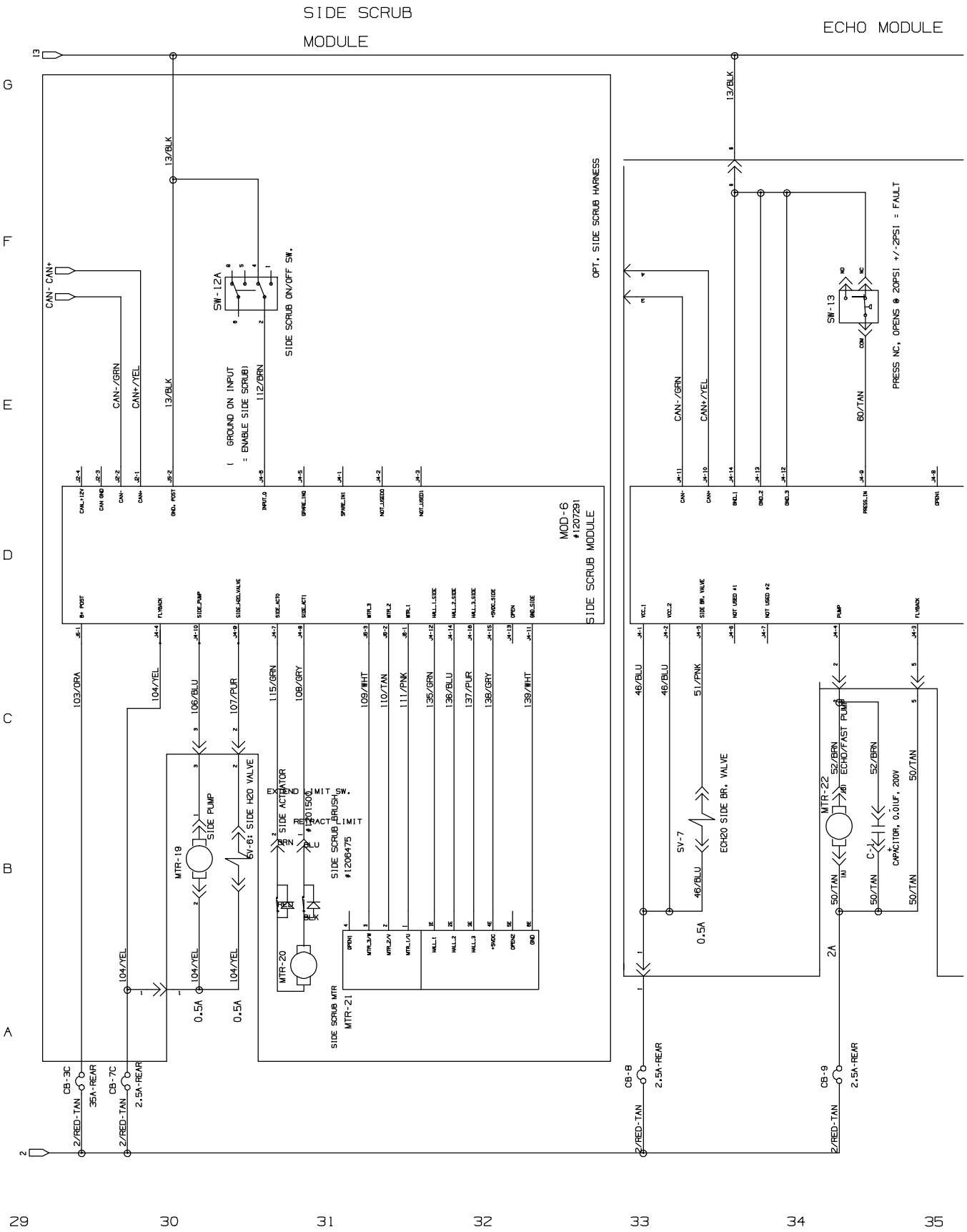

356516 – 1074089

Fig. 31 – Electrical Schematic Group (0000–0399)

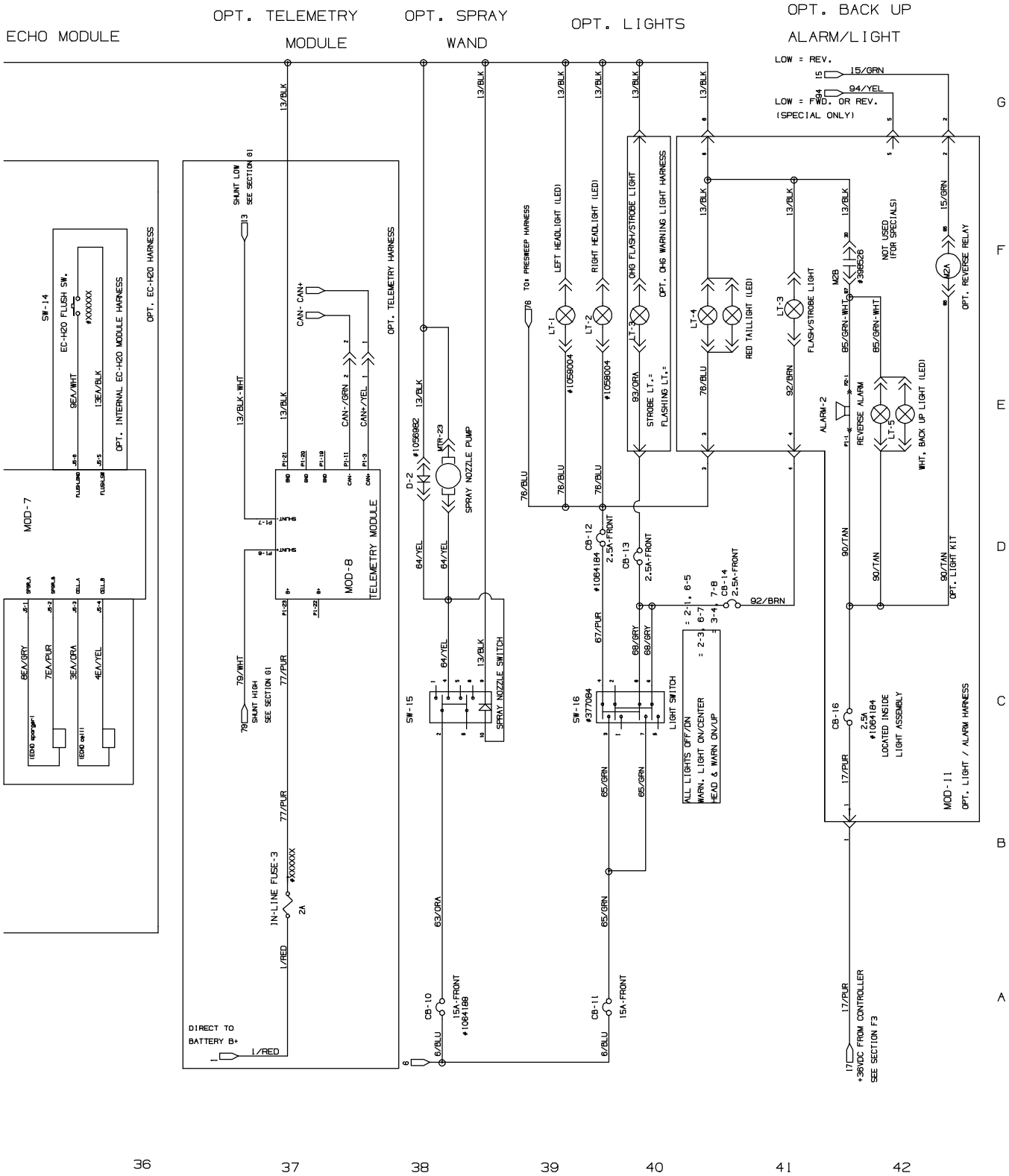

356516 – 1074089

Fig. 32 – Electrical Schematic (0400–)

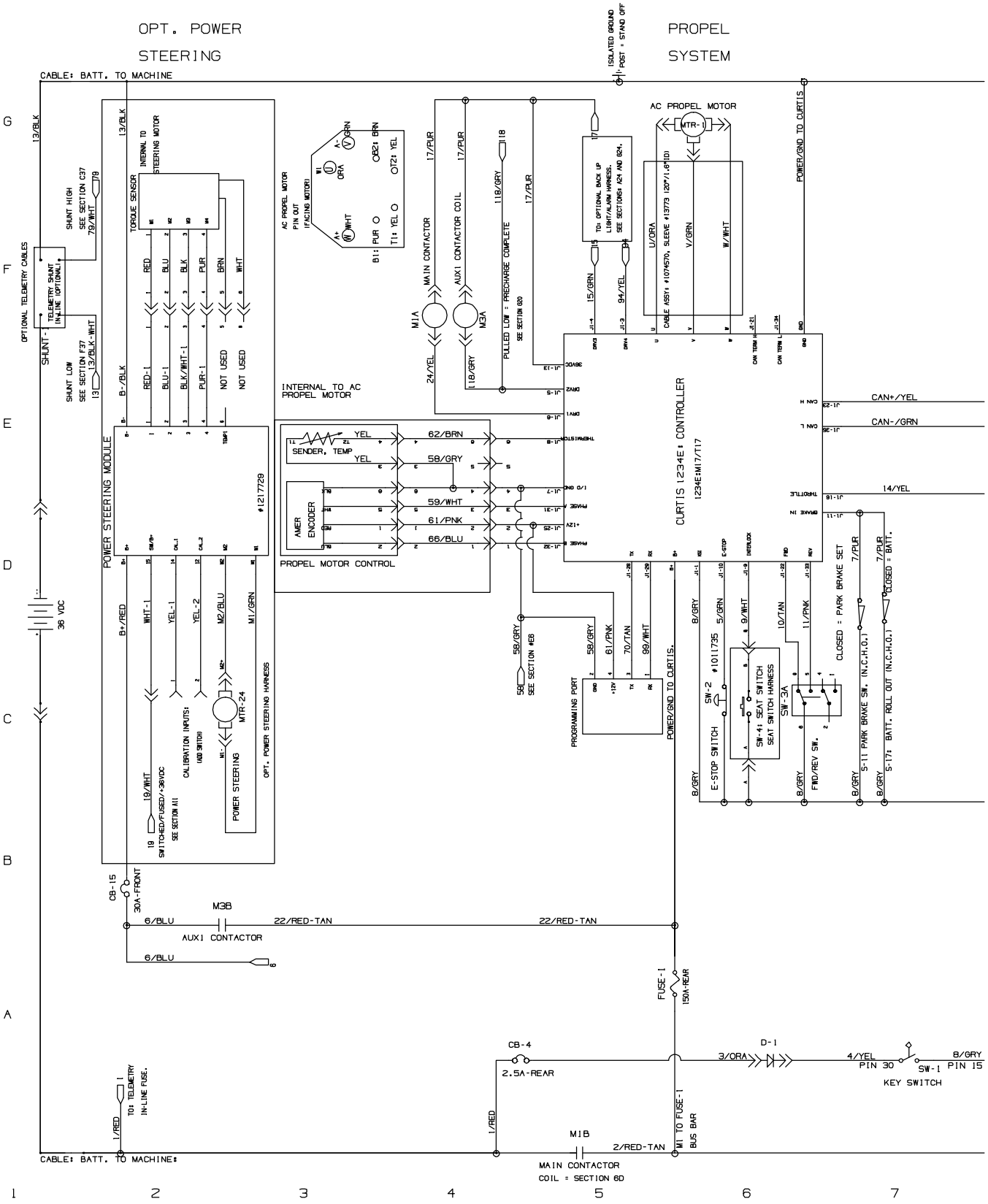

356516 – 1074089

Fig. 32 – Electrical Schematic (0400–)

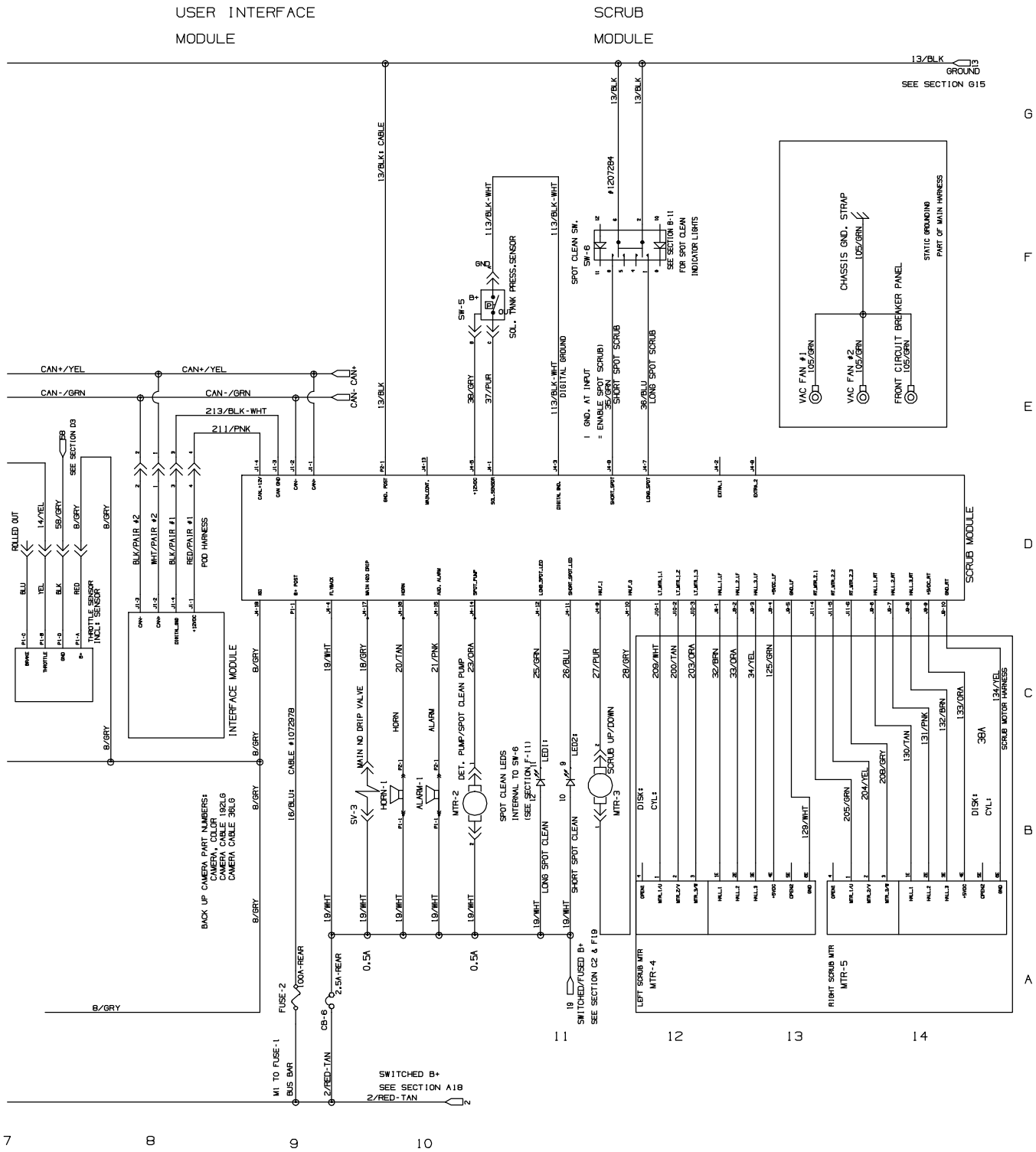

356516 – 1074089

Fig. 32 – Electrical Schematic (0400–)

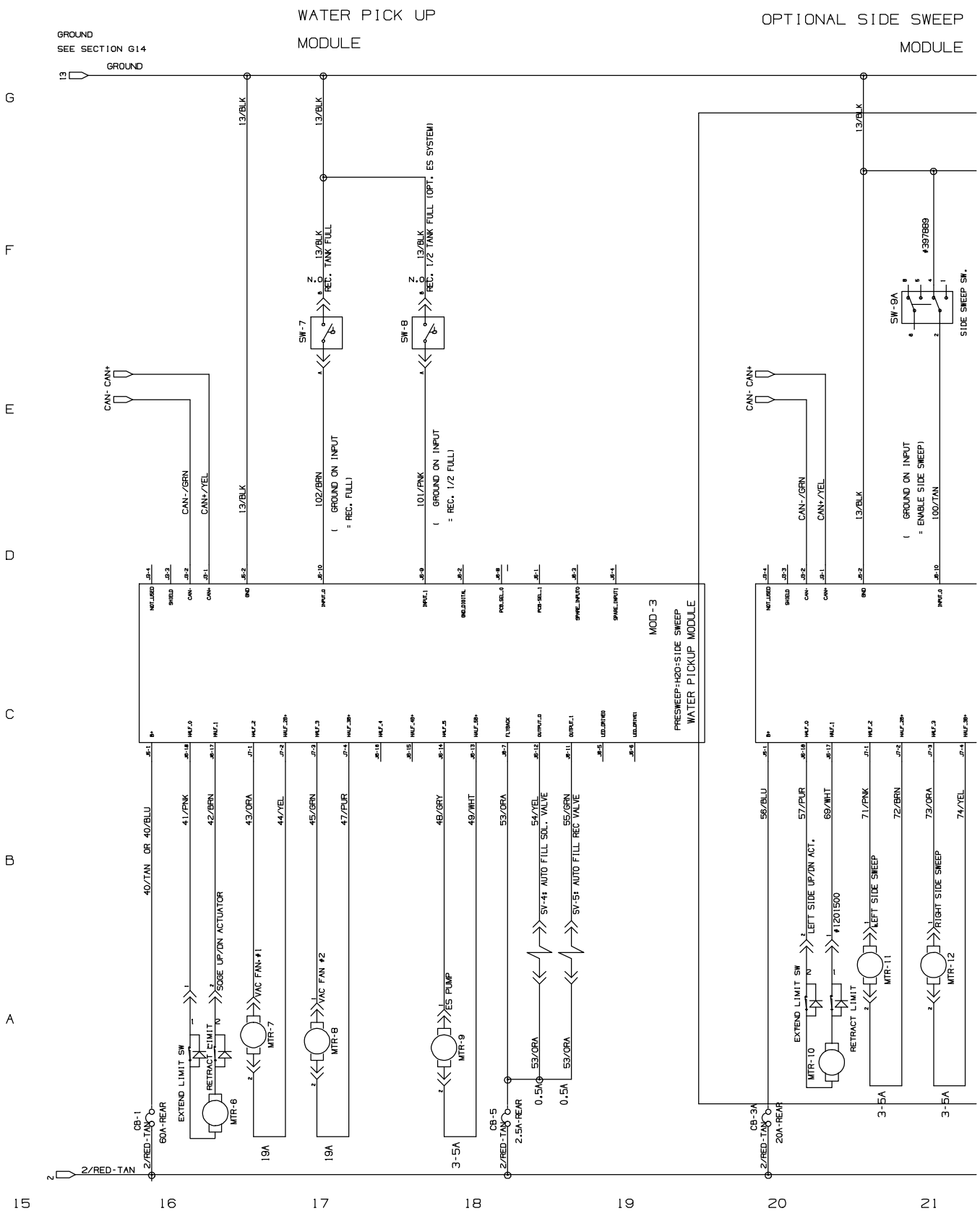

356516 – 1074089

Fig. 32 – Electrical Schematic (0400–)

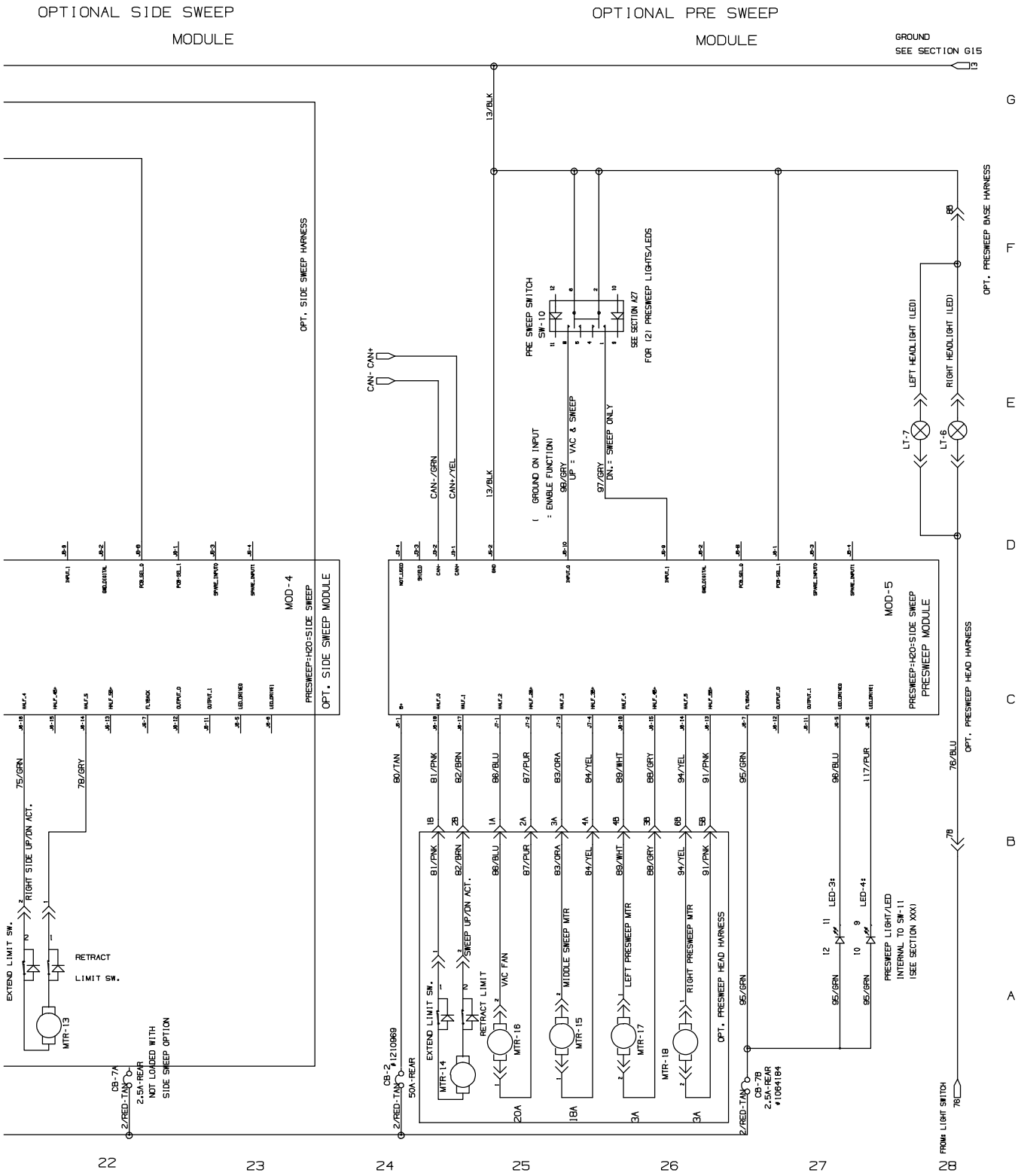

356516 – 1074089

Fig. 32 – Electrical Schematic (0400–)

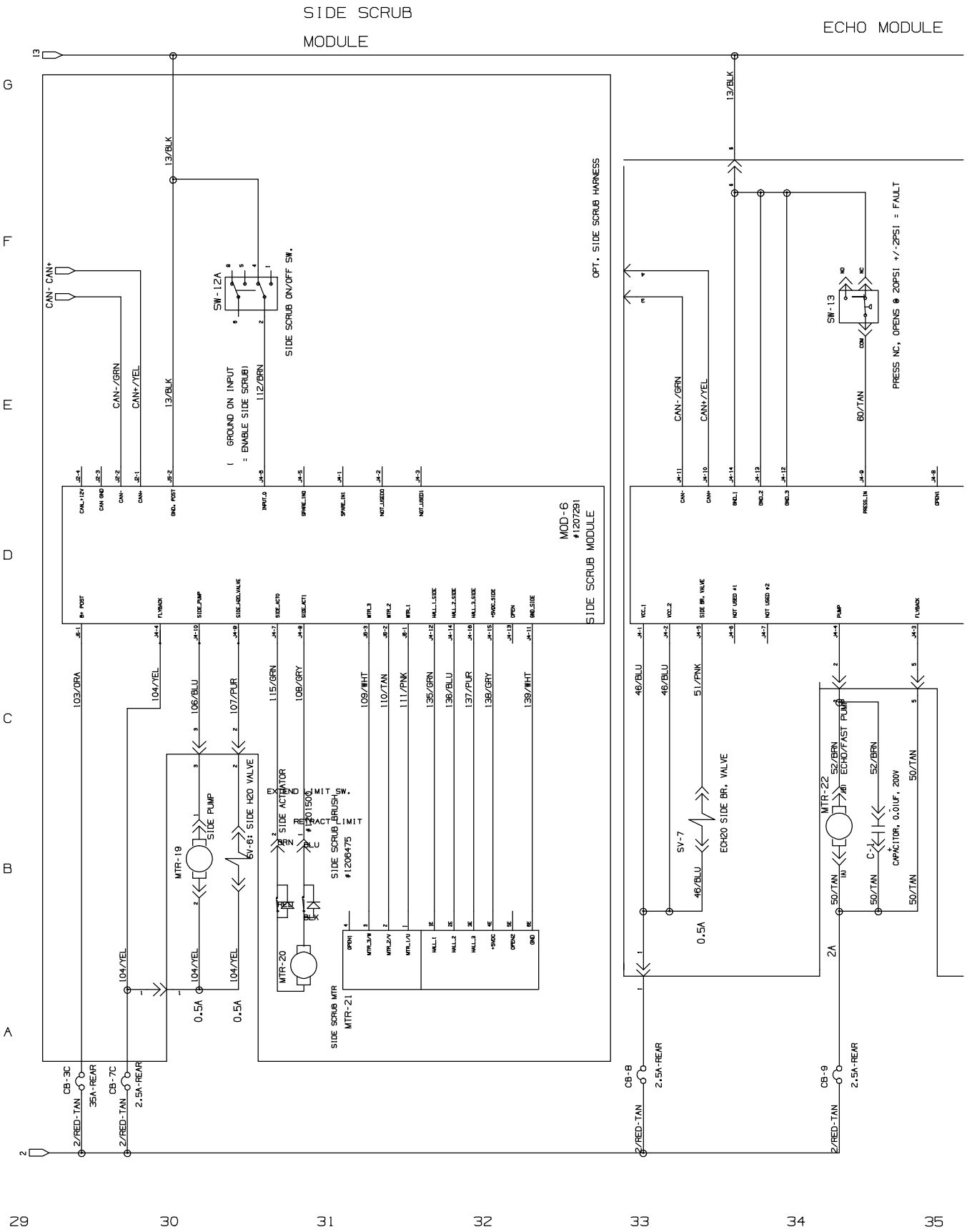

356516 – 1074089

Fig. 32 – Electrical Schematic (0400–)

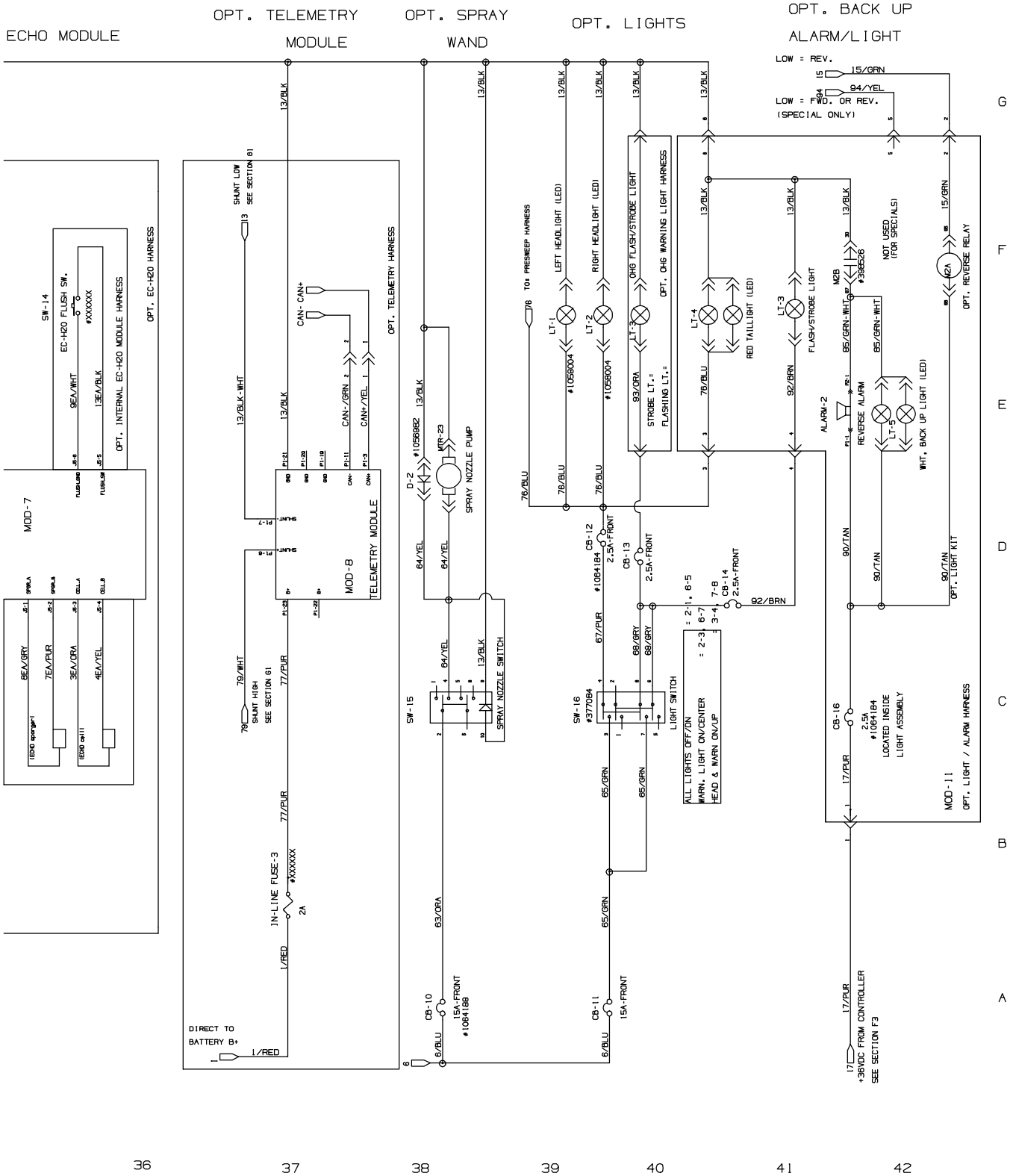

356516 – 1074089

Fig. 33 – Wire Harnesses Group

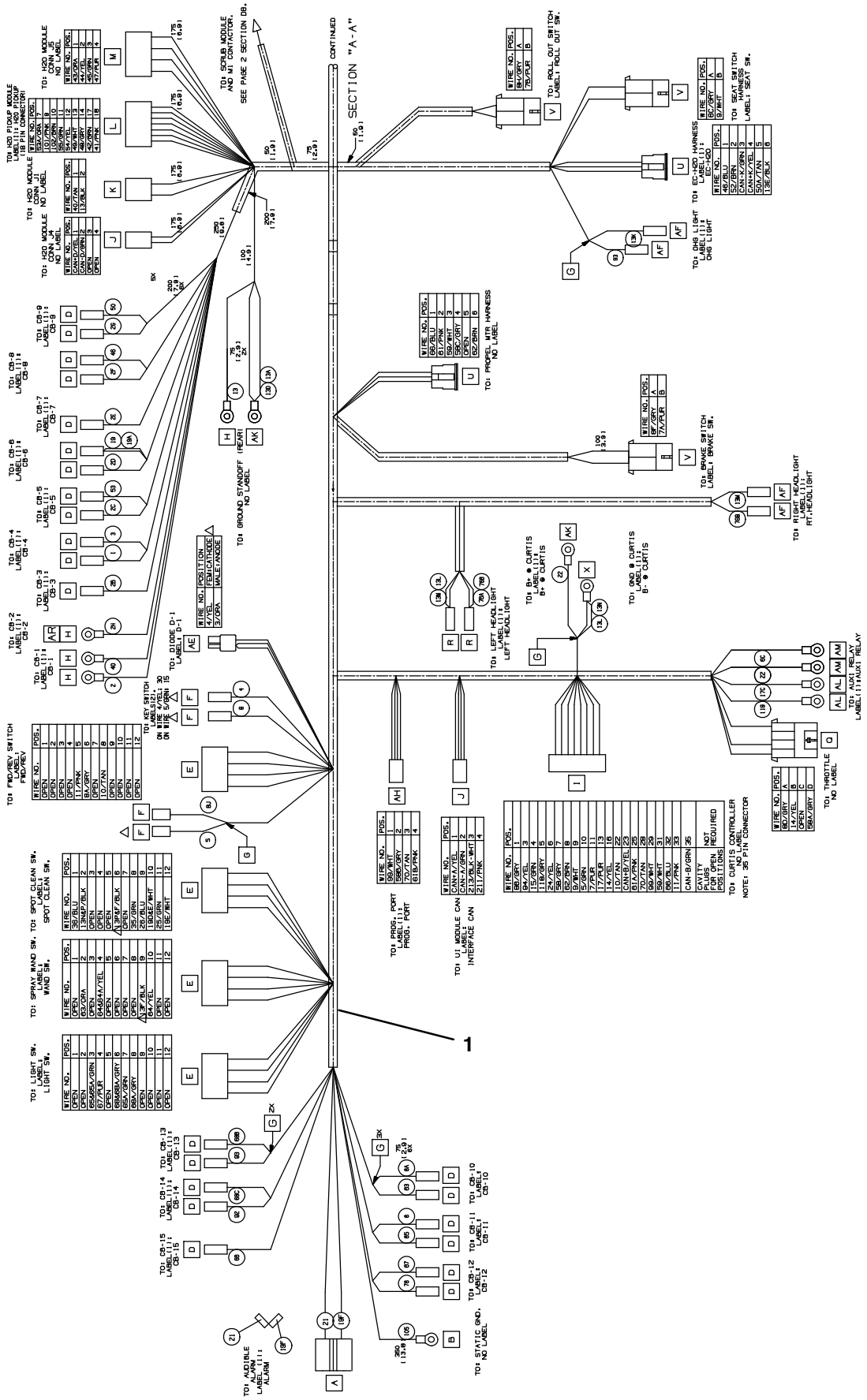

Fig. 33 – Wire Harnesses Group

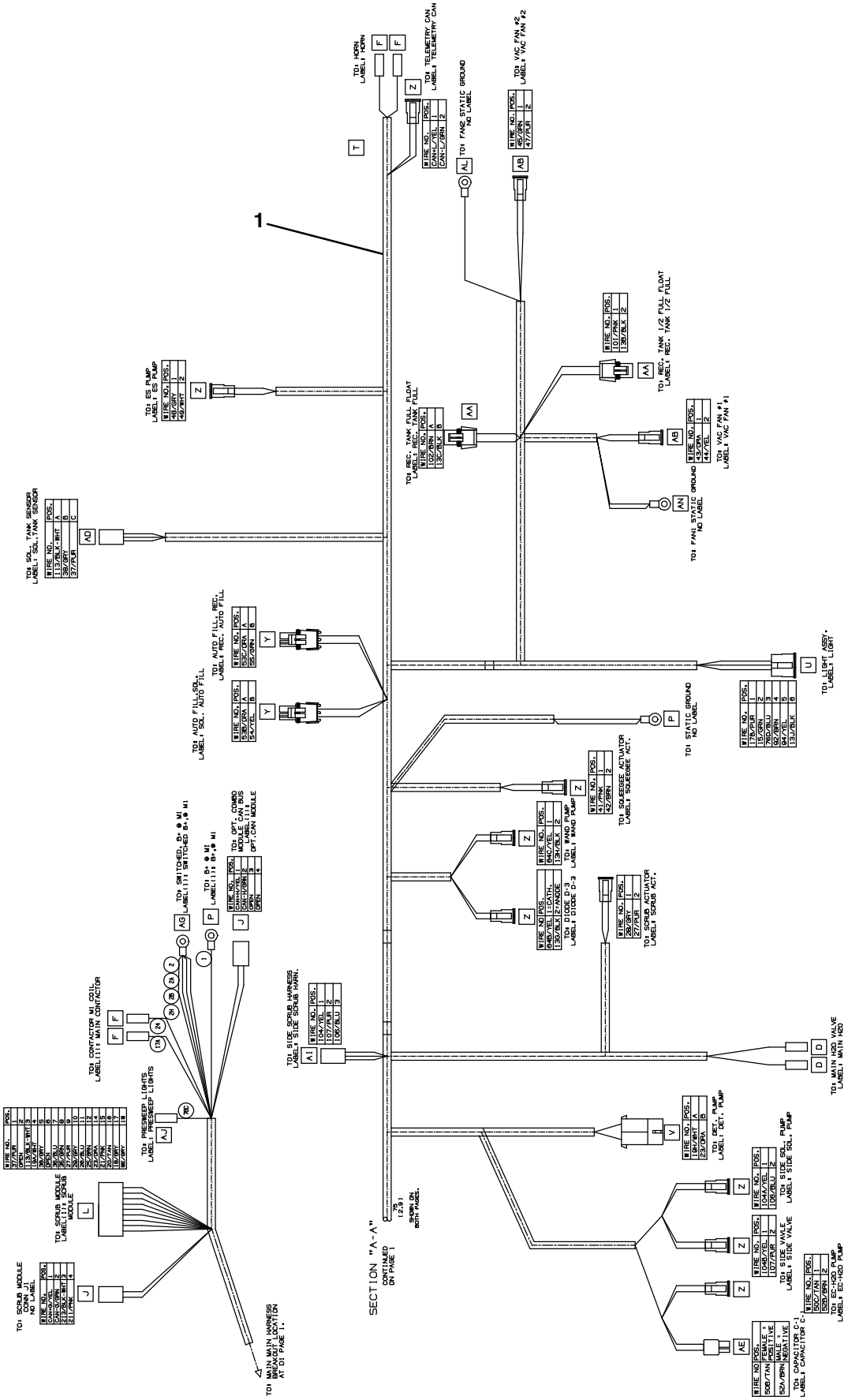

Fig. 33 – Wire Harnesses Group

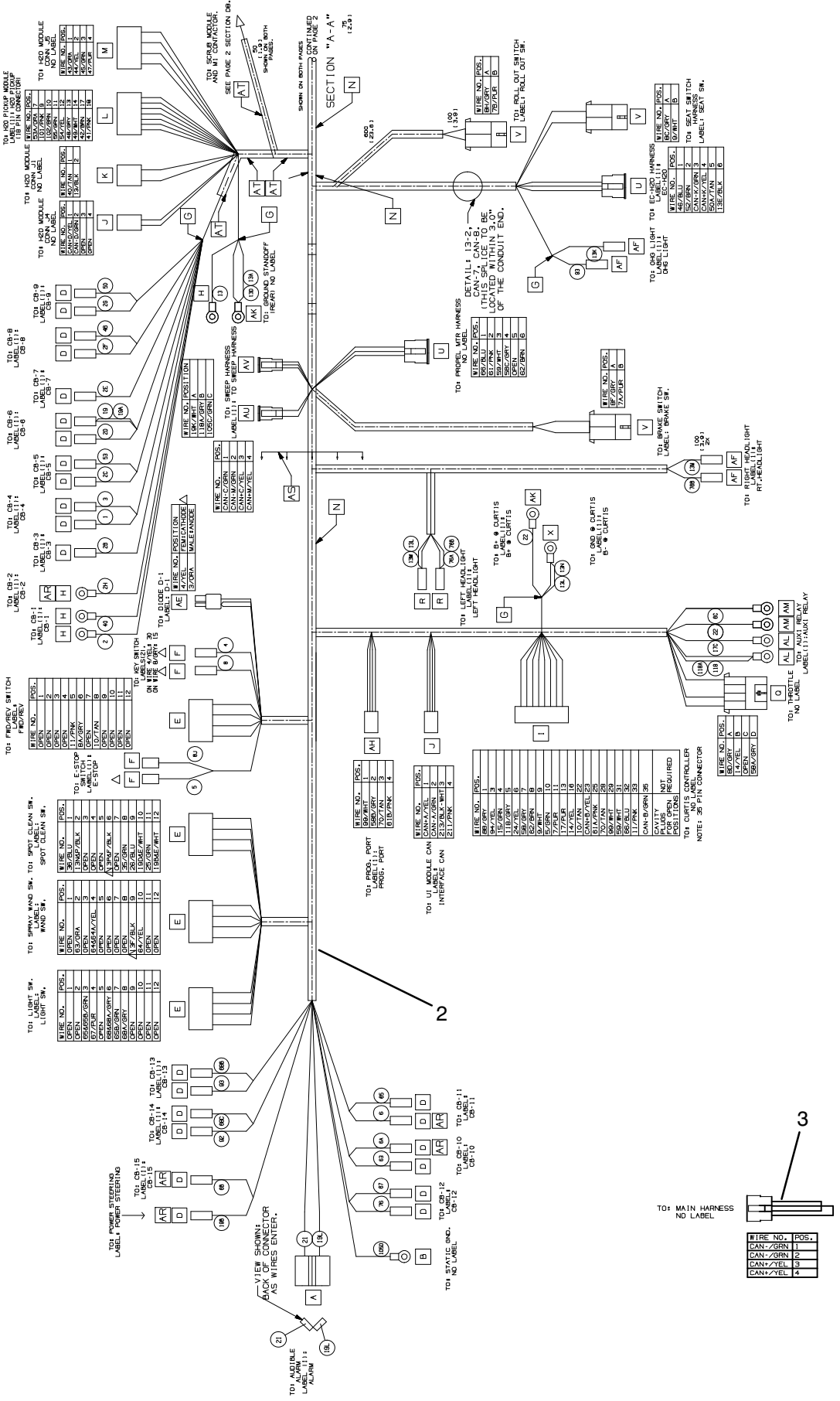

Fig. 33 – Wire Harnesses Group

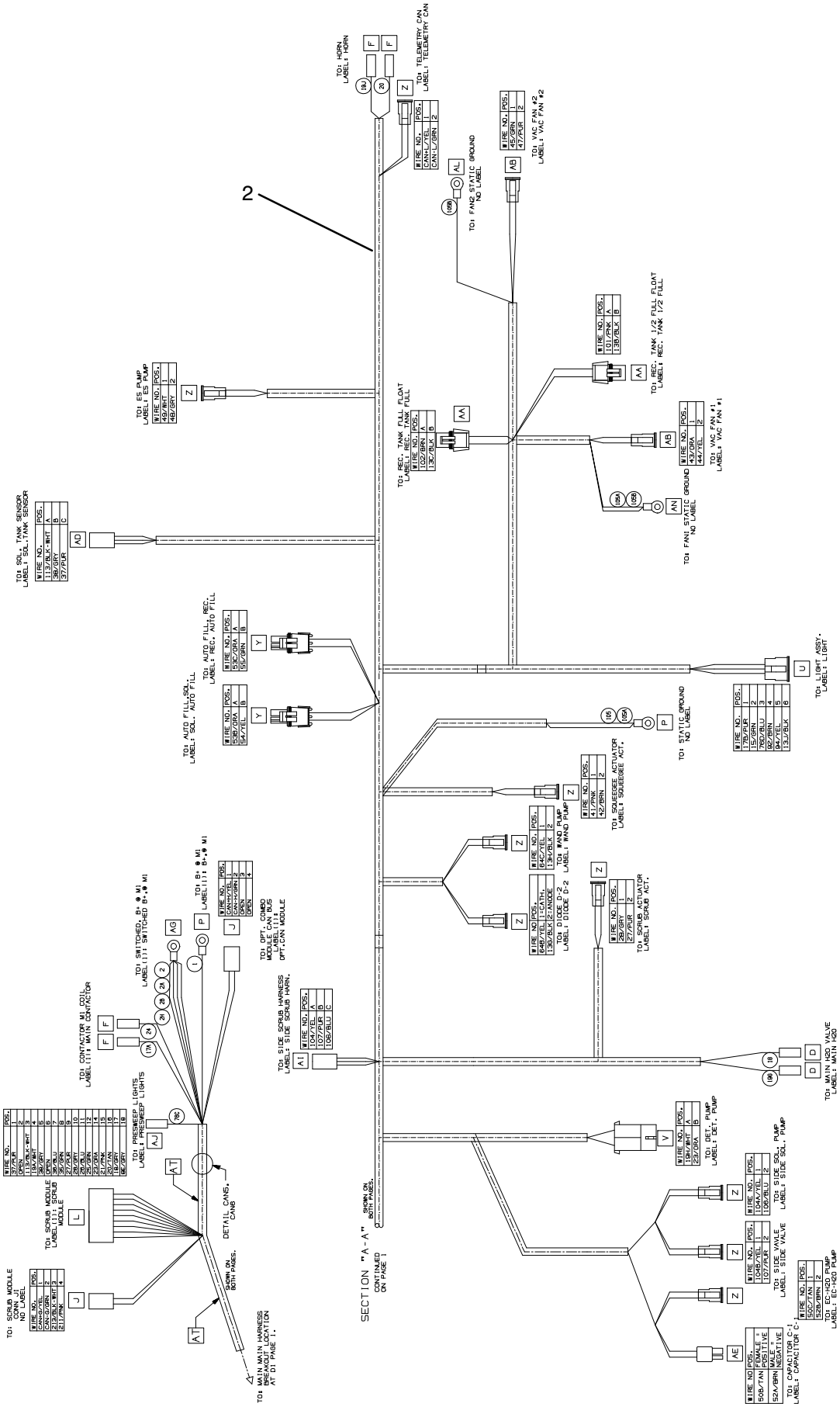

Fig. 33 – Wire Harnesses Group

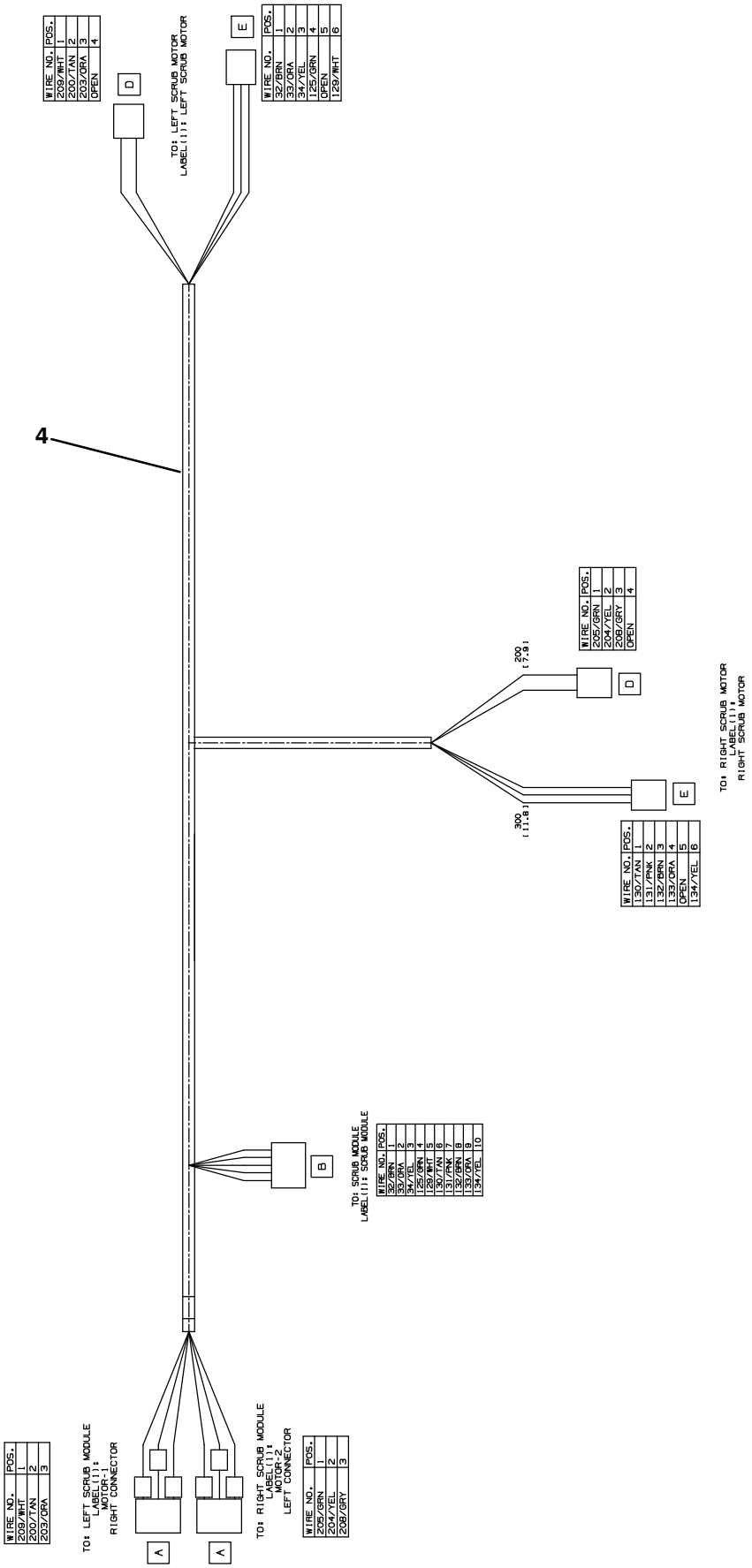

356517

Fig. 33 – Wire Harnesses Group

Ref.	Part No.	Serial Number	Description	Qty.
1	9014994	(0000–0399)	Harness Kit, Main, Afmkt [T17]	1
2	1074597	(0400–)	Harness, Ele, Main	1
3	1074604	(0400–)	Harness, Ele [Can Adaptor, T17]	1
4	1074103	(0000–)	Harness, Ele, Scrub motors [T17, Ferrite]	1

Fig. 34 – Label Group

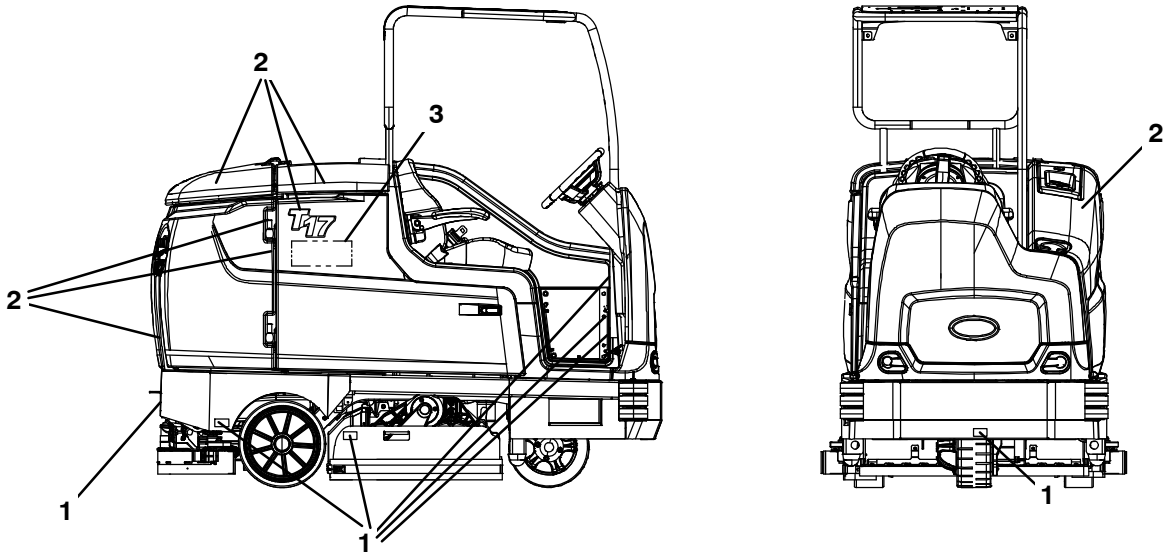

356511 – CE

Ref.	Part No.	Serial Number	Description	Qty.
1	1213445	(0000–)	Label Set, Info/Hzrd Viynl Ce [T17]	1
2	1213444	(0000–)	Label Kit, Info/Hzrd Polycarb Ce [T17]	1
3	1062813	(0000–)	Label, Logo, 12.3l 4color [Ec–H2o]	2
3	1065343	(0000–)	Label, Logo, 05.75l 2color [Es]	2

SECTION 3

Contents **Page**

Fig. 1 – Headlight Group 3-2
Fig. 2 – Strobe Light and Backup Alarm Kit 3-4
Fig. 3 – Strobe Light Kit, Overhead Guard 3-6
Fig. 4 – Overhead Guard Group 3-8
Fig. 5 – Power Steering Group (0000–0399) . . . 3-10
Fig. 6 – Power Steering Group (0400–) . . 3-12
Fig. 7 – Power Steering Wire Harness Group . . 3-14
Fig. 8 – Scrubbing Side Brush Lift Group 3-16
Fig. 9 – Scrubbing Side Brush Motor and Squeegee Group 3-18
Fig. 10 – Scrubbing Side Brush Mount Group . . 3-20
Fig. 11 – Scrubbing Side Brush Solution Supply Group 3-22
Fig. 12 – Scrubbing Side Brush Electrical Group 3-24
Fig. 13 – Scrubbing Side Brush Wire Harness Group 3-26
Fig. 14 – Sweeping Side Brush Drive Motor Group, Right Side 3-28
Fig. 15 – Sweeping Side Brush Lift Group, Right Side 3-30
Fig. 16 – Sweeping Side Brush Drive Motor Group, Left Side 3-32
Fig. 17 – Sweeping Side Brush Lift Group, Left Side 3-34
Fig. 18 – Sweeping Side Brush Electrical Group 3-36
Fig. 19 – Sweeping Side Brush Wire Harness Group 3-38
Fig. 20 – Pre–Sweep Hopper Cover Group 3-40
Fig. 21 – Pre–Sweep Hopper and Vacuum Fan Group 3-42
Fig. 22 – Pre–Sweep Brush Drive Group 3-44
Fig. 23 – Pre–Sweep Brush Idler Group 3-46
Fig. 24 – Pre–Sweep Side Brush Group 3-48
Fig. 25 – Pre–Sweep Electrical Group 3-50
Fig. 26 – Pre–Sweep Wire Harnesses Group . . . 3-52
Fig. 27 – Auto Fill Group 3-56
Fig. 28 – ES Auto Fill Group 3-58
Fig. 29 – ES Pump Group 3-60
Fig. 30 – ES Detergent Metering / Severe Environment Group 3-62
Fig. 31 – ec–H20 Solution Pump Group 3-64
Fig. 32 – ec–H20 solution Supply Group, Side Brush 3-66
Fig. 33 – ec–H20 Wire Harness Group 3-68
Fig. 34 – Spray Nozzle Group 3-70
Fig. 35 – Vacuum Wand Kit 3-72
Fig. 36 – Squeegee Guard Group 3-74
Fig. 37 – Positive Solution Control Drain Group . 3-76
Fig. 38 – Telemetry Group 3-78
Fig. 39 – Battery Rollout Group 3-80
Fig. 40 – Battery Group 3-82
Fig. 41 – Battery Charger Group 3-83
Fig. 42 – Ramp Climb Counter Weight Group . . 3-84
Fig. 43 – Documentation Group 3-85

Fig. 1 – Headlight Group

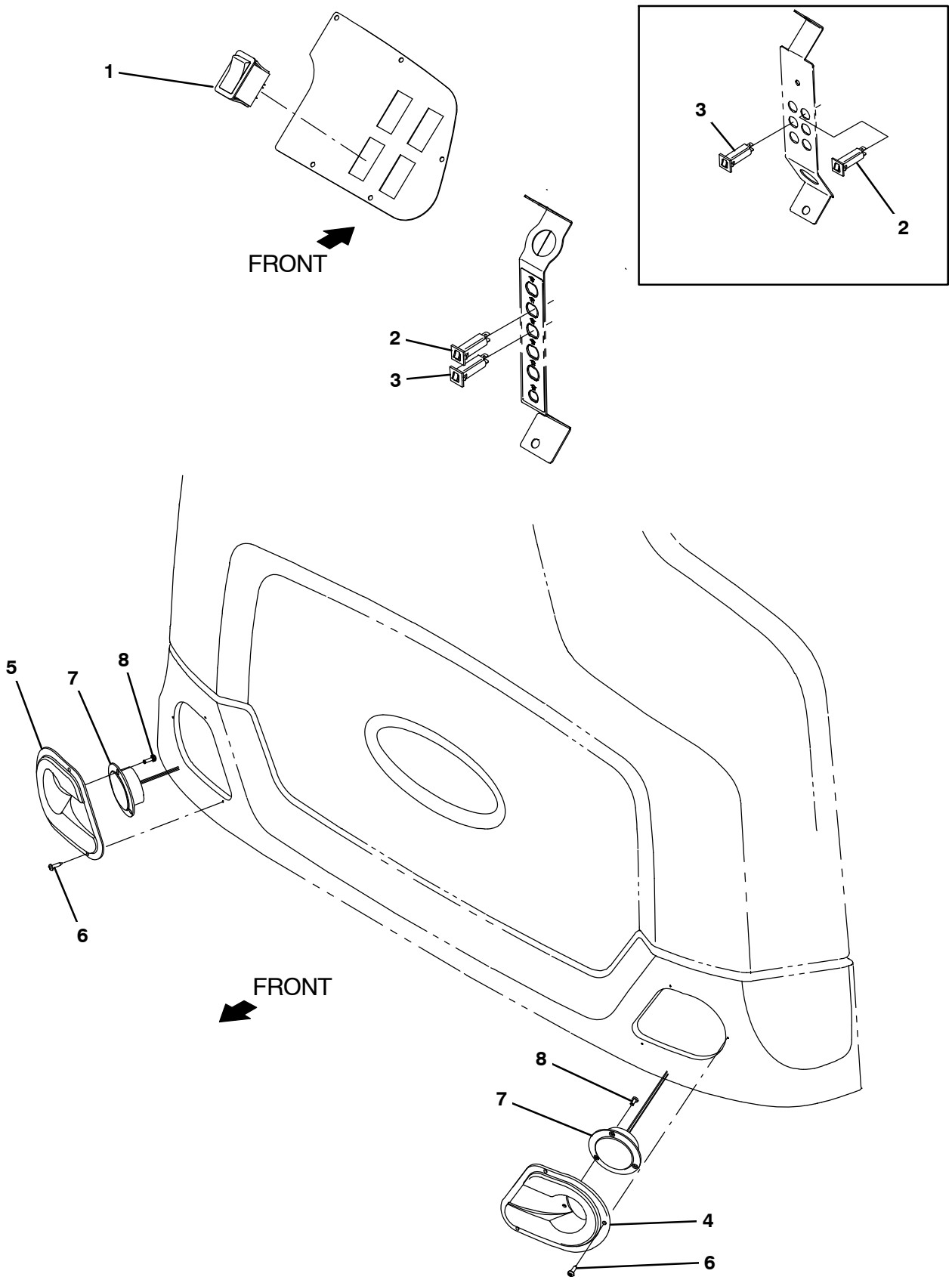

356490

Fig. 1 – Headlight Group

Ref.	Part No.	Serial Number	Description	Qty.
1	377084	(0000–)	Switch, Rocker, Prgrsv	1
2	1064188	(0000–)	Circuitbreaker, 15.0a, Resetable	1
3	1064184	(0000–)	Circuitbreaker, 02.5a, Resetable	1
4	1202870	(0000–)	Bezel, Headlight, Lh [W/Inserts]	1
5	1202892	(0000–)	Bezel, Headlight, Rh [W/Inserts]	1
6	140825	(0000–)	Screw, Pan, Phl, 06 X 0.50, Fmg/Ab, Blk	6
7	9008182	(0000–)	Light Assy, Pre–Sweep, Afmkt	2
8	06920	(0000–)	Screw, Pan, Phl, M3 X 0.50 X 10, 4.8	6

Fig. 2 – Strobe Light and Backup Alarm Kit

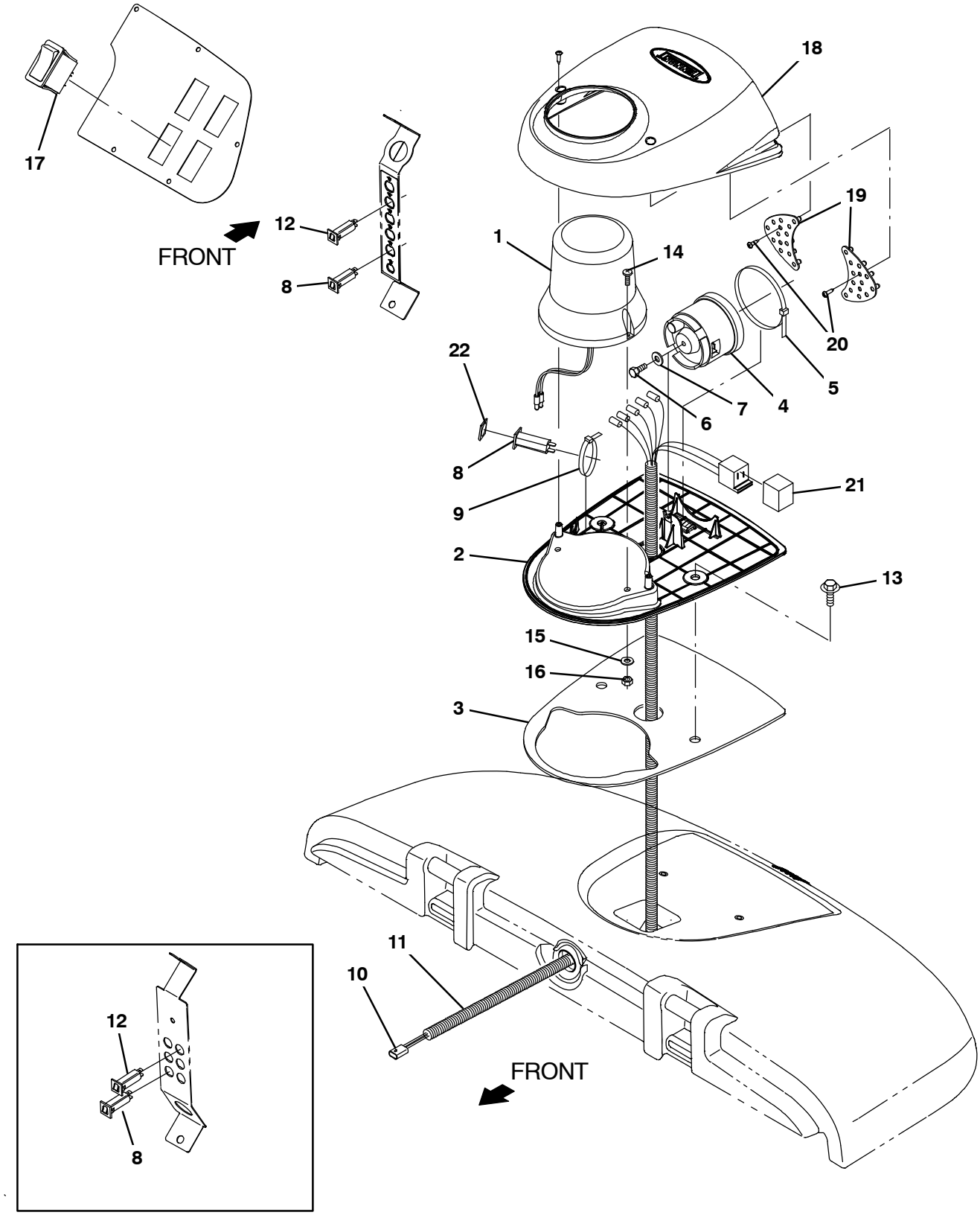

356501

Fig. 2 – Strobe Light and Backup Alarm Kit

	Ref.	Part No.	Serial Number	Description	Qty.
▽		9020109	(0000–)	Light Kit, Strobe, Module CI [T17]	1
▲▽	1	83159	(0000–)	Light, Strobe, Amb, 12–48vdc, Rwk	1
▲▲		9000845	(0000–)	Lamp, Bulb, Strobe	1
▲▲		9000879	(0000–)	Lens, Amb, F/ Revl / Flasher	1
▲	2	1059938	(0000–)	Base, Module, Light	1
▲	3	1063263	(0000–)	Gasket, Base, Module	1
▲	4	1058694	(0000–)	Alarm, Backup, 12–48vdc, Adj	1
▲	5	49263	(0000–)	Tie, Cable, Nyl, 11.4l .19w 3.0 Max D	1
▲	6	19315	(0000–)	Screw, Hex, .25–20 X 0.50, G5	1
▲	7	32483	(0000–)	Washer, Flat, 0.25, Sae	1
▲	8	1064184	(0000–)	Circuitbreaker, 02.5a, Resetable	2
▲	9	49266	(0000–)	Tie, Cable, Nyl, 07.3l .19w 1.8 Max D	1
▲	10	1056979	(0000–)	Harness, Wire, Alarm / Light [T16]	1
▲	11	48258	(0000–)	Sleeve, Vyl, Flex, .23Id	1
▲	12	1064188	(0000–)	Circuitbreaker, 15.0a, Resetable	1
▲	13	1020341	(0000–)	Screw, Hex, M8 X 1.25 X 20, Ss, Sems	2
▲	14	06933	(0000–)	Screw, Pan, Phl, M5 X 0.80 X 16, 4.8	2
▲	15	19066	(0000–)	Washer, Flat, 0.25b 0.56d .05, Pl, 10	2
▲	16	06549	(0000–)	Nut, Hex, Lock, M5 X 0.80, Nl	2
▲	17	377084	(0000–)	Switch, Rocker, Prgrsv	1
▲	18	1062106	(0000–)	Cover, Module, Light	1
▲	19	1059342	(0000–)	Light Assy, Led	1
▲	20	222267	(0000–)	Screw, Pan, Phl, 06–20 X 0.50, Fmg/Ab	6
▲	21	398526	(0000–)	Relay, 36Vdc, 005A, Spdt No [Greenwich]	1
▲	22	1064191	(0000–)	Boot, Circuitbreaker	1
▲	23	10632–18	(0000–)	Grommet, Rbr, 0.69Id, F/1.0H, .25 Matl	1

Fig. 3 – Strobe Light Kit, Overhead Guard

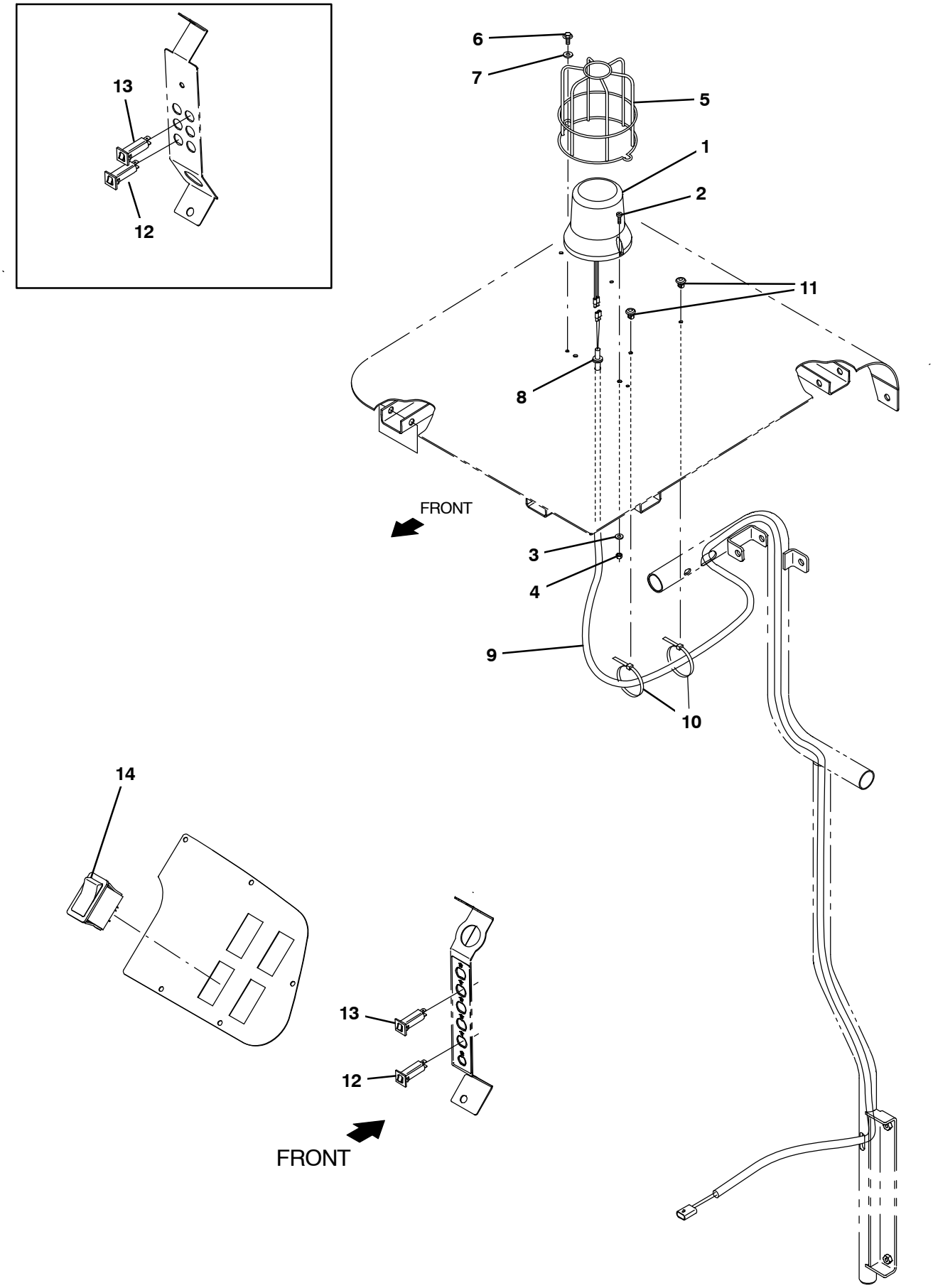

356502

Fig. 3 – Strobe Light Kit, Overhead Guard

	Ref.	Part No.	Serial Number	Description	Qty.
▽		9020107	(0000–)	Light Kit, Strobe, Ohg, Ci [T17]	1
▲▽	1	83159	(0000–)	Light, Strobe, Amb, 12–48vdc, Rwk	1
▲▲		9000845	(0000–)	Lamp, Bulb, Strobe	1
▲▲		9000879	(0000–)	Lens, Amb, F/ Revl / Flasher	1
▲	2	06933	(0000–)	Screw, Pan, Phl, M5 X 0.80 X 16, 4.8	2
▲	3	19066	(0000–)	Washer, Flat, 0.25b 0.56d .05, Pl, 10	2
▲	4	06549	(0000–)	Nut, Hex, Lock, M5 X 0.80, Nl	2
▲	5	1039392	(0000–)	Guard, Light, Revl / Strobe	1
▲	6	74455	(0000–)	Screw, Hex, M6 X 1.00 X 12, Fmg	2
▲	7	32490	(0000–)	Washer, Flat, 0.25, Std	2
▲	8	10632–2	(0000–)	Grommet, Rbr, 0.62id, F/0.9h, .12 Matl	1
▲	9	1069746	(0000–)	Harness, Ele, Ohg [T12]	1
▲	10	130773	(0000–)	Tie, Cable, Nyl, 11.0l, .14w, 3.0 Max. D	3
▲	11	1071085	(0000–)	Clip, Tie, 0.25d, Plstc	3
▲	12	1064184	(0000–)	Circuitbreaker, 02.5a, Resetable	2
▲	13	1064188	(0000–)	Circuitbreaker, 15a, Resetable	1
▲	14	377084	(0000–)	Switch, Rocker, Prgrsv	1

Fig. 4 – Overhead Guard Group

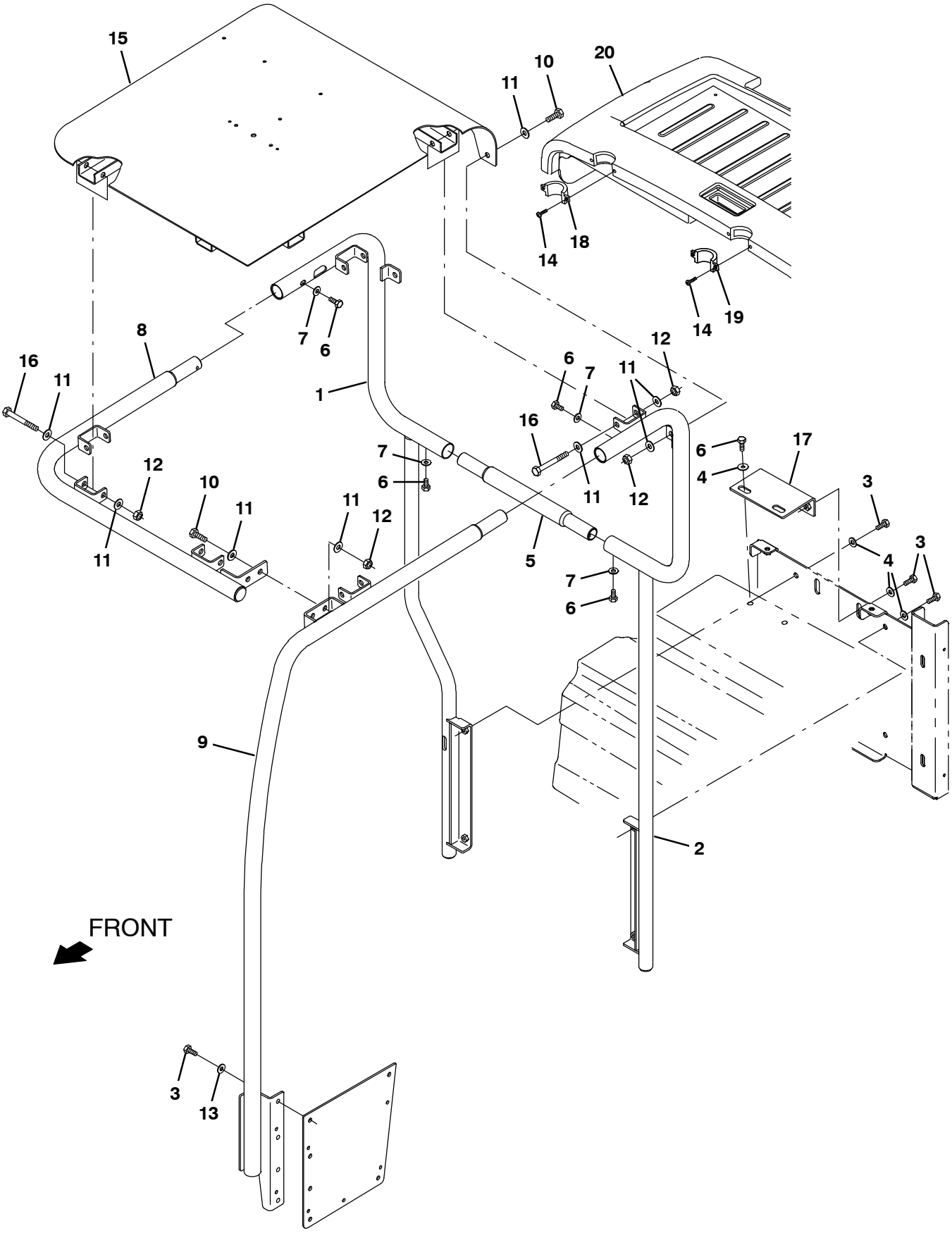

356491

Fig. 4 – Overhead Guard Group

Ref.	Part No.	Serial Number	Description	Qty.
1	1204974	(0000–)	Tube Wldt, Ohg, Rh	1
2	1204926	(0000–)	Tube Wldt, Ohg, Lh	1
3	12273	(0000–)	Screw, Hex, M8 X 1.25 X 20, Nl, Ss	10
4	1017218	(0000–)	Washer, Flat, 0.32B 1.00D .12, Ss	8
5	1208128	(0000–)	Tube, Ohg, Middle, Rear	1
6	49826	(0000–)	Screw, Hex, M8 X 1.25 X 16, Nl, Ss	6
7	39349	(0000–)	Washer, Flat, 0.31, Sae	4
8	1207444	(0000–)	Tube Wldt, Front	1
9	1207725	(0000–)	Tube Wldt, Guard, Lh, Front	1
10	03192	(0000–)	Screw, Hex, M10 X 1.50 X 30, 8.8	4
11	01686	(0000–)	Washer, Flat, 0.44b 1.00d .08, Ss	20
12	41430	(0000–)	Nut, Hex, Lock, M10 X 1.5, Nl	10
13	01685	(0000–)	Washer, Flat, 0.38b 0.88d .08, Ss	4
14	1060103	(0000–)	Screw, Pan, Phl, 08–16 X 1.13, F/ Plstc	4
15	1204972	(0000–)	Guard Wldt, Top, Ohg	1
16	03193	(0000–)	Screw, Hex, M10 X1.50 X 90, 8.8	6
17	1209915	(0000–)	Bracket Wldt, Mtg, Ohg	1
18	1208710	(0000–)	Cover, Ohg, Trim, Rh	1
19	1208714	(0000–)	Cover, Ohg, Trim, Lh	1
20	9013794	(0000–)	Kit, Replmt, Cover, Battery, OHG, Ce	1

Fig. 5 – Power Steering Group (0000–0399)

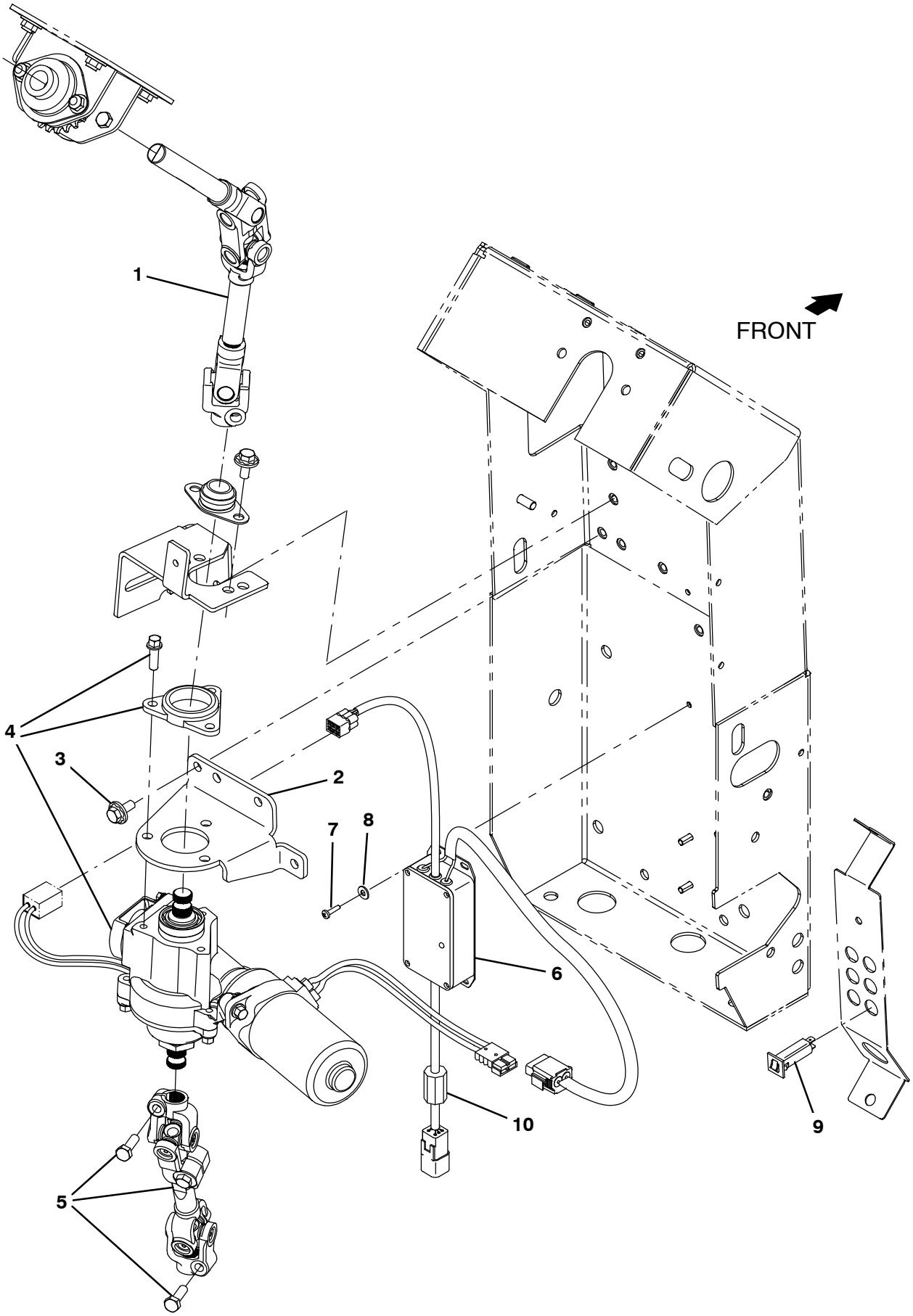

356489

Fig. 5 – Power Steering Group (0000–0399)

Ref.	Part No.	Serial Number	Description	Qty.
1	1208122	(0000–3999)	Shaft, Steering, Power, Upper	1
2	1205262	(0000–3999)	Bracket, Mtg, Steering	1
3	1020341	(0000–3999)	Screw, Hex, M8 X 1.25 X 20, Ss, Sems	4
4	1204306	(0000–3999)	Motor Assy, Steering, Power, 12v	1
5	1209652	(0000–3999)	Shaft, Steering, Power, Lower	1
6	1208907	(0000–3999)	Controller, Steering, 36v	1
7	24265	(0000–3999)	Screw, Pan, Phl, M4 X 0.70 X 16, Ss	3
8	01683	(0000–3999)	Washer, Flat, 10, Ss	3
9	1064188	(0000–3999)	Circuitbreaker, 15.0a, Resetable	1
10	1052126	(0000–3999)	Inductor, 12.7Mm [156 Imp At 25Mhz]	1

Fig. 6 – Power Steering Group (0400–)

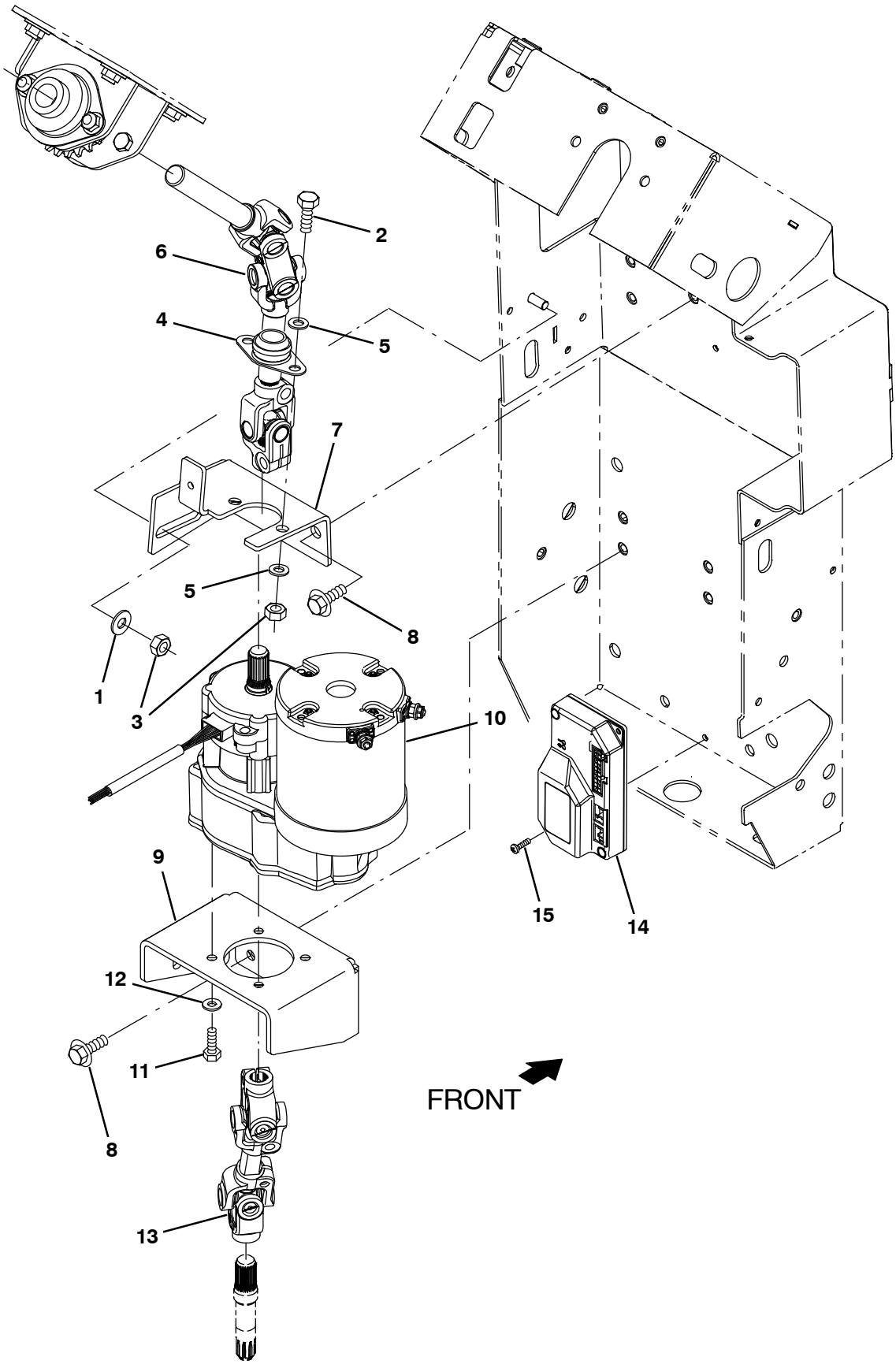

356489

Fig. 6 – Power Steering Group (0400–)

	Ref.	Part No.	Serial Number	Description	Qty.
	1	32491	(0400–)	Washer, Flat, 0.31, Std	4
	2	16931	(0400–)	Screw, Hex, M8 X 1.25 X 20, 8.8	2
	3	08709	(0400–)	Nut, Hex, Lock, M8 X 1.25, Nl	5
	4	223065	(0400–)	Bearing, Flng, 2hole, 0.75b [Nyl]	1
	5	39349	(0400–)	Washer, Flat, 0.31, Sae	4
	6	1224777	(0400–)	Shaft, Steering, Power, Upper	1
	7	1214737	(0400–)	Bracket, Brg, Steering	1
	8	1020341	(0400–)	Screw, Hex, M8 X 1.25 X 20, Ss, Sems	7
	9	1214622	(0400–)	Bracket, Sppt, Motor	1
▽		9015049	(0400–)	Motor Assy Kit, Steering, Afmkt [M17]	1
▲	10	1217601	(0400–)	Motor Assy, Steering, Power, 36v	1
▲	11	12274	(0400–)	Screw, Hex, M6 X 1.00 X 20, 8.8, Nl	4
▲	12	32483	(0400–)	Washer, Flat, 0.25, Sae	4
▲		1008142	(0400–)	Switch, snap, 25a Spdt	1
	13	1224776	(0400–)	Shaft, Steering, Power, Lower	1
▽		9015050	(0400–)	Controller Kit, Steer, Afmkt	1
▲	14	1217792	(0400–)	Controller, Steering, 36v	1
▲	15	06927	(0400–)	Screw, Pan, Phl, M4 X 0.70 X 16, 4.8	2
▲		1008142	(0400–)	Switch, snap, 25a Spdt	1

Fig. 7 – Power Steering Wire Harness Group

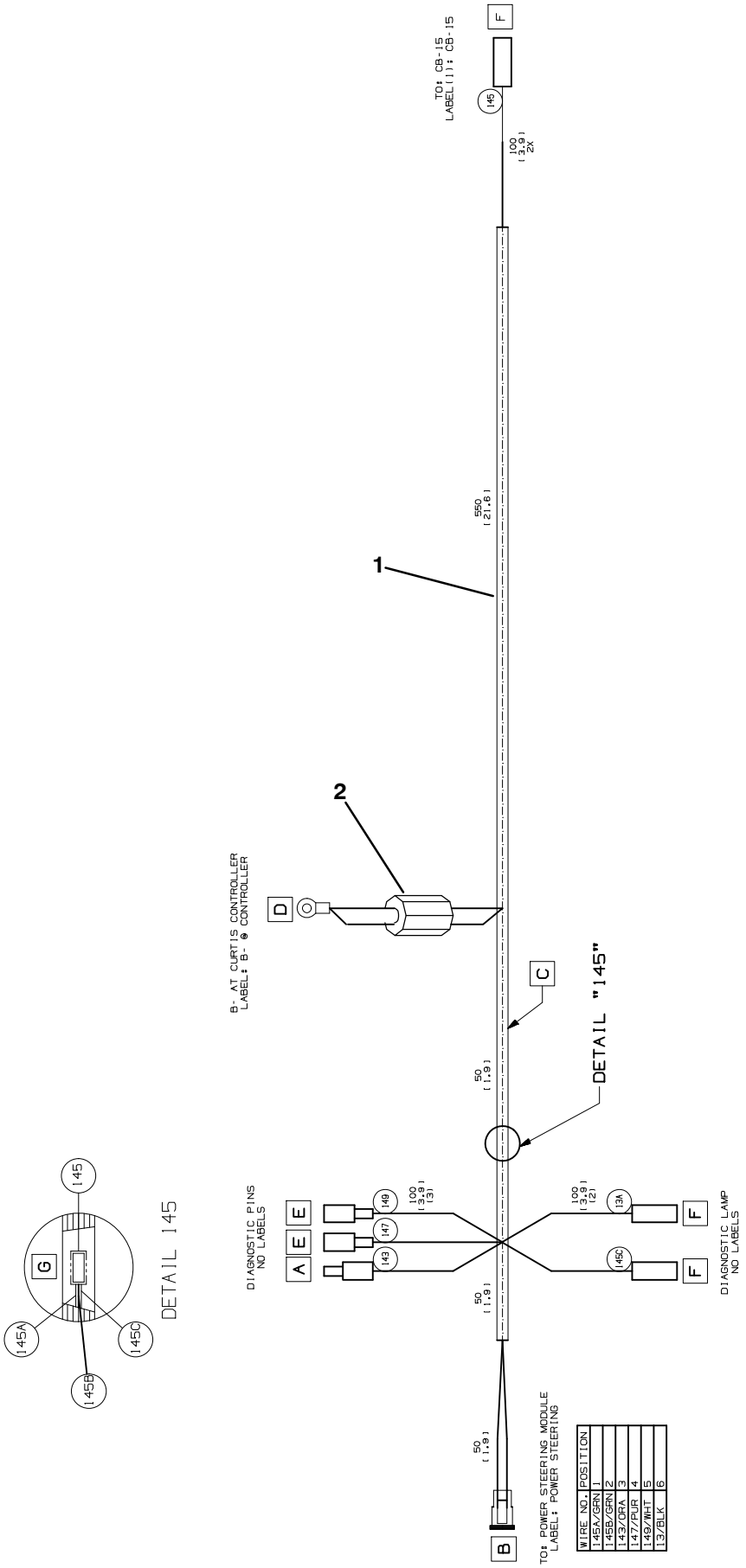

Fig. 7 – Power Steering Wire Harness Group

Ref.	Part No.	Serial Number	Description	Qty.
1	1073062	(0000–)	Harness, Ele [Power Steering, T17]	1
2	1060276	(0000–)	Inductor, 36.2 Mml, Rnd [Ferrite 1–300Hz]	1

Fig. 8 – Scrubbing Side Brush Lift Group

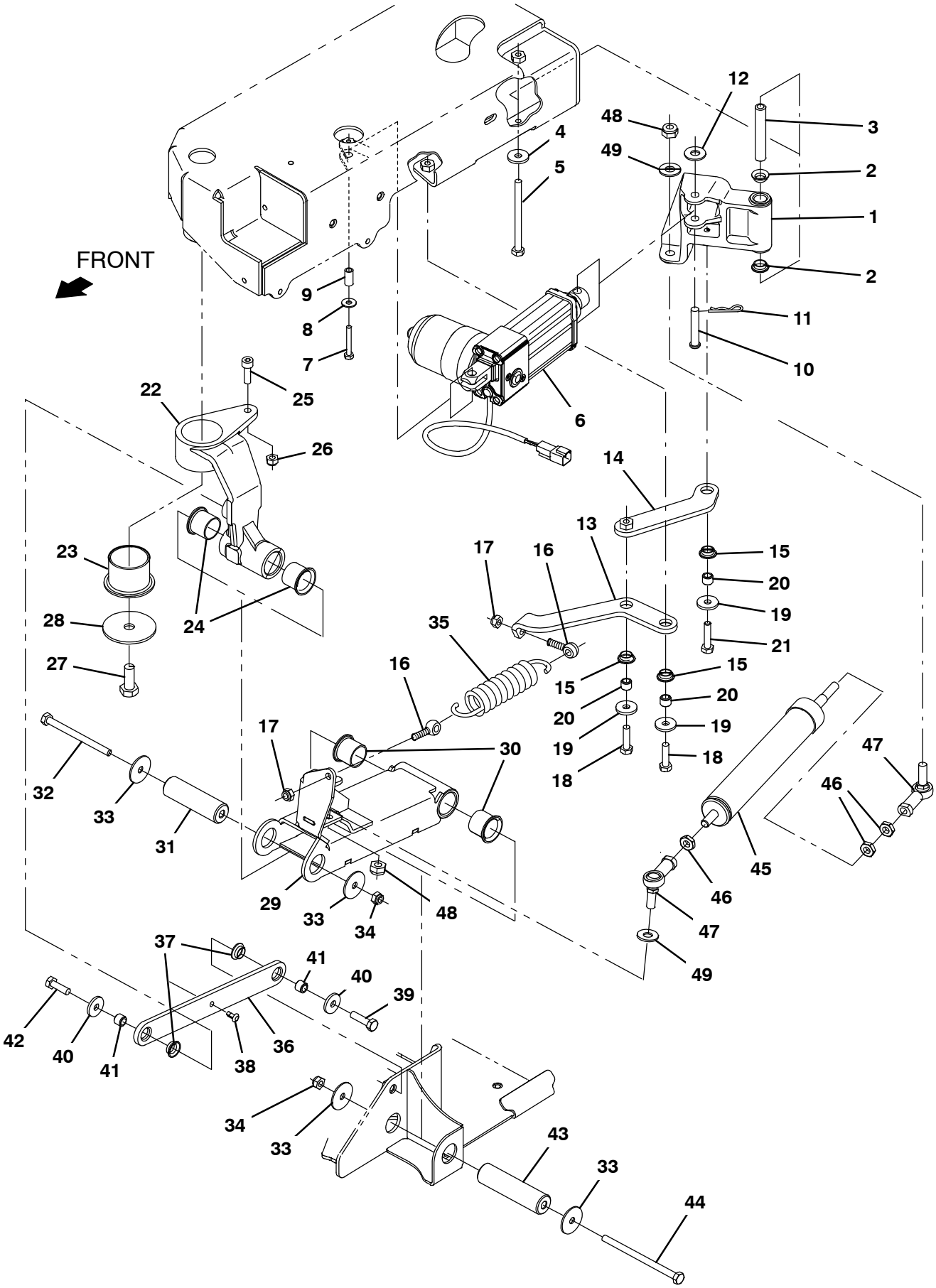

356474

Fig. 8 – Scrubbing Side Brush Lift Group

	Ref.	Part No.	Serial Number	Description	Qty.
▽	1	9020268	(0000–)	Pivot Arm Kit, Act, Sba, Afmkt [T17]	1
▲	2	1054662	(0000–)	Bushing, Flng, 0.50b 0.59d 0.25l	2
▲	3	1206723	(0000–)	Sleeve, P/M, 0.32b 0.50d 3.03l	1
	4	1017218	(0000–)	Washer, Flat, 0.32b 1.00d .12, Ss	1
	5	386299	(0000–)	Screw, Hex, M8 X 1.25 X 100, Ss	1
	6	1201500	(0000–)	Actuator, 36vdc, 2.75strk, 450lb	1
	7	33930	(0000–)	Screw, Hex, M6 X 1.00 X 40, Ss	1
	8	01684	(0000–)	Washer, Flat, 0.27b 0.69d .05, Ss	1
	9	1206722	(0000–)	Sleeve, P/M, 0.25b 0.38d 0.8l	1
	10	29584	(0000–)	Pin, Clevis, 0.37d X 2.00l	1
	11	44906	(0000–)	Pin, Cotter, Hair, 0.38d .093 Wir	1
	12	01686	(0000–)	Washer, Flat, 0.44b 1.00d .08, Ss	1
	13	1206422	(0000–)	Arm, Spring, Tensioner	1
	14	1206602	(0000–)	Arm Wldt, Spring, Tension	1
	15	1054662	(0000–)	Bushing, Flng, 0.50b 0.59d 0.25l	3
	16	69998	(0000–)	Bolt, Eye, M8 X 1.25 X 030mm, 08.00 Eye	2
	17	08713	(0000–)	Nut, Hex, Lock, M8 X 1.25, Nl, Ss	2
	18	09011	(0000–)	Screw, Hex, M8 X 1.25 X 30, Ss	2
	19	1017218	(0000–)	Washer, Flat, 0.32b 1.00d .12, Ss	3
	20	1207656	(0000–)	Sleeve, P/M, 0.32b 0.50d 0.4l [430ss]	3
	21	59658	(0000–)	Screw, Hex, M8 X 1.25 X 35, Nl, Ss	1
▽	22	9011054	(0000–)	Pivot Arm Kit, Sba, Afmkt [T12]	1
▲	23	1201101	(0000–)	Bushing, Flng, 1.75b 1.94d 1.50l	1
▲	24	54618	(0000–)	Bushing, Flng, 1.00b 1.13d 1.00l	2
▲	25	39308	(0000–)	Screw, Soc, M8 X 1.25 X 25, 12.9	1
▲	26	08713	(0000–)	Nut, Hex, Lock, M8 X 1.25, Nl, Ss	1
	27	12309	(0000–)	Screw, Hex, M12 X 1.75 X 30, Ss	1
	28	1200634	(0000–)	Washer, Flat, 0.48b 2.50d .12, Ss	1
▽	29	9020248	(0000–0399)	Channel Assy, Lift, Sba, Afmkt [T17]	1
▲	30	54618	(0000–0399)	Bushing, Flng, 1.00b 1.13d 1.00l	2
▽	29	9020248	(0400–)	Channel Assy, Lift, Sba, Afmkt [T17]	1
▲	30	54618	(0400–)	Bushing, Flng, 1.00b 1.13d 1.00l	2
	31	1210581	(0000–)	Pin, Pivot, Sba	1
	32	386299	(0000–)	Screw, Hex, M8 X 1.25 X 100, Ss	1
	33	1011719	(0000–)	Washer, Flat, 0.33b 1.38d .08, Ss	4
	34	08713	(0000–)	Nut, Hex, Lock, M8 X 1.25, Nl, Ss	2
	35	1031413	(0000–)	Spring, Extn, 1.68od 0.20wir 07.5l	1
▽	36	9020249	(0000–)	Link Kit, Upper, Sba, Afmkt [T17]	1
▲	37	1054662	(0000–)	Bushing, Flng, 0.50b 0.59d 0.25l	2
	38	1210807	(0000–)	Wire, Tie [W/.25” Fir Tree Clip]	1
	39	09011	(0000–)	Screw, Hex, M8 X 1.25 X 30, Ss	1
	40	1017218	(0000–)	Washer, Flat, 0.32b 1.00d .12, Ss	2
	41	1207656	(0000–)	Sleeve, P/M, 0.32b 0.50d 0.4l [430ss]	2
	42	09010	(0000–)	Screw, Hex, M8 X 1.25 X 25, Ss	1
	43	1209678	(0000–)	Pin, Pivot, Sba	1
	44	1210312	(0000–)	Screw, Hex, M8 X 1.25 X 120, Ss	1
▽	45	9010938	(0000–)	Spring Assy, Replmt, Afmkt [T12]	1
▲	46	763064	(0000–)	Nut, Hex, Jam, M10 X 1.5, [Din439]	3
▲	47	05686	(0000–)	Rod–End, M10 X 1.5rh Fem M10 X 1.5stud	2
▲	48	08714	(0000–)	Nut, Hex, Lock, M10 X 1.5, Nl, Ss	2
▲	49	01686	(0000–)	Washer, Flat, 0.44b 1.00d .08, Ss	2

Fig. 9 – Scrubbing Side Brush Motor and Squeegee Group

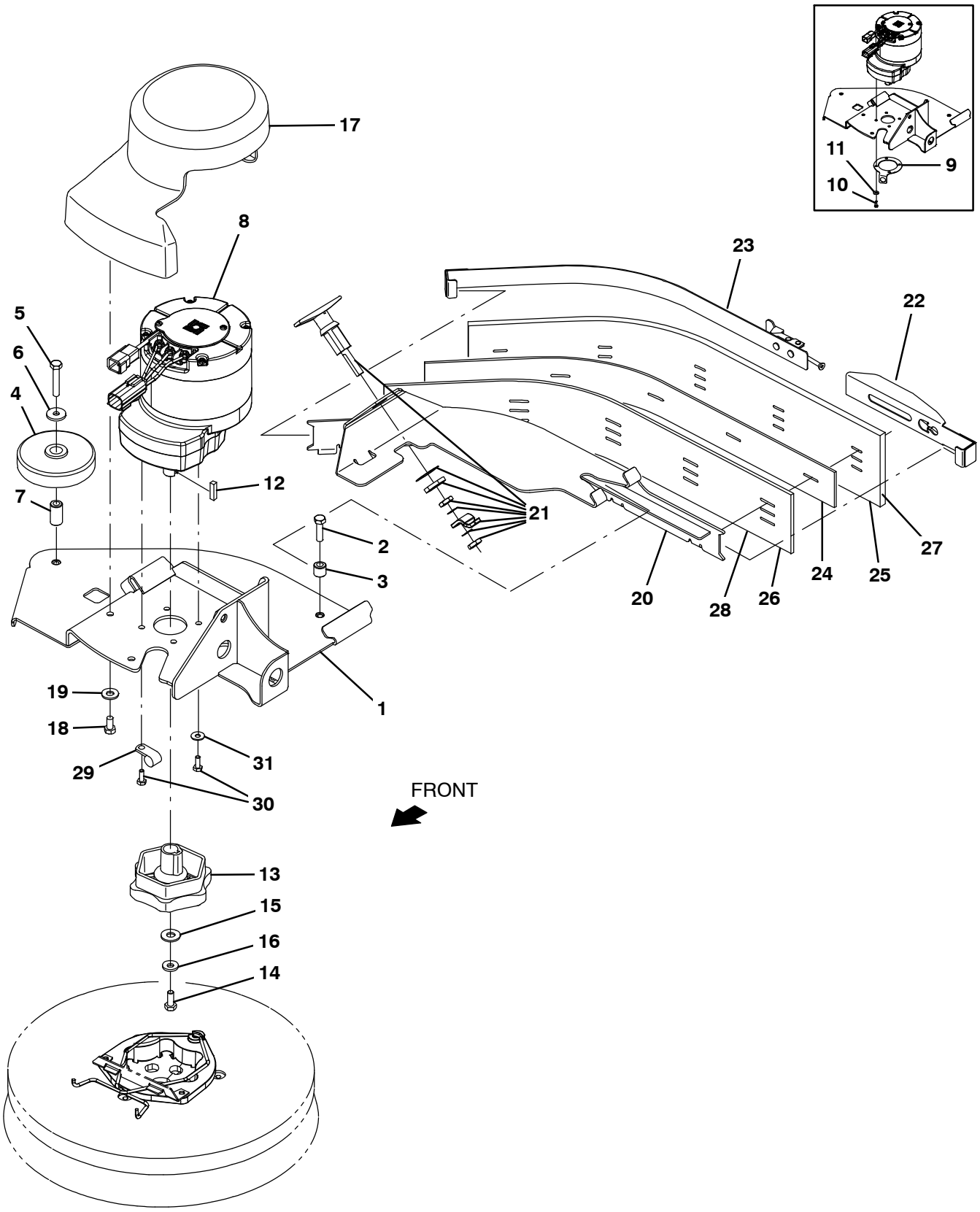

356472

Fig. 9 – Scrubbing Side Brush Motor and Squeegee Group

	Ref.	Part No.	Serial Number	Description	Qty.
	1	1205307	(0000–)	Bracket Wldt, Deck	1
	2	09011	(0000–)	Screw, Hex, M8 X 1.25 X 30, Ss	1
	3	80409	(0000–)	Sleeve, P/M, 0.34b 0.63d 0.6l, Bnz	1
	4	363162	(0000–)	Wheel, 04.0d 0.89w 0.64b	1
	5	222505	(0000–)	Screw, Hex, M8 X 1.25 X 45, Ss	1
	6	1017218	(0000–)	Washer, Flat, 0.32b 1.00d .12, Ss	1
	7	363301	(0000–)	Sleeve, P/M, 0.34b 0.63d 1.2l, Bnz	1
	8	1206475	(0000–)	Motor, Ele, 36 Vdc, 350 Rpm 1.25 Hp Gear	1
	9	1207718	(0000–0399)	Plate, Sppt (Replaced by 9014344)	1
	10	11329	(0000–0399)	Screw, Hex, M6 X 1.00 X 16, Nl, Ss	4
	11	01684	(0000–0399)	Washer, Flat, 0.27b 0.69d .05, Ss	4
	12	00928	(0000–)	Key, Sq, 0.25 X 0.25, 1.00l	1
	13	377364	(0000–)	Hub, Drive, Brush, Disk, 0.75b [6t]	1
	14	12273	(0000–)	Screw, Hex, M8 X 1.25 X 20, Nl, Ss	1
	15	01686	(0000–)	Washer, Flat, 0.44b 1.00d .08, Ss	1
	16	41186	(0000–)	Washer, Flat, Belleville, .31	1
	17	9020217	(0000–)	Cover, Motor, Sba, Afmkt[T17]	1
	18	15675	(0000–)	Screw, Hex, M8 X 1.25 X 16, Ss	2
	19	01685	(0000–)	Washer, Flat, 0.38b 0.88d .08, Ss	2
▽		9020247	(0000–)	Squeegee Assy, Sba, Afmkt [T17]	1
▲	20	1206597	(0000–)	Bracket Wldt, Sqge, Sba	1
▲	21	1201149	(0000–)	Latch, Compression, Sqge, Sba	1
▲	22	1201609	(0000–)	Retainer Wldt, Sqge, Sba	1
▲	23	1206592	(0000–)	Retainer Wldt, Sqge, Sba	1
▲	24	1206598	(0000–)	Spacer, Blade	1
▲	25	1206589	(0000–)	Blade, Sqge, Sba, Linatex	1
▲	26	1206599	(0000–)	Blade, Sqge, Sba, Inner	1
	27	1212163	(0000–)	Blade, Sqge, Sba, (Urethane)	1
	27	1212210	(0000–)	Blade, Sqge, Sba, (Gum Rubber)	1
	28	1212211	(0000–)	Blade, Sqge, Sba, Inner, (Urethane)	1
	28	1212212	(0000–)	Blade, Sqge, Sba, Inner, (Gum Rubber)	1
	29	26395–1	(0400–)	Clamp, Cable, Stl, 0.56D X 0.38W, 1 Hole	1
	30	11635	(0400–)	Screw, hex, M6 X 1.00 X 12, Ss	4
	31	01684	(0400–)	Washer, flat, 0.27B 0.69D .05, Ss	3

Fig. 10 – Scrubbing Side Brush Mount Group

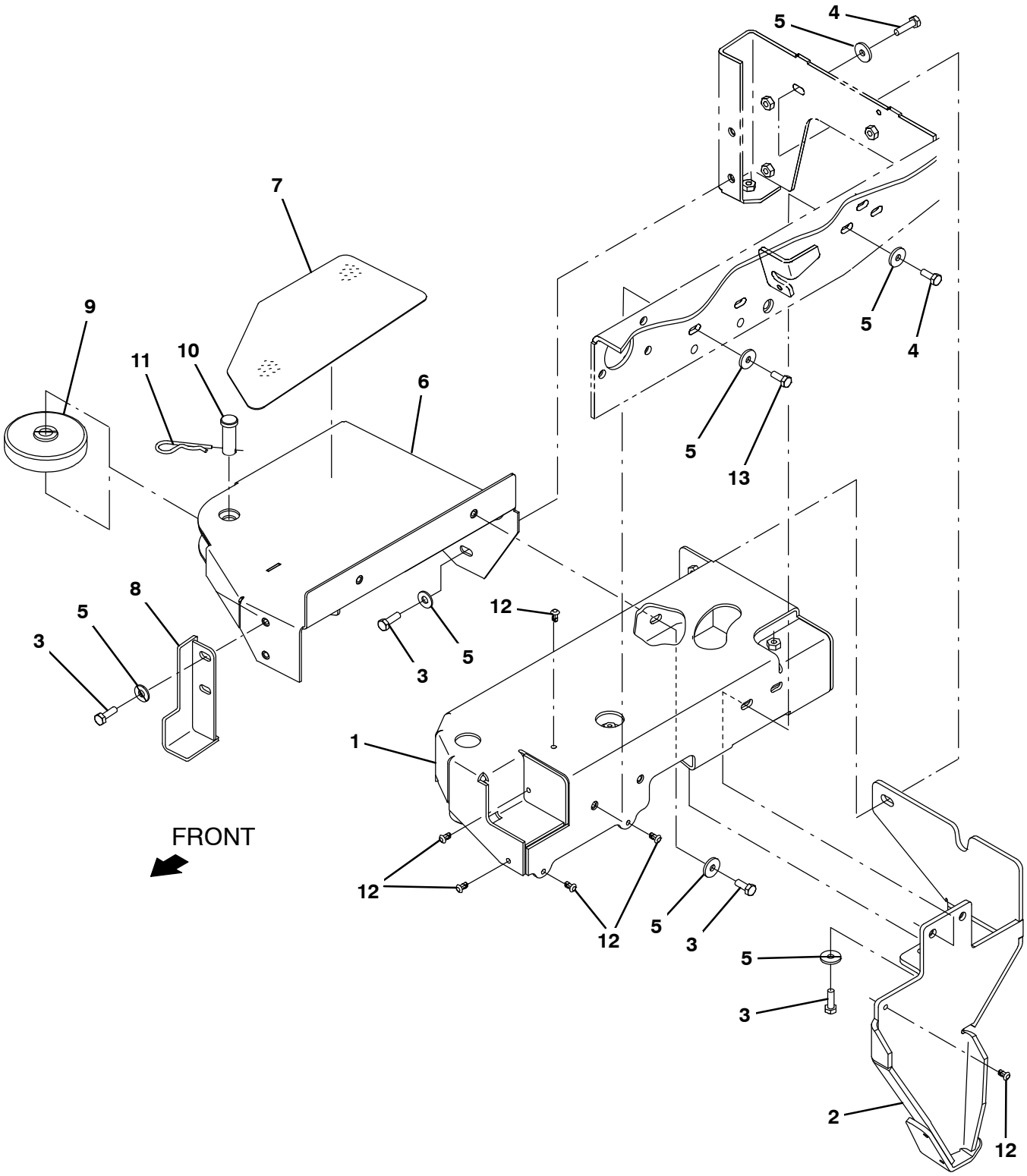

356473

Fig. 10 – Scrubbing Side Brush Mount Group

Ref.	Part No.	Serial Number	Description	Qty.
1	1205299	(0000–0399)	Cover Wldt, Sba	1
1	1222170	(0400–)	Cover Wldt, Sba	1
2	1206805	(0000–0399)	Bracket Wldt, Skid, Anti–Roll	1
2	1225419	(0400–)	Bracket Wldt, Skid, Anti–Roll	1
3	09010	(0000–)	Screw, Hex, M8 X 1.25 X 25, Ss	6
4	09011	(0000–)	Screw, Hex, M8 X 1.25 X 30, Ss	3
5	1017218	(0000–)	Washer, Flat, 0.32b 1.00d .12, Ss	12
6	1206809	(0000–)	Bracket Wldt, Step, Sba	1
7	1207657	(0000–)	Tread, Non–Skid–Step, 6.3w 12.8l, Sba	1
8	1208021	(0000–)	Door Wldt, Mtg, Sba	1
9	363162	(0000–)	Wheel, 04.0d 0.89w 0.64b	1
10	1207866	(0000–)	Pin, Clevis, 0.625d X 1.75l	1
11	55094	(0000–)	Pin, Cotter, Hair, 0.75d .148 Wir	1
12	1071085	(0000–)	Clip, Tie, 0.25d, Plstc	6
13	09740	(0000–)	Screw, Hex, M8 X 1.25 X 20, Ss	2

Fig. 11 – Scrubbing Side Brush Solution Supply Group

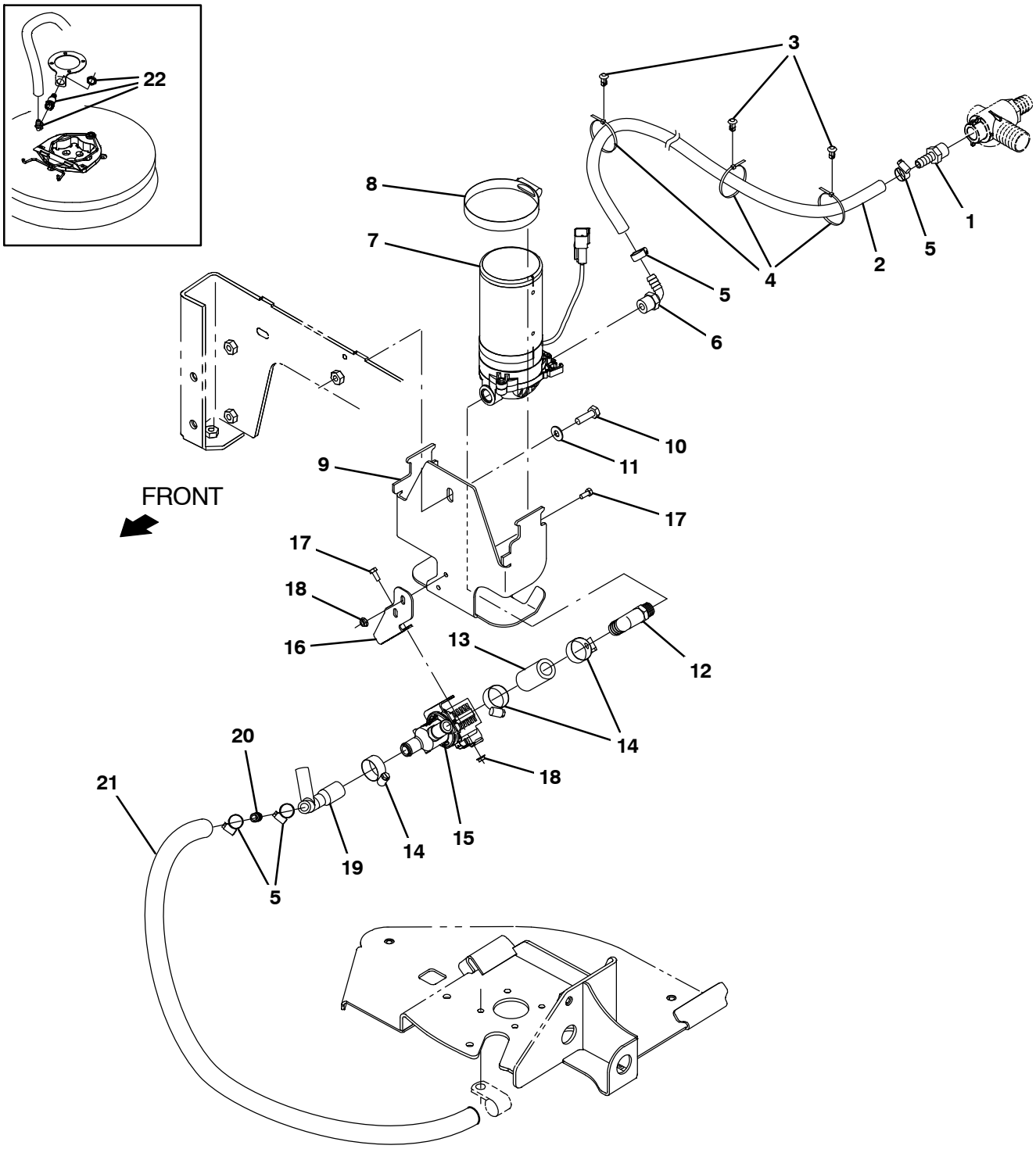

356476

Fig. 11 – Scrubbing Side Brush Solution Supply Group

Ref.	Part No.	Serial Number	Description	Qty.
1	150538	(0000–)	Fitting, Plstc, Str, Bm06/Pm06	1
2	1006400	(0000–)	Hose, Afmkt, Pvc, Brd, 0.38id, 03ft, Clr	1
3	1071085	(0000–)	Clip, Tie, 0.25d, Plstc	3
4	130773	(0000–)	Tie, Cable, Nyl, 11.0l, .14w, 3.0 Max. D	3
5	43844	(0000–)	Clamp, Hose, Wormdrive, 0.25–0.62d, .31w	4
6	1005630	(0000–)	Fitting, Plstc, E90, Bm06/Pm06, Nyl	1
7	1200328	(0000–)	Pump, Soltn, Ele, 36vdc, 60psi	1
8	43555	(0000–)	Clamp, Hose, Wormdrive, 2.62–3.50d	1
9	1206138	(0000–0399)	Bracket, Pump	1
9	1221952	(0400–)	Bracket, Pump	1
10	09010	(0000–)	Screw, Hex, M8 X 1.25 X 25, Ss	1
11	32490	(0000–)	Washer, Flat, 0.25, Std	1
12	1208433	(0000–)	Fitting, Plstc, E90, Bm10/Pm06	1
13	1015025	(0000–)	Hose, Afmkt, Pvc, Brd, 0.62id, 02ft, Clr	1
14	63810	(0000–)	Clamp, Hose, Wormdrive, 0.56–1.06d, .56w	3
15	1054795	(0000–)	Valve, Water, Solenoid, 36vdc Bm12/Bm12	1
16	1208434	(0000–)	Bracket, Mount, Sba Valve	1
17	09738	(0000–)	Screw, Hex, M5 X 0.80 X 12, Ss	4
18	07789	(0000–)	Nut, Hex, Flng, M5 X 0.80	4
19	1208432	(0000–)	Manifold, Sba	1
20	20950	(0000–)	Fitting, Plstc, Str, Bm06/Bm06	1
21	1014976	(0000–)	Hose, Afmkt, Pvc, Brd, 0.38id, 08ft, Clr	1
22	9014344	(0000–0399)	Hose Kit, Brush, Side [T17]	1

Fig. 12 – Scrubbing Side Brush Electrical Group

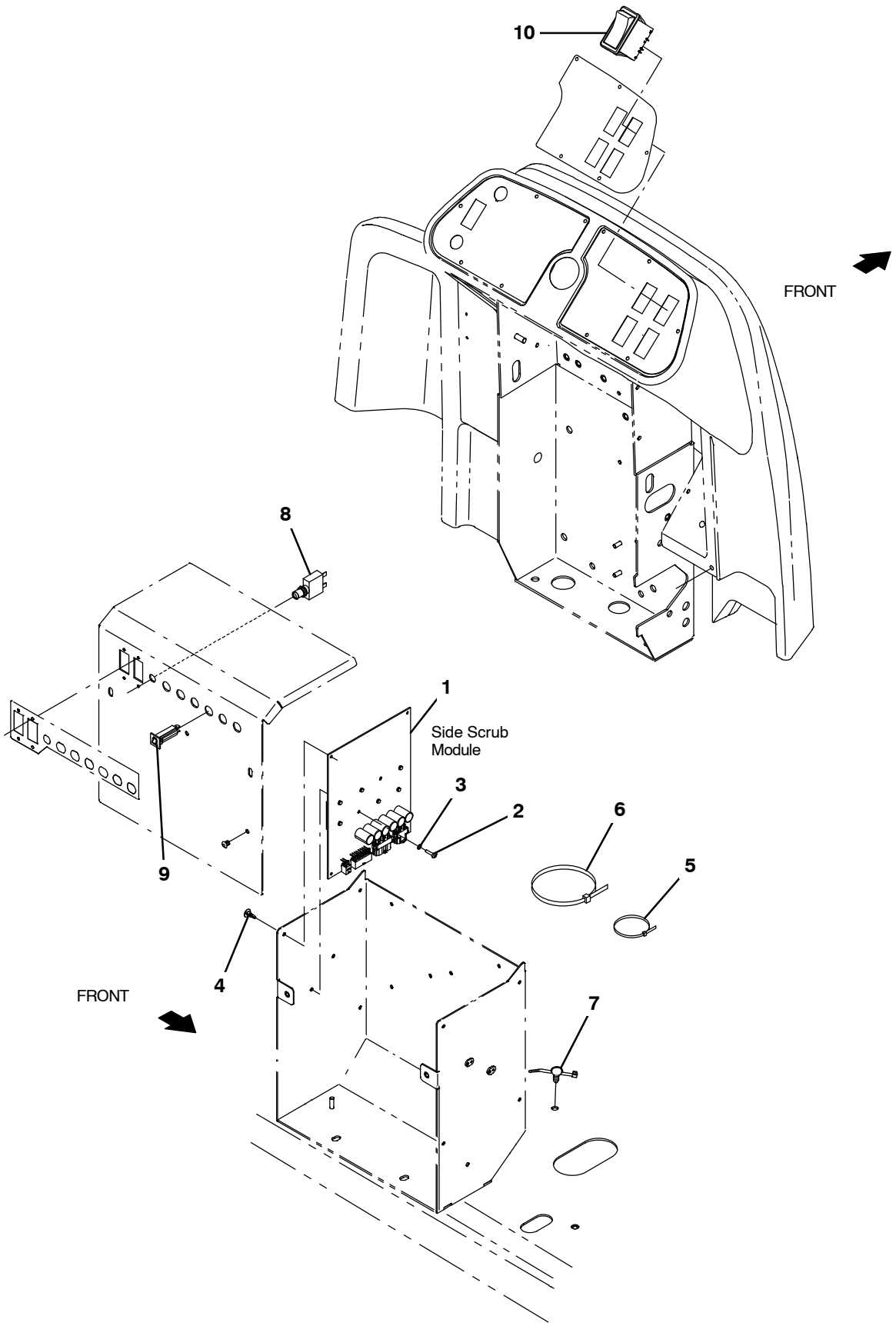

356475

Fig. 12 – Scrubbing Side Brush Electrical Group

Ref.	Part No.	Serial Number	Description	Qty.
1	9020230	(0000–)	Circuit Board Kit, Sba, Afmkt [T17]	1
2	06926	(0000–)	Screw, Pan, Phl, M4 X 0.70 X 10, 4.8	2
3	1202860	(0000–)	Washer, Flat, 0.17b 0.31d .03, Nyl	2
4	1210399	(0000–)	Stand–Off, Circuitboard [0.25”]	4
5	763114	(0000–)	Tie, Cable, 11.3l, 2.75d Max	3
6	222809	(0000–)	Tie, Cable, Nyl, 29.8l .30w 9.0 Max D	1
7	1210807	(0000–)	Wire, Tie [W/.25” Fir Tree Clip]	7
8	383726	(0000–)	Circuitbreaker, 35.0a, Resetable	1
9	1064184	(0000–)	Circuitbreaker, 02.5a, Resetable	1
10	397889	(0000–)	Switch, Rocker, Dpst, On / None / On	1

Fig. 13 – Scrubbing Side Brush Wire Harness Group

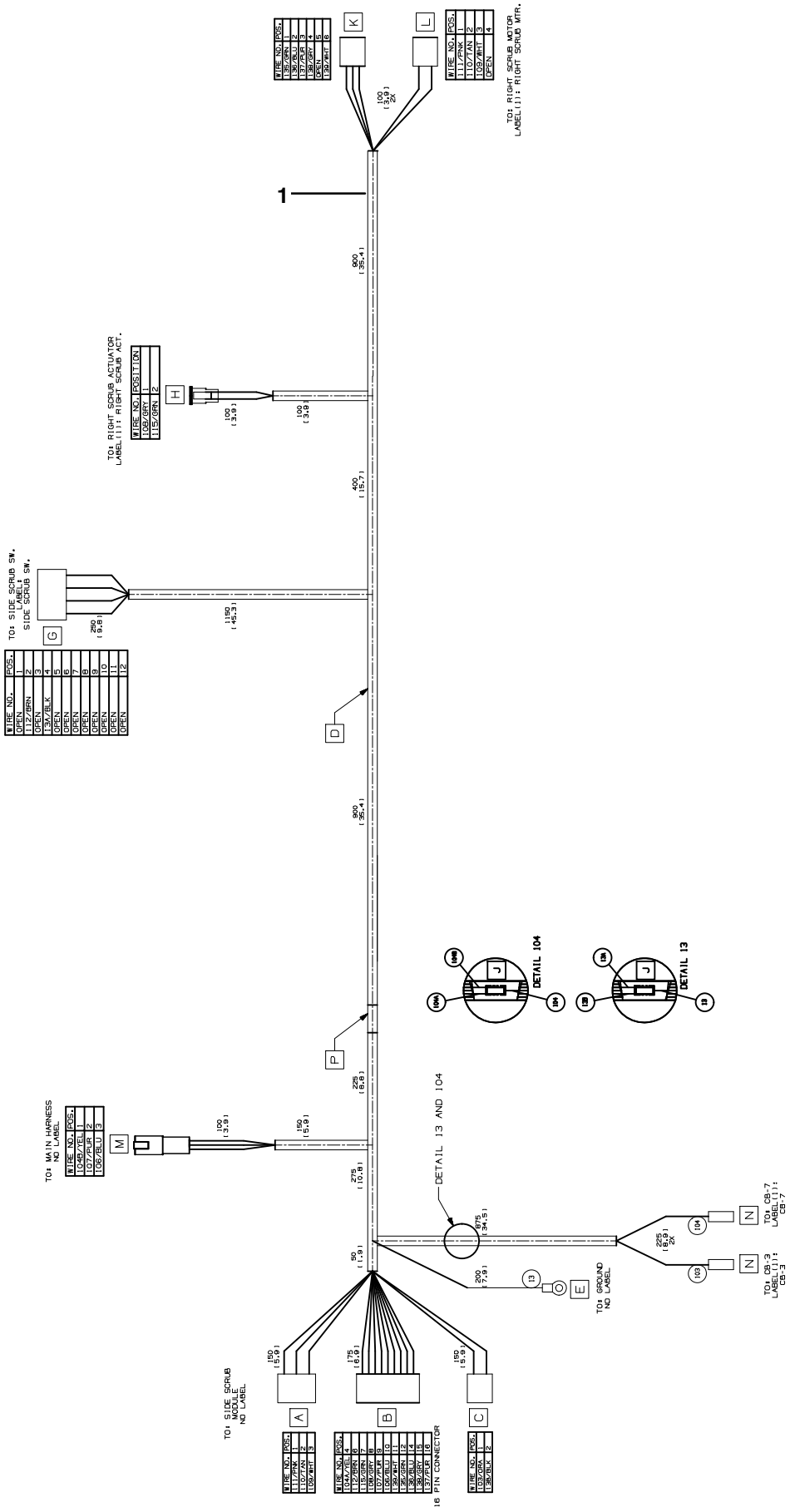

Fig. 13 – Scrubbing Side Brush Wire Harness Group

Ref.	Part No.	Serial Number	Description	Qty.
1	1072999	(0000–)	Harness, Ele [Side Scrub, T17]	1

Fig. 14 – Sweeping Side Brush Drive Motor Group, Right Side

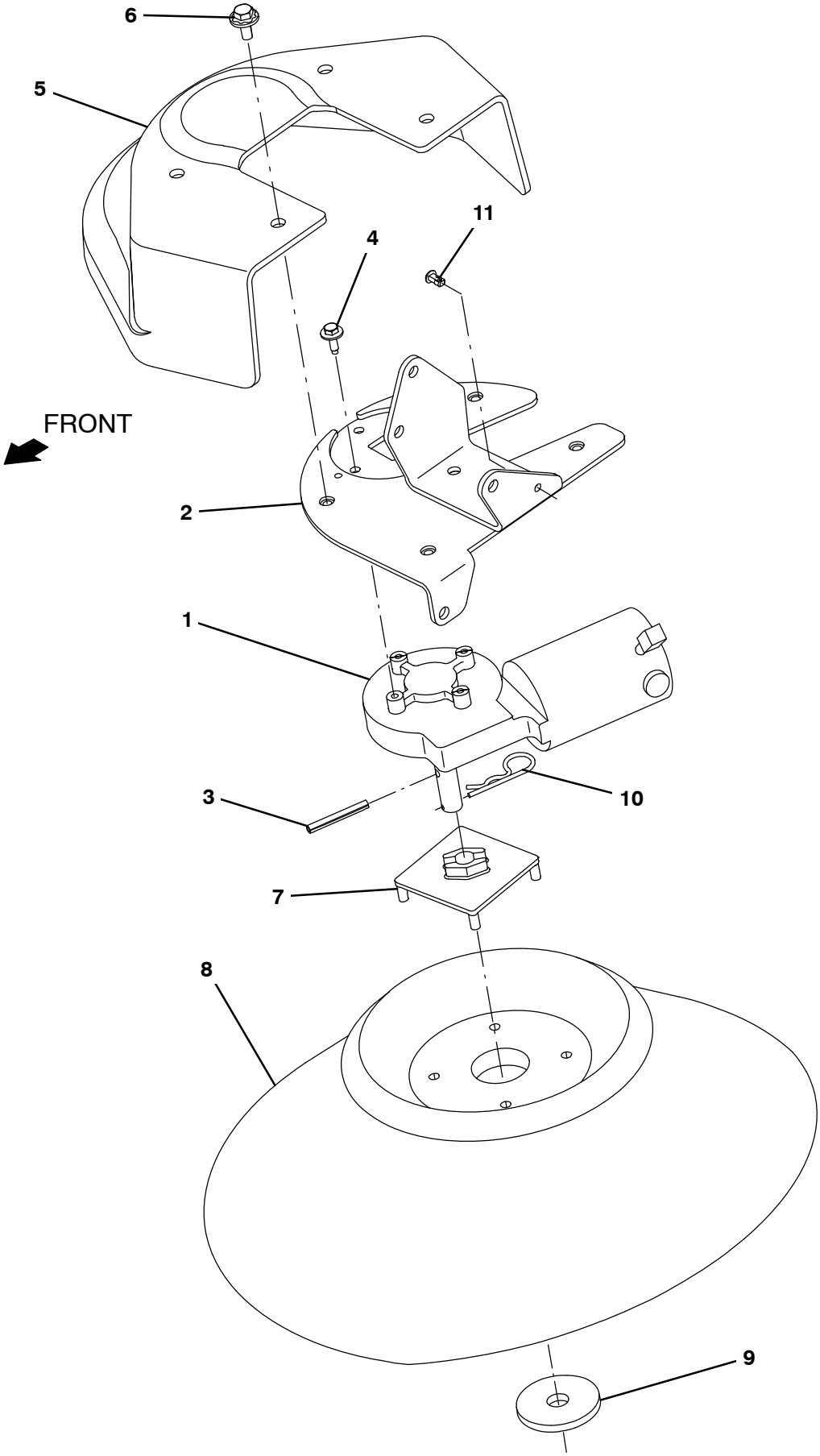

356479

Fig. 14 – Sweeping Side Brush Drive Motor Group, Right Side

Ref.	Part No.	Serial Number	Description	Qty.
1	1212824	(0000–)	Motor, Ele, 36vdc 0.08hp 0068rpm Gear Rh	1
2	1207139	(0000–)	Bracket Wldt, Mtg, Motor, Sba	1
3	11398	(0000–)	Pin, Roll, .250d X 2.00l, .250/.256	1
4	1040467	(0000–)	Screw, Hex, M6 X 1.00 X 20, 9.8, Sems	4
5	1207412	(0000–)	Cover, Sidebrush, Sweeping	1
6	1020341	(0000–)	Screw, Hex, M8 X 1.25 X 20, Ss, Sems	4
7	1017441	(0000–)	Plate, Adapter, Brush	1
8	87419	(0000–)	Brush, Disk, Swp, 19.0d, Pyp	1
9	1017802	(0000–)	Washer, Flat, 0.66b 2.50d .19, Ss	1
10	02942	(0000–)	Pin, Hair, Cotter, 0.62d .120 Wir	1
11	1071085	(0000–)	Clip, Tie, 0.25d, Plstc	1

Fig. 15 – Sweeping Side Brush Lift Group, Right Side

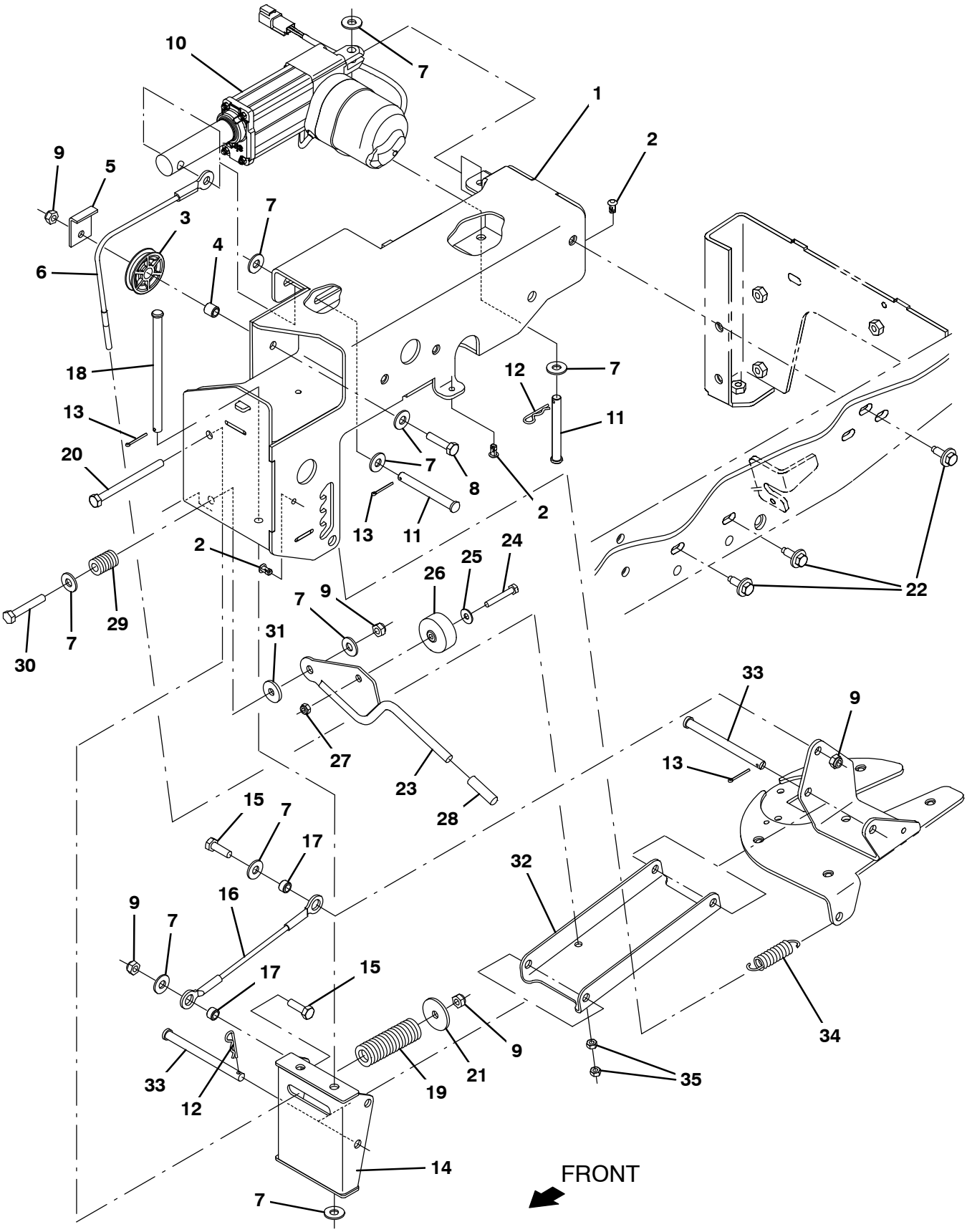

356478

Fig. 15 – Sweeping Side Brush Lift Group, Right Side

Ref.	Part No.	Serial Number	Description	Qty.
1	1207330	(0000–0399)	Housing Wldt, Sba, Rh	1
1	1225432	(0400–)	Housing Wldt, Sba, Rh	1
2	1071085	(0000–)	Clip, Tie, 0.25d, Plstc	3
3	369781	(0000–)	Pulley, Cable, 1.5d Nyl	1
4	222460	(0000–)	Sleeve, P/M, 0.32b 0.50d 0.5l [430ss]	1
5	54400	(0000–)	Bracket, Angle, Keeper, Cable	1
6	1205013	(0000–)	Cable, Ss, .09d 10.35l .38eye/M6–1.0	1
7	01685	(0000–)	Washer, Flat, 0.38b 0.88d .08, Ss	10
8	09023	(0000–)	Screw, Hex, M8 X 1.25 X 35, Fl, Ss	1
9	08713	(0000–)	Nut, Hex, Lock, M8 X 1.25, Nl, Ss	5
10	1201500	(0000–)	Actuator, 36vdc, 2.75strk, 450lb	1
11	57598	(0000–)	Pin, Clevis, 0.37d X 3.25l	2
12	44906	(0000–)	Pin, Cotter, Hair, 0.38d .093 Wir	2
13	08179	(0000–)	Pin, Cotter, .094 X 1.00	3
14	1204919	(0000–0399)	Bracket Wldt, Pivot, Sba	1
14	1225423	(0400–)	Bracket Wldt, Pivot, Sba	1
15	09010	(0000–)	Screw, Hex, M8 X 1.25 X 25, Ss	2
16	1204774	(0000–)	Cable, Ss, .09d 7.87l .50eye/.50eye	1
17	222516	(0000–)	Sleeve, P/M, 0.32b 0.50d 0.3l [430ss]	2
18	49924	(0000–)	Pin, Clevis, 0.37d X 6.12l	1
19	1209244	(0000–)	Spring, Compr, .98od 2.5l	1
20	386299	(0000–)	Screw, Hex, M8 X 1.25 X 100, Ss	1
21	379829	(0000–)	Washer, Flat, 0.34b 1.50d .12, Stl, Pl	1
22	1037346	(0000–)	Screw, Hex, M8 X 1.25 X 25, 9.8, Sems	3
23	1205016	(0000–)	Lever Wldt, Adj, Sba	1
24	33930	(0000–)	Screw, Hex, M6 X 1.00 X 40, Ss	1
25	01684	(0000–)	Washer, Flat, 0.27b 0.69d .05, Ss	1
26	01847	(0000–)	Wheel, 01.6d 0.72w 0.21b	1
27	08712	(0000–)	Nut, Hex, Lock, M6 X 1.00, Nl, Ss	1
28	1208858	(0000–)	Cover, Handle	1
29	81672	(0000–)	Spring, Cmpr, 0.37id X Flat Wir, 1.0l	1
30	49694	(0000–)	Screw, Hex, M8 X 1.25 X 50, Ss	1
31	1017218	(0000–)	Washer, Flat, 0.32b 1.00d .12, Ss	1
32	1204396	(0000–)	Bracket, Arm, Sba	1
33	59672	(0000–)	Pin, Clevis, 0.37d X 4.50l	2
34	15047	(0000–)	Spring, Extn, 0.62od 0.08wir 03.0l	1
35	07785	(0000–)	Nut, Hex, Std, M6 X 1.00, Ss	2

Fig. 16 – Sweeping Side Brush Drive Motor Group, Left Side

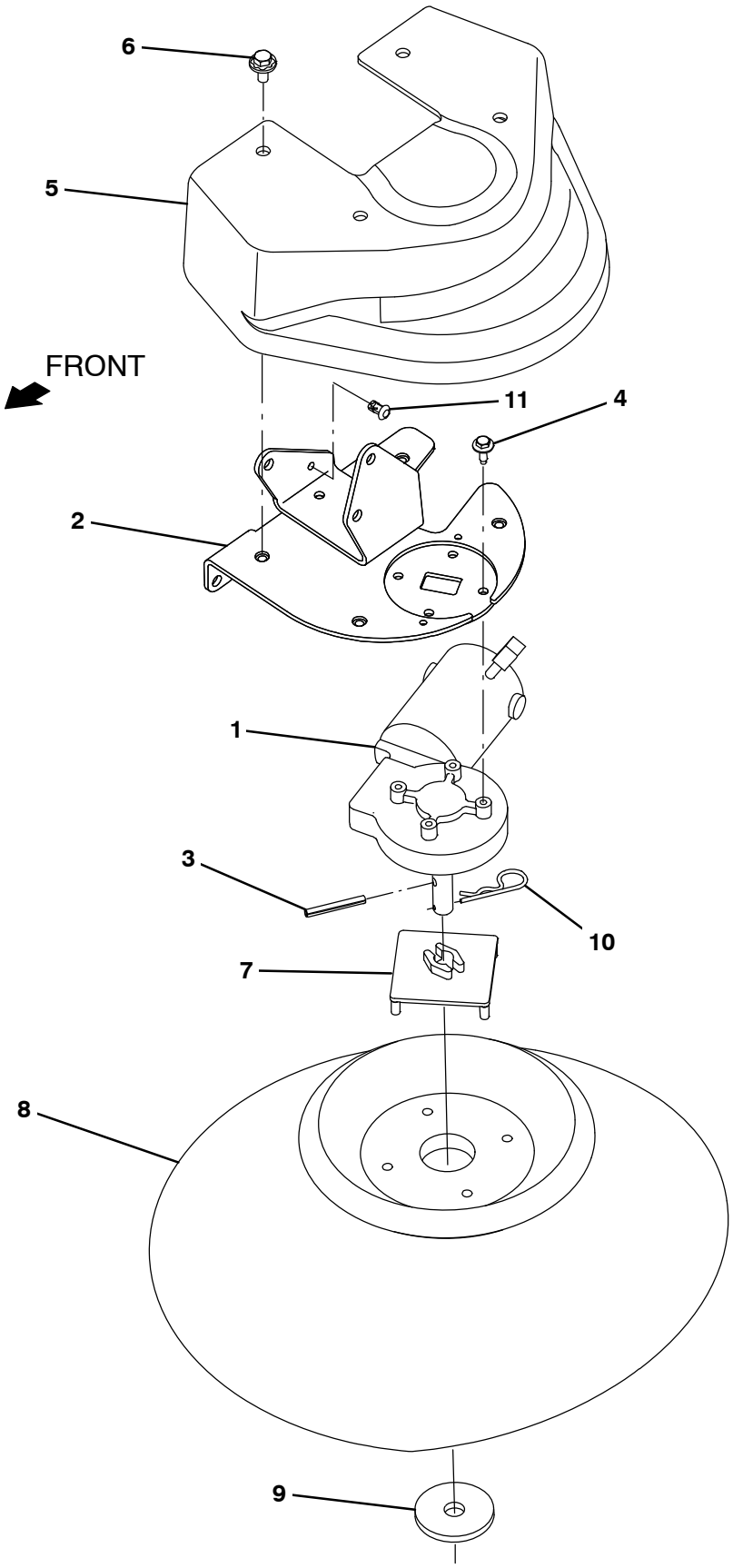

356481

Fig. 16 – Sweeping Side Brush Drive Motor Group, Left Side

Ref.	Part No.	Serial Number	Description	Qty.
1	1212823	(0000–)	Motor, Ele, 36vdc 0.08hp 0068rpm Gear Lh	1
2	1207559	(0000–)	Mount Wldt, Motor, Sba	1
3	11398	(0000–)	Pin, Roll, .250d X 2.00l, .250/.256	1
4	1040467	(0000–)	Screw, Hex, M6 X 1.00 X 20, 9.8, Sems	4
5	1207412	(0000–)	Cover, Sidebrush, Sweeping	1
6	1020341	(0000–)	Screw, Hex, M8 X 1.25 X 20, Ss, Sems	4
7	1017441	(0000–)	Plate, Adapter, Brush	1
8	87419	(0000–)	Brush, Disk, Swp, 19.0d, Pyp	1
9	1017802	(0000–)	Washer, Flat, 0.66b 2.50d .19, Ss	1
10	02942	(0000–)	Pin, Hair, Cotter, 0.62d .120 Wir	1
11	1071085	(0000–)	Clip, Tie, 0.25d, Plstc	1

Fig. 17 – Sweeping Side Brush Lift Group, Left Side

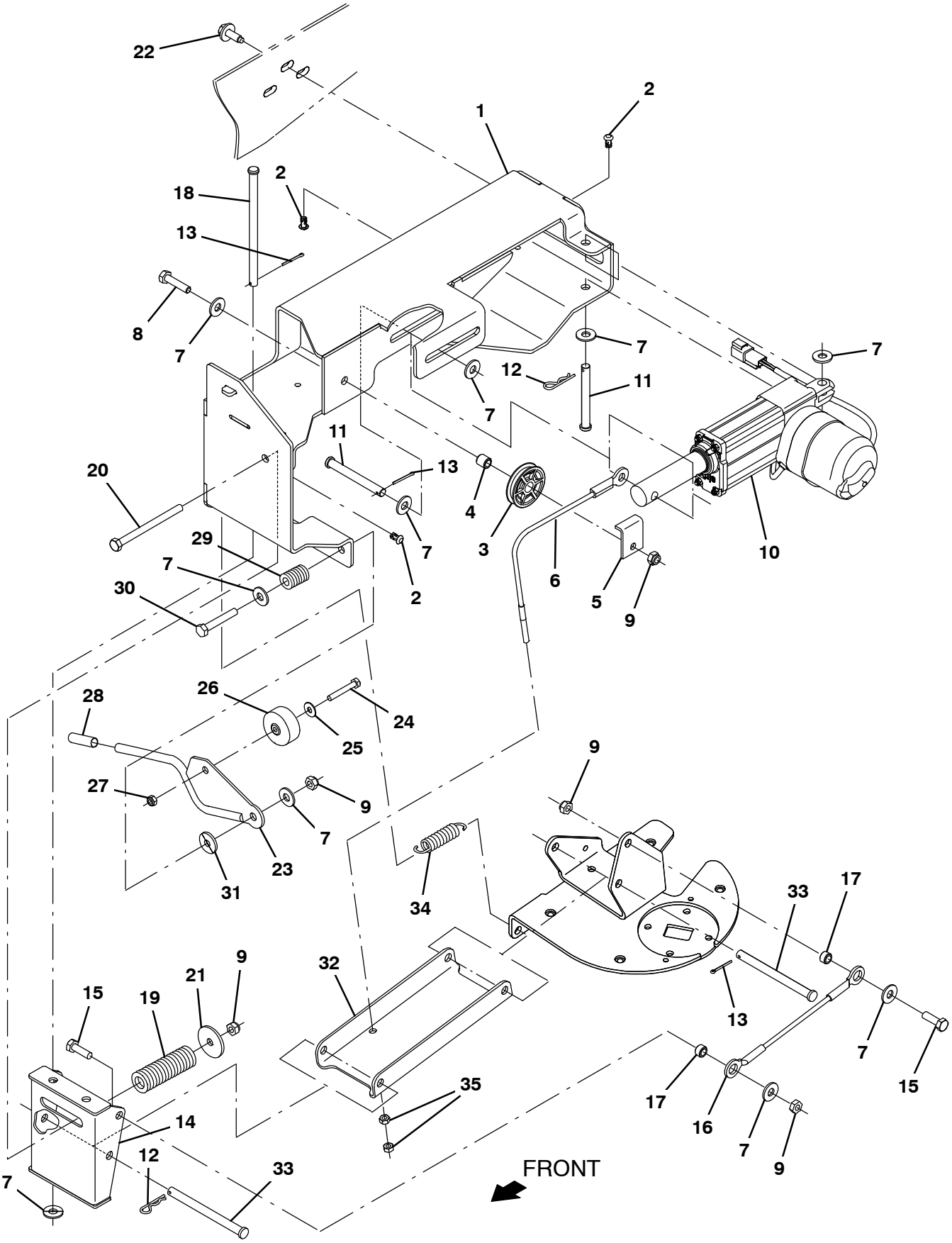

356482

Fig. 17 – Sweeping Side Brush Lift Group, Left Side

Ref.	Part No.	Serial Number	Description	Qty.
1	1207554	(0000–0399)	Housing Wldt, Sba, Lh	1
1	1225423	(0400–)	Housing Wldt, Sba, Lh	1
2	1071085	(0000–)	Clip, Tie, 0.25d, Plstc	3
3	369781	(0000–)	Pulley, Cable, 1.5d Nyl	1
4	222460	(0000–)	Sleeve, P/M, 0.32b 0.50d 0.5l [430ss]	1
5	54400	(0000–)	Bracket, Angle, Keeper, Cable	1
6	1205013	(0000–)	Cable, Ss, .09d 10.35l .38eye/M6–1.0	1
7	01685	(0000–)	Washer, Flat, 0.38b 0.88d .08, Ss	10
8	09023	(0000–)	Screw, Hex, M8 X 1.25 X 35, Fl, Ss	1
9	08713	(0000–)	Nut, Hex, Lock, M8 X 1.25, Nl, Ss	5
10	1201500	(0000–)	Actuator, 36vdc, 2.75strk, 450lb	1
11	57598	(0000–)	Pin, Clevis, 0.37d X 3.25l	2
12	44906	(0000–)	Pin, Cotter, Hair, 0.38d .093 Wir	2
13	08179	(0000–)	Pin, Cotter, .094 X 1.00	3
14	1204919	(0000–0399)	Bracket Wldt, Pivot, Sba	1
14	1225425	(0400–)	Bracket Wldt, Pivot, Sba	1
15	09010	(0000–)	Screw, Hex, M8 X 1.25 X 25, Ss	2
16	1204774	(0000–)	Cable, Ss, .09d 7.87l .50eye/.50eye	1
17	222516	(0000–)	Sleeve, P/M, 0.32b 0.50d 0.3l [430ss]	2
18	49924	(0000–)	Pin, Clevis, 0.37d X 6.12l	1
19	1209244	(0000–)	Spring, Compr, .98od 2.5l	1
20	386299	(0000–)	Screw, Hex, M8 X 1.25 X 100, Ss	1
21	379829	(0000–)	Washer, Flat, 0.34b 1.50d .12, Stl, Pl	1
22	1037346	(0000–)	Screw, Hex, M8 X 1.25 X 25, 9.8, Sems	3
23	1205016	(0000–)	Lever Wldt, Adj, Sba	1
24	33930	(0000–)	Screw, Hex, M6 X 1.00 X 40, Ss	1
25	01684	(0000–)	Washer, Flat, 0.27b 0.69d .05, Ss	1
26	01847	(0000–)	Wheel, 01.6d 0.72w 0.21b	1
27	08712	(0000–)	Nut, Hex, Lock, M6 X 1.00, Nl, Ss	1
28	1208858	(0000–)	Cover, Handle	1
29	81672	(0000–)	Spring, Cmpr, 0.37id X Flat Wir, 1.0l	1
30	49694	(0000–)	Screw, Hex, M8 X 1.25 X 50, Ss	1
31	1017218	(0000–)	Washer, Flat, 0.32b 1.00d .12, Ss	1
32	1204396	(0000–)	Bracket, Arm, Sba	1
33	59672	(0000–)	Pin, Clevis, 0.37d X 4.50l	2
34	15047	(0000–)	Spring, Extn, 0.62od 0.08wir 03.0l	1
35	07785	(0000–)	Nut, Hex, Std, M6 X 1.00, Ss	2

Fig. 18 – Sweeping Side Brush Electrical Group

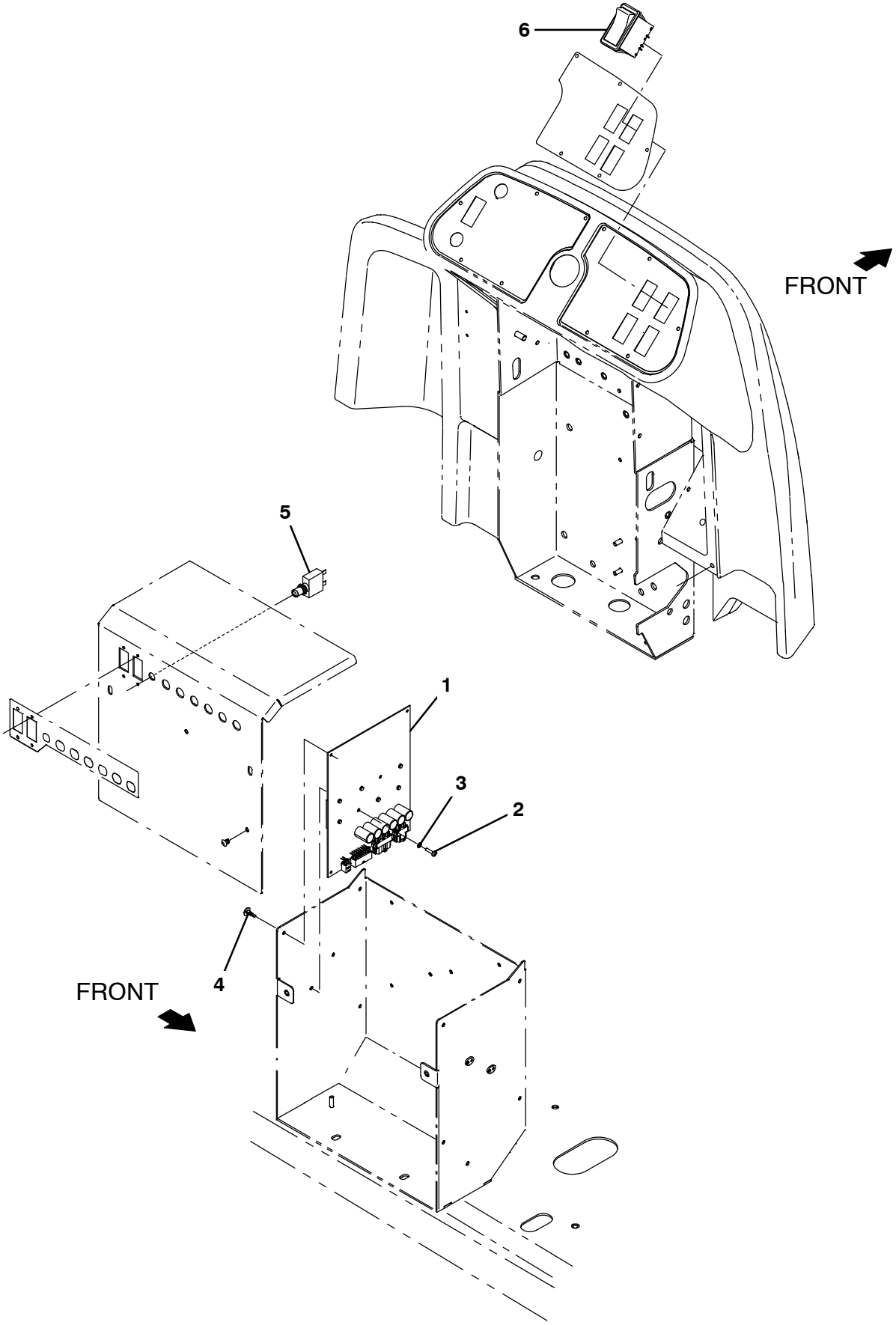

356480

Fig. 18 – Sweeping Side Brush Electrical Group

Ref.	Part No.	Serial Number	Description	Qty.
1	9020229	(0000–)	Circuit Board Kit, H20, Afmkt [T17]	1
2	06926	(0000–)	Screw, Pan, Phl, M4 X 0.70 X 10, 4.8	2
3	1202860	(0000–)	Washer, Flat, 0.17b 0.31d .03, Nyl	2
4	1210399	(0000–)	Stand–Off, Circuitboard [0.25”]	4
5	383723	(0000–)	Circuitbreaker, 20.0a, Resetable	1
6	397889	(0000–)	Switch, Rocker, Dpst, On / None / On	1

Fig. 19 – Sweeping Side Brush Wire Harness Group

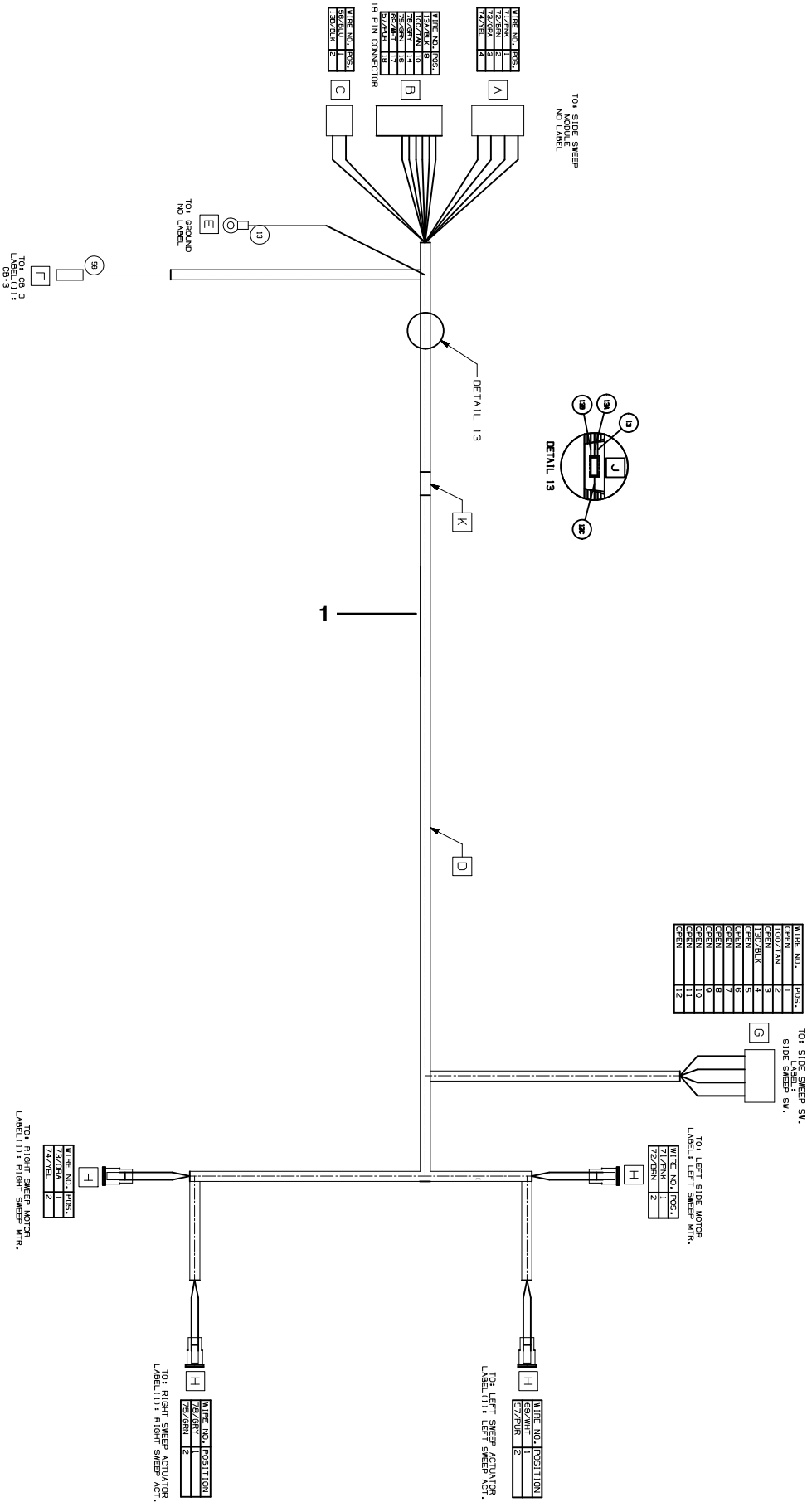

Fig. 19 – Sweeping Side Brush Wire Harness Group

Ref.	Part No.	Serial Number	Description	Qty.
1	1072992	(0000–)	Harness, Ele , [Side Sweep, T17]	1

Fig. 20 – Pre–Sweep Hopper Cover Group

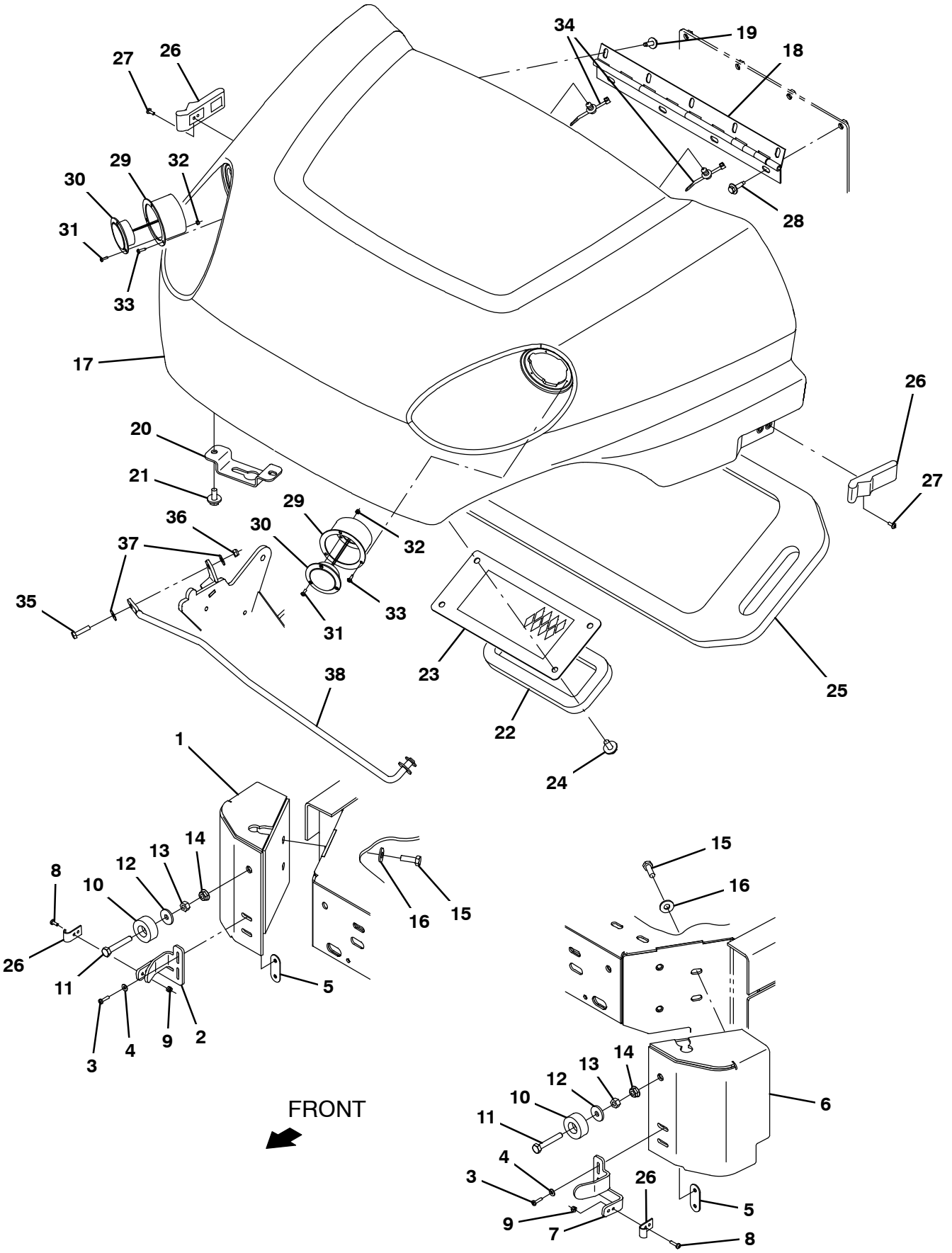

356465

Fig. 20 – Pre–Sweep Hopper Cover Group

	Ref.	Part No.	Serial Number	Description	Qty.
	1	1209119	(0000–)	Bracket Wldt, Corner, Rh	1
	2	1207119	(0000–)	Bracket, Latch, Rh	1
	3	06927	(0000–)	Screw, Pan, Phl, M4 X 0.70 X 16, 4.8	4
	4	19065	(0000–)	Washer, Flat, 0.19b 0.44d .05, Pl, 08	8
	5	1211929	(0000–)	Plate Wldt, Nut, M4	2
	6	1209140	(0000–)	Bracket Wldt, Corner, Lh	1
	7	1207123	(0000–)	Bracket, Latch, Lh	1
	8	06927	(0000–)	Screw, Pan, Phl, M4 X 0.70 X 16, 4.8	4
	9	02850	(0000–)	Nut, Hex, Lock, M4 X 0.70, Nl	4
	10	364614	(0000–)	Bumper, Rbr, 1.5d 0.63 0.31h	2
	11	33401	(0000–)	Screw, Hex, M8 X 1.25 X 50, Fl, Ss	2
	12	1017218	(0000–)	Washer, Flat, 0.32b 1.00d .12, Ss	2
	13	07786	(0000–)	Nut, Hex, Std, M8 X 1.25, Ss	2
	14	07791	(0000–)	Nut, Hex, Flng, M8 X 1.25	2
	15	09010	(0000–)	Screw, Hex, M8 X 1.25 X 25, Ss	4
	16	01686	(0000–)	Washer, Flat, 0.44b 1.00d .08, Ss	4
▽		9020220	(0000–)	Cover, Preswp, Afmkt [T17]	1
▲	17	1207151	(0000–)	Cover, Presweep (As Trimmed) [T17]	1
▲	18	603268	(0000–)	Hinge, .25pin .07 2.5w 16.0l, Pl	1
▲	19	1040467	(0000–)	Screw, Hex, M6 X 1.00 X 20, 9.8, Sems	5
▲	20	1207041	(0000–)	Bracket, Catch, Cover, Saftey Rod	1
▲	21	1020341	(0000–)	Screw, Hex, M8 X 1.25 X 20, Ss, Sems	2
▲	22	1058477	(0000–)	Gasket, .75, 03.94w 08.58l, Adh[Nitrile]	1
▲	23	1058451	(0000–)	Plate Wldt, Screen, Hppr	1
▲	24	1020341	(0000–)	Screw, Hex, M8 X 1.25 X 20, Ss, Sems	4
▲	25	1058901	(0000–)	Gasket, Box, Filter	1
▲	26	49800	(0000–)	Latch W/ Keeper	2
▲	27	49697	(0000–)	Screw, Pan, Phl, M4 X 0.70 X 10, Ss	4
▲	28	1036892	(0000–)	Screw, Hex, M6 X 1.00 X 25, 9.8, Sems	4
▲	29	1060784	(0000–)	Bracket Wldt, Mtg, Headlight	2
▲	30	9008182	(0000–)	Light Assy, Pre–Sweep, Afmkt	2
▲	31	06920	(0000–)	Screw, Pan, Phl, M3 X 0.50 X 10, 4.8	6
▲	32	579211	(0000–)	Nut, Hex, Lock, M3 X 0.50, Nl, Ss	6
▲	33	222267	(0000–)	Screw, Pan, Phl, 06–20 X 0.50, Fmg/Ab	6
▲	34	1210807	(0000–)	Wire, Tie [W/.25” Fir Tree Clip]	3
	35	09007	(0000–)	Screw, Hex, M6 X 1.00 X 25, Ss	1
	36	08708	(0000–)	Nut, Hex, Lock, M6 X 1.00, Nl	1
	37	01684	(0000–)	Washer, Flat, 0.27b 0.69d .05, Ss	2
	38	1208394	(0000–)	Rod Wldt, Safety, Hopper Cover	1

Fig. 21 – Pre–Sweep Hopper and Vacuum Fan Group

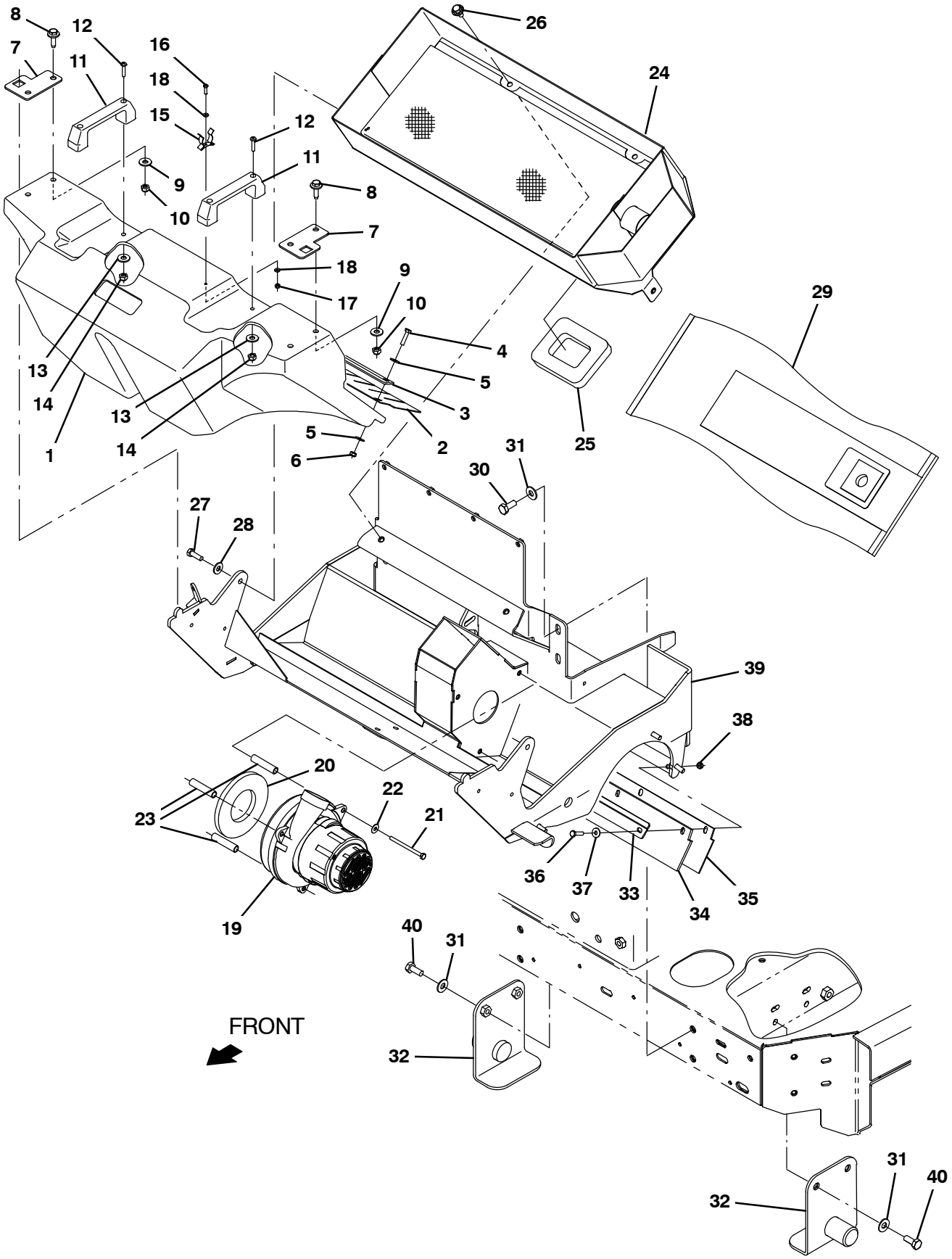

356466

Fig. 21 – Pre–Sweep Hopper and Vacuum Fan Group

	Ref.	Part No.	Serial Number	Description	Qty.
▽		9020219	(0000–)	Hopper, Preswp, Afmkt [T17]	1
▲	1	1207550	(0000–)	Hopper, Pre–Sweep, Rm–Cptl, Trimmed	1
▲▽		9020255	(0000–)	Skirt Kit, Hopper, Preswp, Afmkt [T17]	1
▲▲	2	1205547	(0000–)	Skirt, Neo, .06, 04.88w 28.26l 05/Sl	1
▲▲	3	1205550	(0000–)	Plate, Retainer, Skirt	1
▲▲	4	09007	(0000–)	Screw, Hex, M6 X 1.00 X 25, Ss	5
▲▲	5	01684	(0000–)	Washer, Flat, 0.27b 0.69d .05, Ss	10
▲▲	6	08712	(0000–)	Nut, Hex, Lock, M6 X 1.00, Nl, Ss	5
▲	7	1205619	(0000–)	Angle, Mtg, Hopper	2
▲	8	1037354	(0000–)	Screw, Hex, M8 X 1.25 X 30, 9.8, Sems	4
▲	9	32491	(0000–)	Washer, Flat, 0.31, Std	4
▲	10	08709	(0000–)	Nut, Hex, Lock, M8 X 1.25, Nl	4
▲	11	1023920	(0000–)	Handle, Door	2
▲	12	06935	(0000–)	Screw, Pan, Phl, M5 X 0.80 X 25, 4.8	4
▲	13	41178	(0000–)	Washer, Flat, 0.25, Fendr	4
▲	14	06549	(0000–)	Nut, Hex, Lock, M5 X 0.80, Nl	4
▲	15	23446	(0000–)	Clip, Grip, Finger, 0.31–0.75d, Nk Pl	1
▲	16	06927	(0000–)	Screw, Pan, Phl, M4 X 0.70 X 16, 4.8	1
▲	17	02850	(0000–)	Nut, Hex, Lock, M4 X 0.70, Nl	1
▲	18	19064	(0000–)	Washer, Flat, 0.16b 0.38d .05, Pl, 06	2
▽		9020256	(0000–)	Vac Fan Kit, W/Seal [T17]	1
▲▽	19	1200149	(0000–)	Fan, Vacuum, 6.6d, 036vdc, 1 Stage [Bpt]	1
▲▲		1206774	(0000–)	Brush Kit, Motor, Fan	1
▲	20	10912	(0000–)	Seal, Rbr, Clsd, 0.375, 5.0d 2.5h	1
▲	21	391434	(0000–)	Screw, Hex, M6 X 1.00 X 80, Ss	3
▲	22	01684	(0000–)	Washer, Flat, 0.27b 0.69d .05, Ss	3
▲	23	81719	(0000–)	Tube, 0.38id 0.50od 02.2l, Stl, Pl	3
	24	1204954	(0000–)	Filterbox Wldt, Presweep	1
	25	1058695	(0000–)	Gasket, .75, 03.94w 04.92l, Adh[Nitrile]	1
	26	1020341	(0000–)	Screw, Hex, M8 X 1.25 X 20, Ss, Sems	2
	27	09010	(0000–)	Screw, Hex, M8 X 1.25 X 25, Ss	2
	28	01685	(0000–)	Washer, Flat, 0.38b 0.88d .08, Ss	2
	29	1067452	(0000–)	Bag, Vacuum, Paper [1pick=1pkg(=10pc)]	1
	30	09028	(0000–)	Screw, Hex, M10 X 1.50 X 25, Ss	4
	31	01686	(0000–)	Washer, Flat, 0.44b 1.00d .08, Ss	8
	32	1205593	(0000–)	Bracket Wldt, Mount	2
	33	1205550	(0000–)	Plate, Retainer, Skirt	1
	34	1207269	(0000–)	Skirt, Neo, .19, 03.62w 28.12l 05/Sl	1
	35	1207484	(0000–)	Skirt, Neo, .06, 03.62w 28.12l 05/Sl	1
	36	09007	(0000–)	Screw, Hex, M6 X 1.00 X 25, Ss	5
	37	01684	(0000–)	Washer, Flat, 0.27b 0.69d .05, Ss	5
	38	08712	(0000–)	Nut, Hex, Lock, M6 X 1.00, Nl, Ss	5
	39	1205402	(0000–)	Frame Wldt, Brush, Pre–Sweep	1
	40	12317	(0000–)	Screw, Hex, M10 X 1.50 X 30, Ss	4

Fig. 22 – Pre–Sweep Brush Drive Group

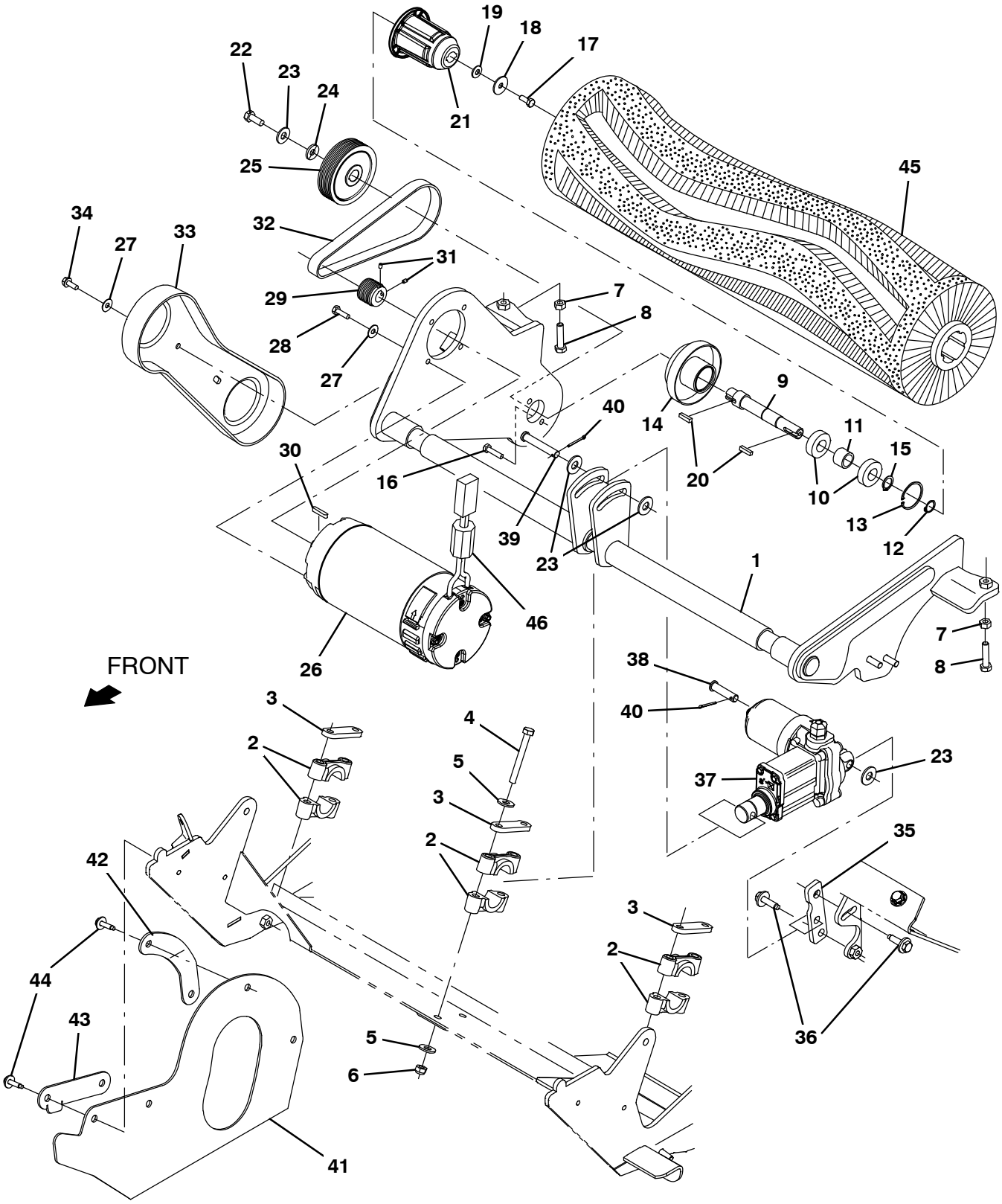

356467

Fig. 22 – Pre–Sweep Brush Drive Group

Ref.	Part No.	Serial Number	Description	Qty.
1	1205565	(0000–)	Arm Wldt, Brush	1
2	381502	(0000–)	Bearing, Split, 1.00b	6
3	382224	(0000–)	Plate, Sppt	3
4	09767	(0000–)	Screw, Hex, M8 X 1.25 X 70, Ss	6
5	32491	(0000–)	Washer, Flat, 0.31, Std	12
6	08713	(0000–)	Nut, Hex, Lock, M8 X 1.25, Nl, Ss	6
7	07786	(0000–)	Nut, Hex, Std, M8 X 1.25, Ss	2
8	09023	(0000–)	Screw, Hex, M8 X 1.25 X 35, Fl, Ss	2
9	1211399	(0000–)	Shaft, Drive, Pre–Sweep, Lrg Brg	1
10	28010	(0000–)	Bearing, Ball, 0.62b 1.38d 0.43w	2
11	1055051	(0000–)	Spacer, Brg	1
12	01516	(0000–)	Ring, Retaining, Ext, 0.59d, Basic	1
13	18136	(0000–)	Ring, Retaining, Ext, 0.62d, Basic	1
14	1063363	(0000–)	Housing Wldt, Brg, Pre–Sweep	1
15	01513	(0000–)	Ring, Retaining, Int,	1
16	09007	(0000–)	Screw, Hex, M6 X 1.00 X 25, Ss	2
17	11329	(0000–)	Screw, Hex, M6 X 1.00 X 16, Nl, Ss	1
18	397779	(0000–)	Washer, Flat, 0.28b 1.00d .06, Stl, Blk	1
19	41185	(0000–)	Washer, Flat, Belleville, .25	1
20	00911	(0000–)	Key, Sq, 0.19 X 0.19, 0.75l	2
21	12269	(0000–)	Plug, Drive, Brush, Nyl	1
22	09740	(0000–)	Screw, Hex, M8 X 1.25 X 20, Ss	1
23	01686	(0000–)	Washer, Flat, 0.44b 1.00d .08, Ss	4
24	41186	(0000–)	Washer, Flat, Belleville, .31	1
25	1054591	(0000–)	Sheave, 07grv, 03.3pd 0.63b [Pj]	1
26	1053342	(0000–)	Motor, Ele, 36vdc 1750rpm 1.00hp 22.0a	1
27	01684	(0000–)	Washer, Flat, 0.27b 0.69d .05, Ss	6
28	08716	(0000–)	Screw, Hex, M6 X 1.00 X 20, Ss	4
29	1054581	(0000–)	Sheave, 07grv, 1.22pd 0.55b [Pj]	1
30	1014328	(0000–)	Key, Sq, 05mm X 05mm, 25mml	1
31	222818	(0000–)	Screw, Set, Soc, 08–32 X 0.25, Nl	2
32	9020257	(0000–)	Belt Kit, Preswp, Afmkt [T17]	1
33	1059308	(0000–)	Cover, Belt, Pre–Sweep	1
34	361339	(0000–)	Screw, Hex, M6 X 1.00 X 16, Fmg	2
35	1209802	(0000–)	Bracket Wldt, Adj, Actuator	1
36	1037354	(0000–)	Screw, Hex, M8 X 1.25 X 30, 9.8, Sems	2
37	1208772	(0000–)	Actuator, 36vdc, 2.08strk, 500lbs	1
38	1009356	(0000–)	Pin, Clevis, 10mmd X 040mml	1
39	222260	(0000–)	Pin, Clevis, 0.37d X 2.25l	1
40	08170	(0000–)	Pin, Cotter, .062 X 0.50	2
41	1207488	(0000–)	Skirt, Rbr, .12, 09.11w 16.61l, 05/Hole	1
42	1207486	(0000–)	Plate, Retainer, Skirt, Rh, Curved	1
43	1207487	(0000–)	Plate, Retainer, Skirt, Rh, Straight	1
44	1036892	(0000–)	Screw, Hex, M6 X 1.00 X 25, 9.8, Sems	4
45	1211934	(0000–)	Brush, Swp, 28l, Wedge, Pyp, Spl	1
46	1052126	(0000–)	Inductor, 12.7Mm [156 Imp At 25Mhz]	1

Fig. 23 – Pre–Sweep Brush Idler Group

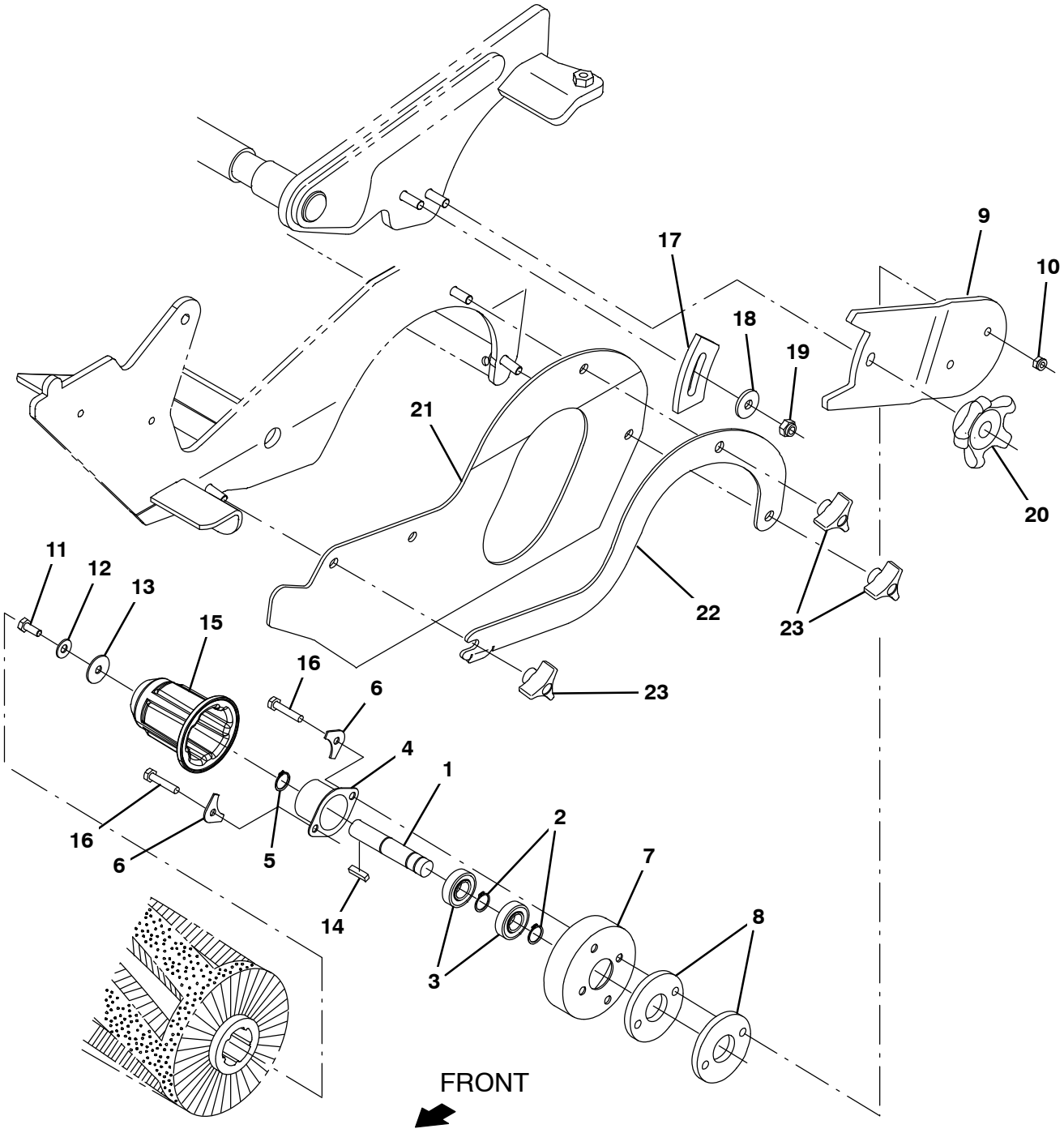

356468

Fig. 23 – Pre–Sweep Brush Idler Group

	Ref.	Part No.	Serial Number	Description	Qty.
▽		48749	(0000–)	Bearing Assy, W/Shaft	1
▲	1	15522	(0000–)	Shaft, Idler, Brush, Main	1
▲	2	01516	(0000–)	Ring, Retaining, Ext, 0.59d, Basic	2
▲	3	41360	(0000–)	Bearing, Ball, 0.59b 1.26d 0.35w[2seal]	2
▲	4	41362	(0000–)	Housing, Flng, Brg	1
▲	5	86773	(0000–)	Ring, Retaining, Ext, 0.59d, Basic	1
	6	32408	(0000–)	Plate, Hold–Down	2
	7	32720	(0000–)	Shield, Plug, Drive	1
	8	392215	(0000–)	Spacer, Arm, Brush	2
	9	1056189	(0000–)	Arm, Brush, Pre–Sweep, Idler, Lh	1
	10	08708	(0000–)	Nut, Hex, Lock, M6 X 1.00, Nl	2
	11	11329	(0000–)	Screw, Hex, M6 X 1.00 X 16, Nl, Ss	1
	12	41185	(0000–)	Washer, Flat, Belleville, .25	1
	13	397779	(0000–)	Washer, Flat, 0.28b 1.00d .06, Stl, Blk	1
	14	00911	(0000–)	Key, Sq, 0.19 X 0.19, 0.75l	1
	15	12269	(0000–)	Plug, Drive, Brush, Nyl	1
	16	1040803	(0000–)	Screw, Hex, M6 X 1.00 X 30mm, Ss	2
	17	81884	(0000–)	Plate, Arm, Adj	1
	18	1017218	(0000–)	Washer, Flat, 0.32b 1.00d .12, Ss	1
	19	08713	(0000–)	Nut, Hex, Lock, M8 X 1.25, Nl, Ss	1
	20	1054948	(0000–)	Knob Assy, Star, 3.21d 5ear M8	1
	21	1207488	(0000–)	Skirt, Rbr, .12, 09.11w 16.61l, 05/Hole	1
	22	1207485	(0000–)	Plate, Retainer, Skirt, Lh	1
	23	222470	(0000–)	Knob, Star, 1.50d 0.88l 3ear M8x1.25 Fem	3

Fig. 24 – Pre–Sweep Side Brush Group

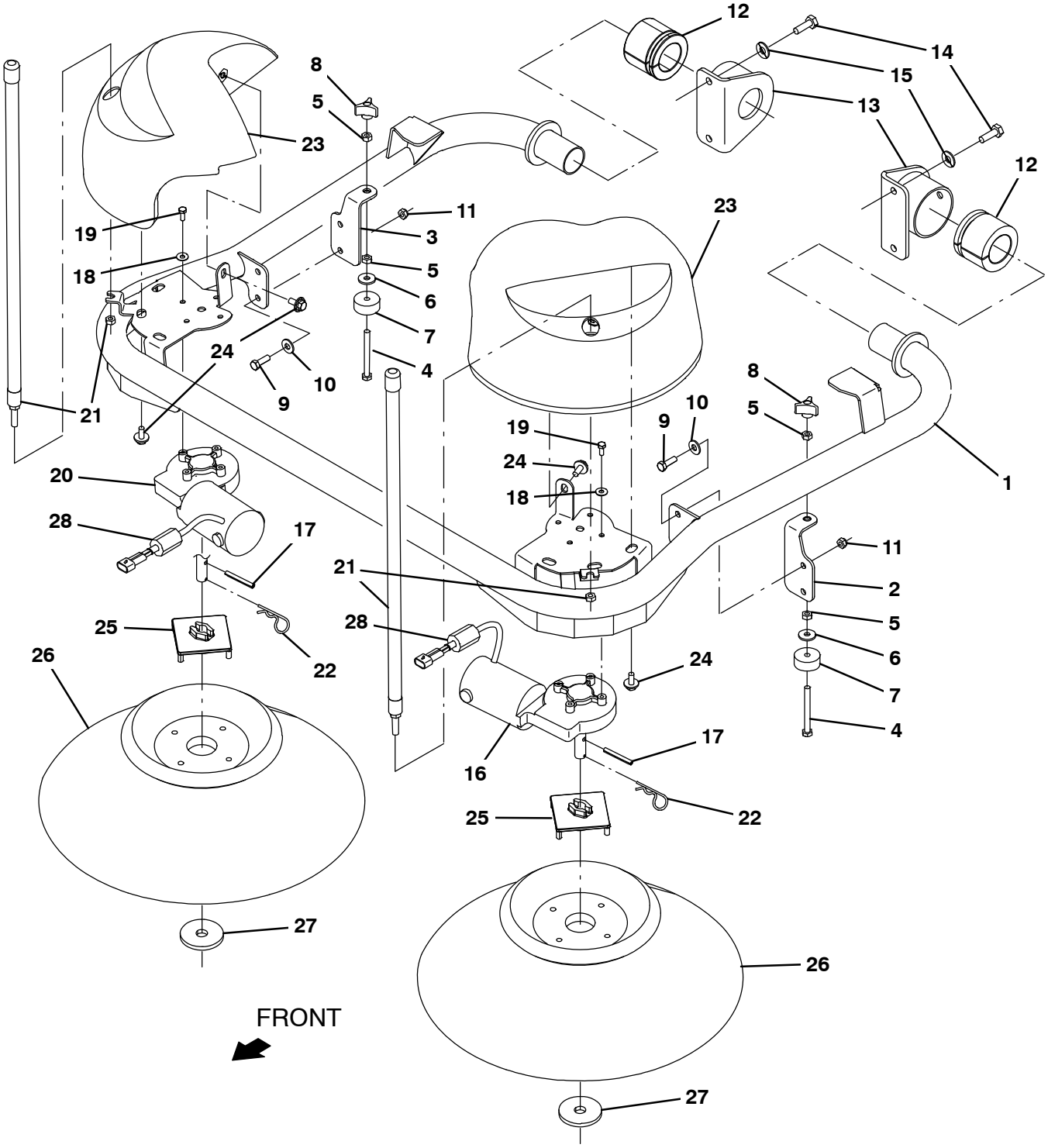

356469

Fig. 24 – Pre–Sweep Side Brush Group

Ref.	Part No.	Serial Number	Description	Qty.
1	1205449	(0000–)	Tube Wldt, Arm, Brush, Side	1
2	1207045	(0000–)	Bracket Wldt, Brush, Adj, Lh	1
3	1207047	(0000–)	Bracket Wldt, Brush, Adj, Rh	1
4	1060394	(0000–)	Screw, Hex, M8 X 1.25 X 80, Fl, Ss	2
5	07786	(0000–)	Nut, Hex, Std, M8 X 1.25, Ss	4
6	1017218	(0000–)	Washer, Flat, 0.32b 1.00d .12, Ss	2
7	364614	(0000–)	Bumper, Rbr, 1.5d 0.63 0.31h	2
8	222470	(0000–)	Knob, Star, 1.50d 0.88l 3ear M8x1.25 Fem	2
9	09010	(0000–)	Screw, Hex, M8 X 1.25 X 25, Ss	4
10	01685	(0000–)	Washer, Flat, 0.38b 0.88d .08, Ss	4
11	08713	(0000–)	Nut, Hex, Lock, M8 X 1.25, Nl, Ss	4
12	1053815	(0000–)	Bushing, Flex, Ure	2
13	1060210	(0000–)	Housing Wldt, Pivot	2
14	12317	(0000–)	Screw, Hex, M10 X 1.50 X 30, Ss	4
15	01686	(0000–)	Washer, Flat, 0.44b 1.00d .08, Ss	4
16	1212823	(0000–)	Motor, Ele, 36vdc 0.08hp 0068rpm Gear Lh	1
17	11398	(0000–)	Pin, Roll, .250d X 2.00l, .250/.256	2
18	01684	(0000–)	Washer, Flat, 0.27b 0.69d .05, Ss	8
19	11329	(0000–)	Screw, Hex, M6 X 1.00 X 16, Nl, Ss	8
20	1212824	(0000–)	Motor, Ele, 36vdc 0.08hp 0068rpm Gear Rh	1
21	1211837	(0000–)	Marker, Corner	2
22	02942	(0000–)	Pin, Hair, Cotter, 0.62d .120 Wir	2
23	9020221	(0000–)	Cover, Motor, Preswp, Afmkt [T17]	2
24	1020341	(0000–)	Screw, Hex, M8 X 1.25 X 20, Ss, Sems	8
25	1017441	(0000–)	Plate, Adapter, Brush	2
26	87419	(0000–)	Brush, Disk, Swp, 19.0d, Pyp	2
27	1017802	(0000–)	Washer, Flat, 0.66b 2.50d .19, Ss	2
28	1213802	(0000–)	Inductor, Ferrite [spit Case, 220@100Hz]	2

Fig. 25 – Pre–Sweep Electrical Group

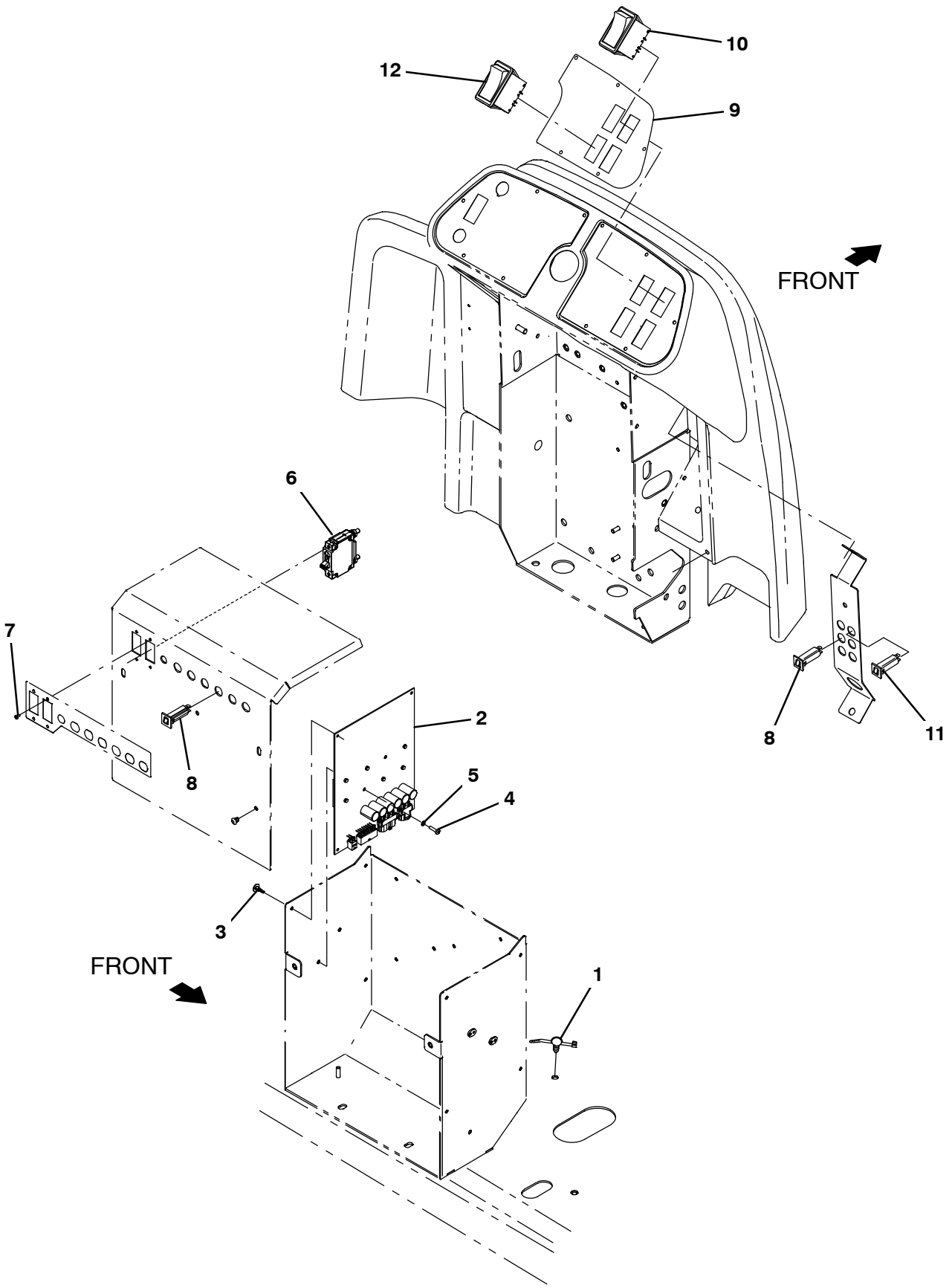

356470

Fig. 25 – Pre–Sweep Electrical Group

Ref.	Part No.	Serial Number	Description	Qty.
1	1210807	(0000–)	Wire, Tie [W/.25” Fir Tree Clip]	6
2	9020229	(0000–)	Circuit Board Kit, H2o, Afmkt [T17]	1
3	1210399	(0000–)	Stand–Off, Circuitboard [0.25”]	4
4	06926	(0000–)	Screw, Pan, Phl, M4 X 0.70 X 10, 4.8	2
5	1202860	(0000–)	Washer, Flat, 0.17b 0.31d .03, Nyl	2
6	1210969	(0000–)	Circuitbreaker, 50.0a, Resetable	1
7	06919	(0000–)	Screw, Pan, Phl, M3 X 0.50 X 6, 4.8	2
8	1064184	(0000–)	Circuitbreaker, 02.5a, Resetable	2
9	1208217	(0000–)	Label, Opertnl, Console, Rh, W/Pre–Sweep	1
10	1207284	(0000–)	Switch, Rocker [Mom,Off,Mom, Dual Led]	1
11	1064188	(0000–)	Circuitbreaker, 15.0a, Resetable	1
12	377084	(0000–)	Switch, Rocker, Prgrsv	1

Fig. 26 – Pre–Sweep Wire Harnesses Group

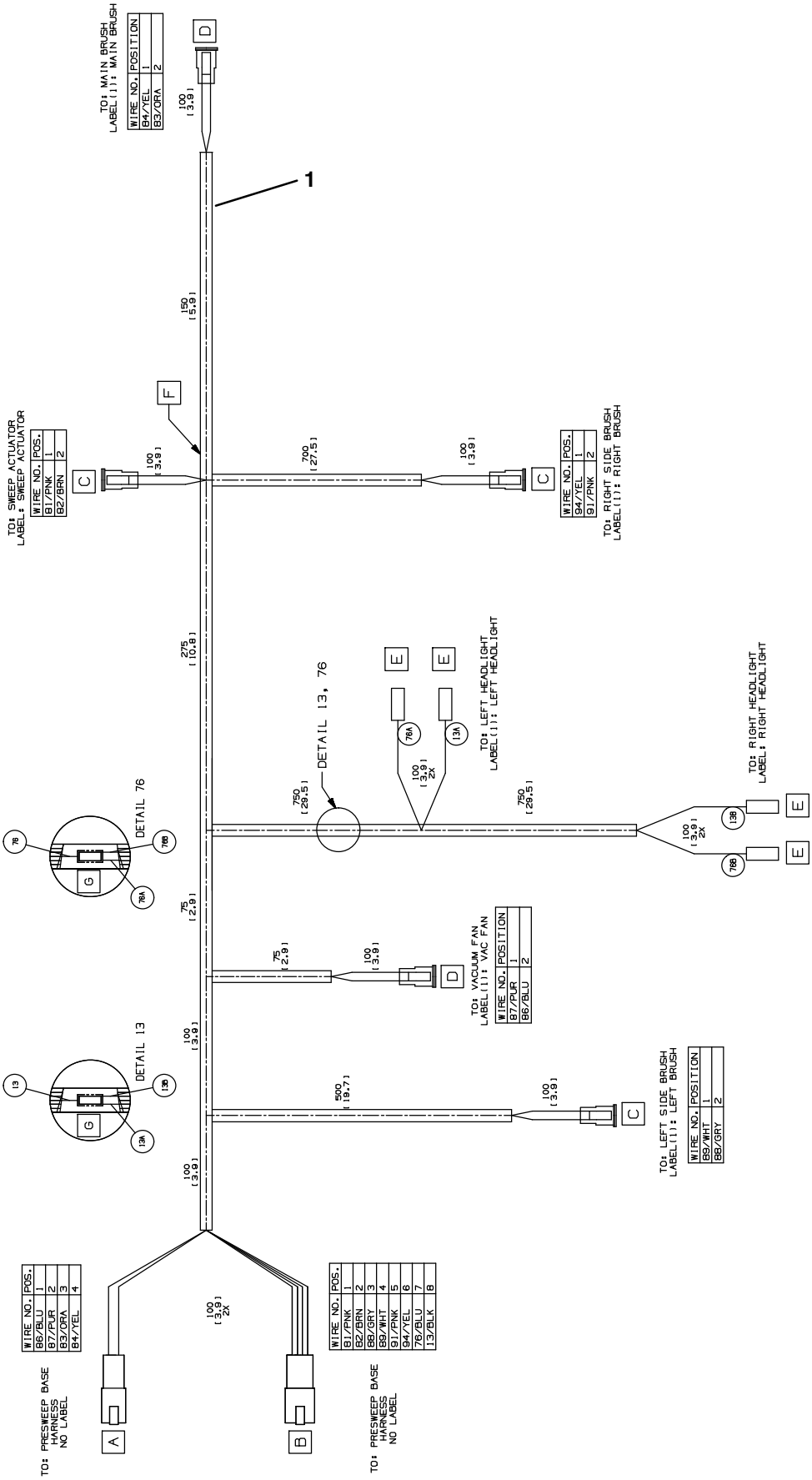

Fig. 26 – Pre–Sweep Wire Harnesses Group

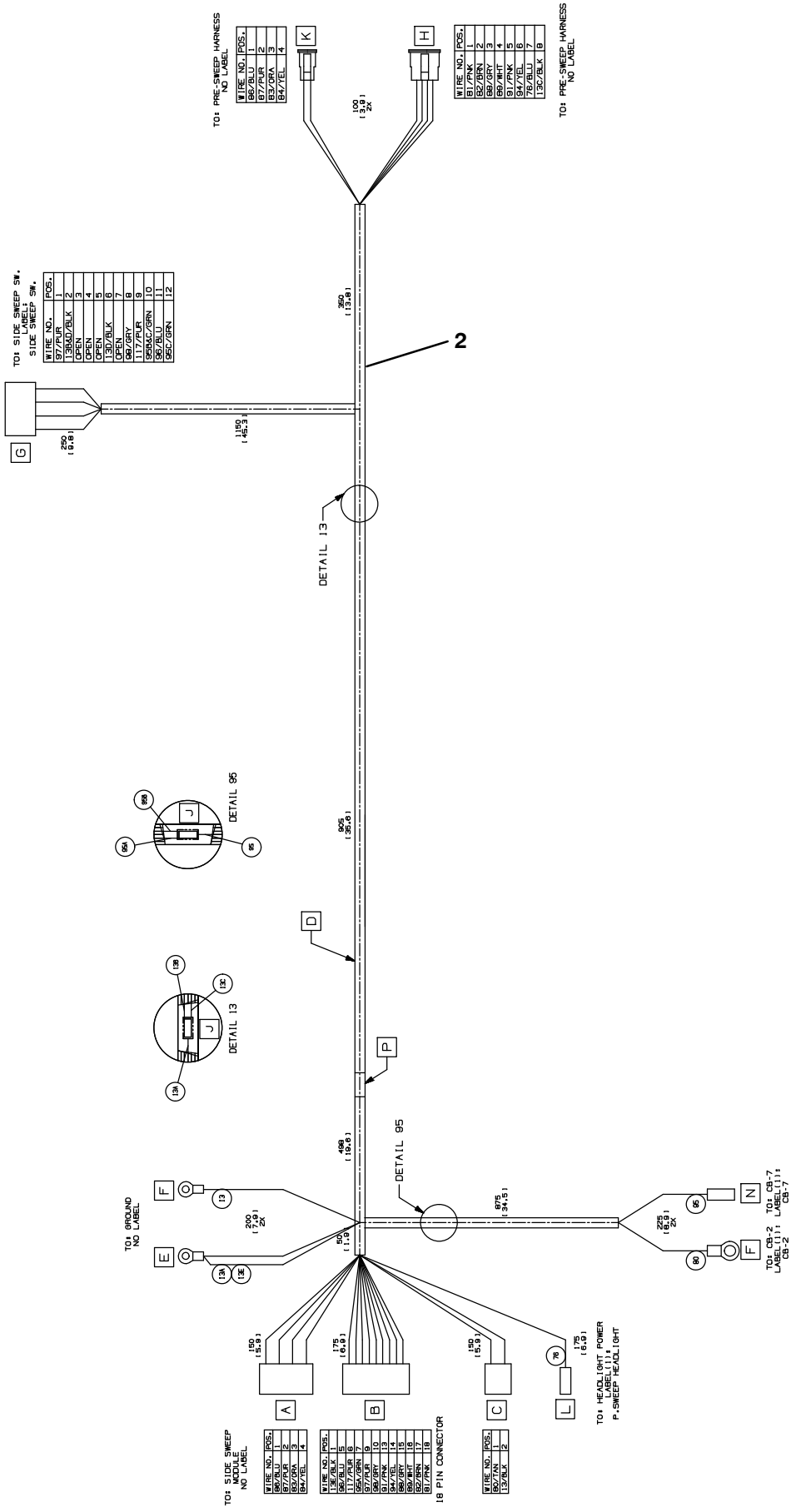

Fig. 26 – Pre–Sweep Wire Harnesses Group

Ref.	Part No.	Serial Number	Description	Qty.
1	1073054	(0000–)	Harness, Ele [Presweep, Head, T17]	1
2	1073042	(0000–)	Harness, Ele [Presweep, Base, T17]	1

Fig. 27 – Auto Fill Group

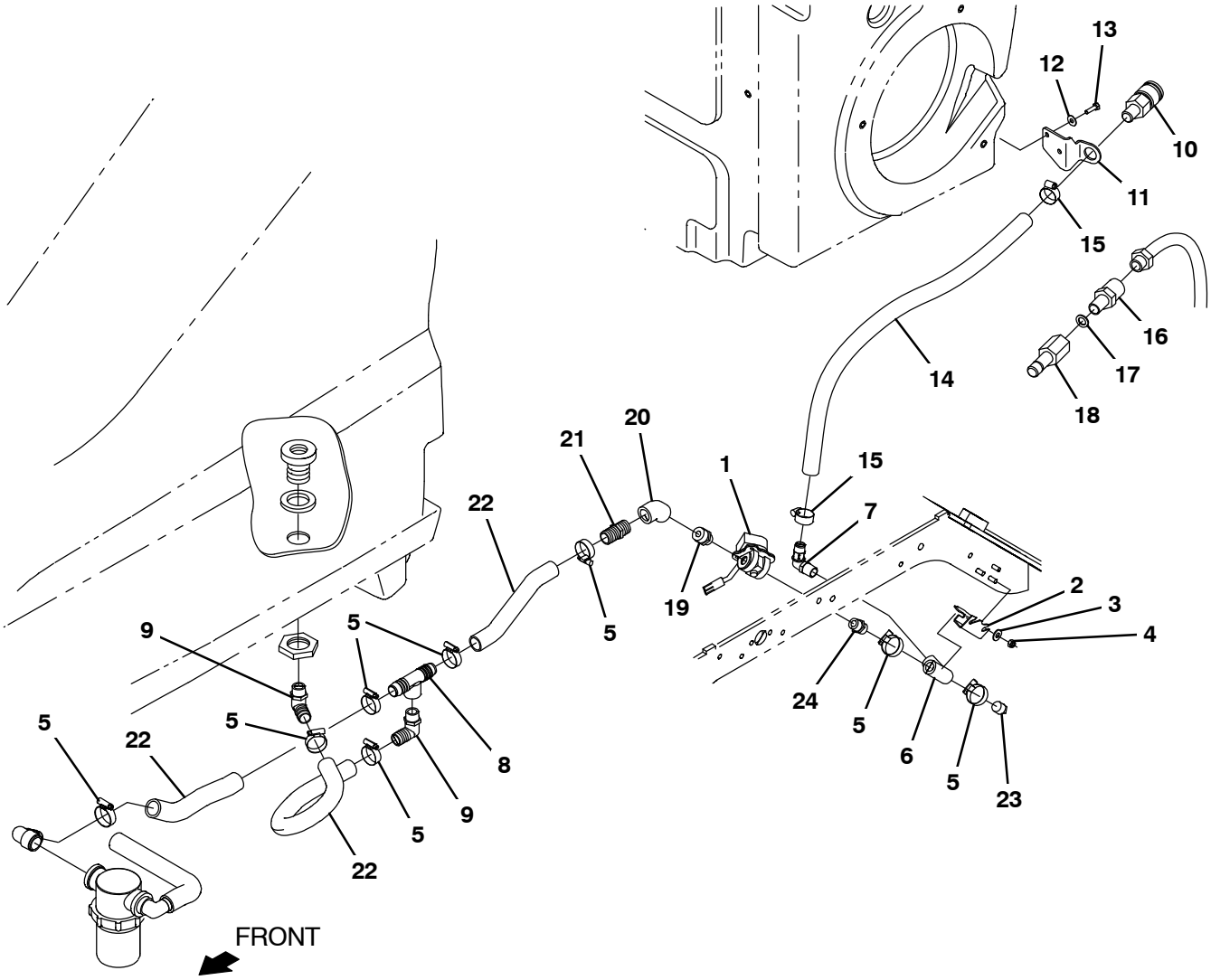

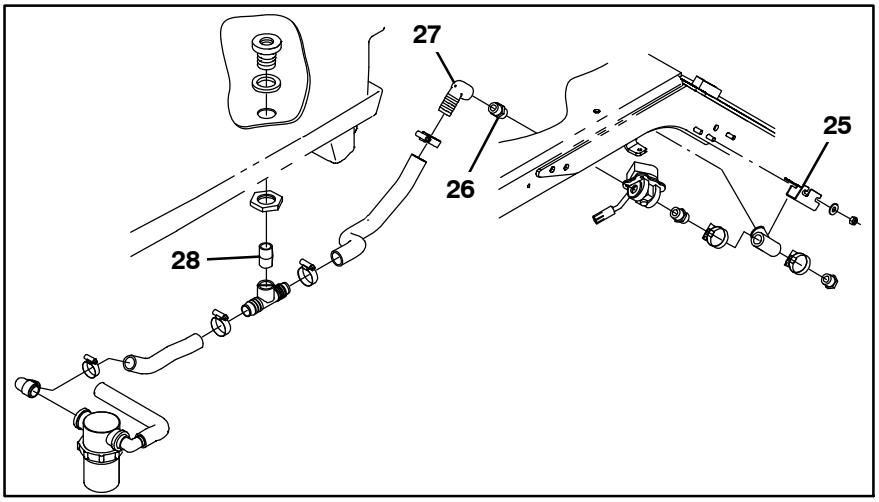

356494

Fig. 27 – Auto Fill Group

Ref.	Part No.	Serial Number	Description	Qty.
1	41410	(0000–)	Valve, Water, Solenoid, 36vdc Pf08/Pf08	1
2	1220430	(0400–)	Bracket, Mtg, Ftg, Auto Fill	1
3	01685	(0000–)	Washer, Flat, 0.38b 0.88d .08, Ss	2
4	08713	(0000–)	Nut, Hex, Lock, M8 X 1.25, Nl, Ss	2
5	11399	(0000–)	Clamp, Hose, Wormdrive, 0.81–1.50d, .50w	8
6	79497	(0000–)	Fitting, Plstc, Tee, Pf08/Pf08/Pf08	1
7	63244–2	(0000–)	Fitting, Plstc, E90, Bm12/Pm08	1
8	365096	(0000–)	Fitting, Plstc, Tee, Bm16/Pf12/Bm16, Br	1
9	18595	(0400–)	Fitting, Plstc, E90, Bm16/Pm12	2
10	24105	(0000–)	Fitting, Brs, Qdc, Bm12/Qf08	1
11	1208043	(0000–)	Bracket, Mtg, Fitting, Qdc	1
12	01684	(0000–)	Washer, Flat, 0.27b 0.69d .05, Ss	2
13	11329	(0000–)	Screw, Hex, M6 X 1.00 X 16, Nl, Ss	2
14	1045034	(0000–)	Hose, Afmkt, Pvc, Wir, 0.75id, 08ft, Clr	2
15	63810	(0000–)	Clamp, Hose, Wormdrive, 0.56–1.06d, .56w	4
16	375321	(0000–)	Fitting, Brs, Str, Pm08/Garden Hose	1
17	01316	(0000–)	Washer, Flat, 0.66b 1.00d .12, Rbr	1
18	33295	(0000–)	Fitting, Brs, Qdc, Pf08	1
19	1005218	(0400–)	Fitting, Plstc, Str, Pm08/Pm12, Nyl	1
20	10575	(0400–)	Fitting, Plstc, E45, Pf12/Pf12	1
21	57379	(0400–)	Fitting, Plstc, Str, Bm16/Pm12	1
22	1214095	(0000–)	Hose, Afmkt, Pvc, Wir,1.00 Id, 03ft, Clr	3
23	17521	(0000–)	Fitting, Pipe, Plug, Pm08, Sq Head	1
24	86508	(0000–)	Fitting, Plstc, Str, Pm08/Pm08	1
25	1207777	(0000–0399)	Bracket, Mtg, Ftg, Auto Fill	1
26	86508	(0000–0399)	Fitting, Plstc, Str, Pm08/Pm08	3
27	1210841	(0000–0399)	Fitting, Plstc, E90, Bm16/Pf8	1
28	69784	(0000–0399)	Fitting, Plstc, Str, Pm12/Pm12 Close	1

Fig. 28 – ES Auto Fill Group

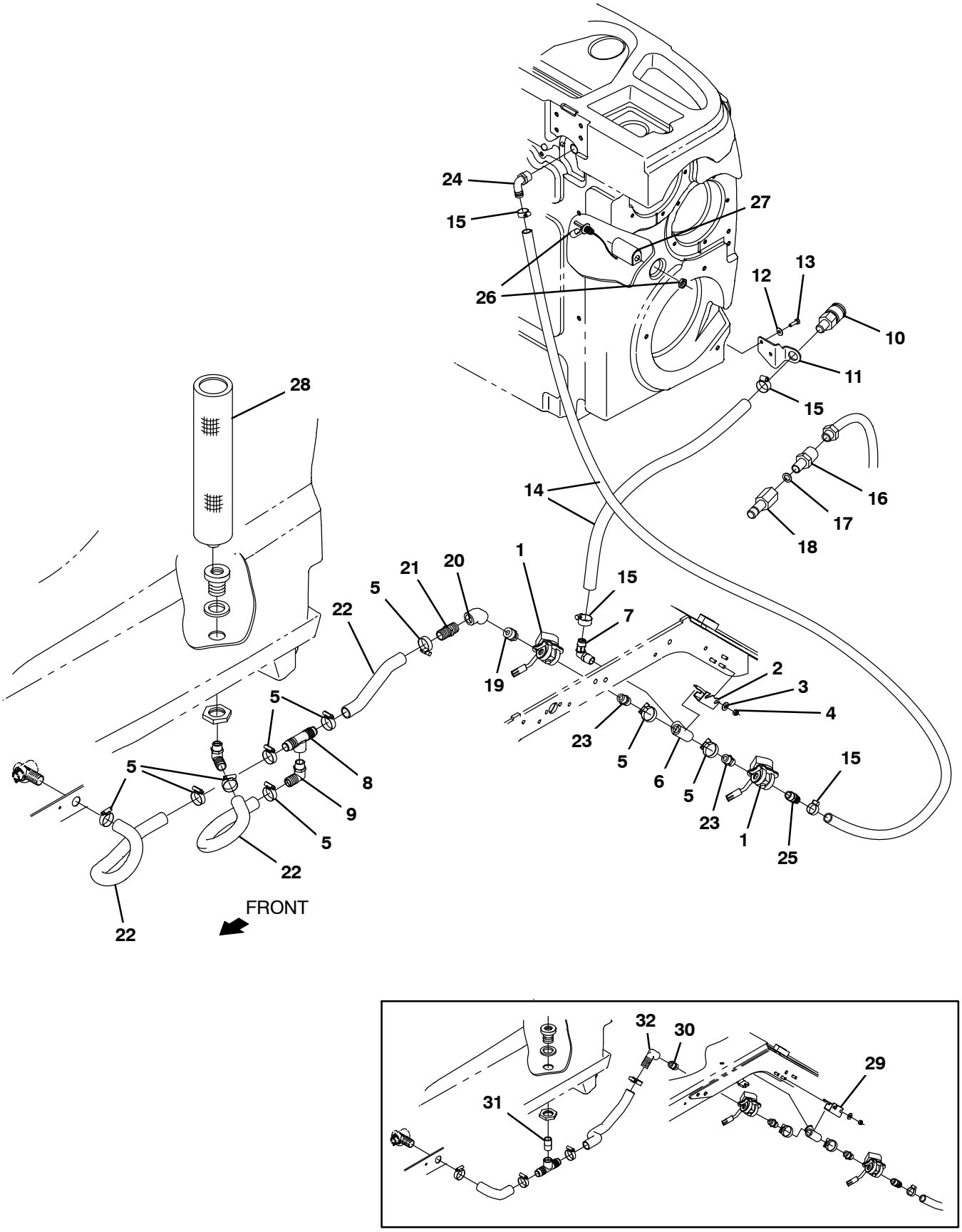

356497

Fig. 28 – ES Auto Fill Group

Ref.	Part No.	Serial Number	Description	Qty.
1	41410	(0000–)	Valve, Water, Solenoid, 36vdc Pf08/Pf08	1
2	1220430	(0400–)	Bracket, Mtg, Ftg, Auto Fill	1
3	01685	(0000–)	Washer, Flat, 0.38b 0.88d .08, Ss	2
4	08713	(0000–)	Nut, Hex, Lock, M8 X 1.25, Nl, Ss	2
5	11399	(0000–)	Clamp, Hose, Wormdrive, 0.81–1.50d, .50w	8
6	79497	(0000–)	Fitting, Plstc, Tee, Pf08/Pf08/Pf08	1
7	63244–2	(0000–)	Fitting, Plstc, E90, Bm12/Pm08	1
8	365096	(0000–)	Fitting, Plstc, Tee, Bm16/Pf12/Bm16, Br	1
9	18595	(0400–)	Fitting, Plstc, E90, Bm16/Pm12	2
10	24105	(0000–)	Fitting, Brs, Qdc, Bm12/Qf08	1
11	1208043	(0000–)	Bracket, Mtg, Fitting, Qdc	1
12	01684	(0000–)	Washer, Flat, 0.27b 0.69d .05, Ss	2
13	11329	(0000–)	Screw, Hex, M6 X 1.00 X 16, Nl, Ss	2
14	1045034	(0000–)	Hose, Afmkt, Pvc, Wir, 0.75id, 08ft, Clr	2
15	63810	(0000–)	Clamp, Hose, Wormdrive, 0.56–1.06d, .56w	4
16	375321	(0000–)	Fitting, Brs, Str, Pm08/Garden Hose	1
17	01316	(0000–)	Washer, Flat, 0.66b 1.00d .12, Rbr	1
18	33295	(0000–)	Fitting, Brs, Qdc, Pf08	1
19	1005218	(0400–)	Fitting, Plstc, Str, Pm08/Pm12, Nyl	1
20	10575	(0400–)	Fitting, Plstc, E45, Pf12/Pf12	1
21	57379	(0400–)	Fitting, Plstc, Str, Bm16/Pm12	1
22	1214095	(0000–)	Hose, Afmkt, Pvc, Wir,1.00 Id, 03ft, Clr	3
23	86508	(0000–)	Fitting, Plstc, Str, Pm08/Pm08	2
24	14877	(0000–)	Fitting, Plstc, E90, Bm12/Pm12	1
25	78398	(0000–)	Fitting, Plstc, Str, Bm12/Pm08, Nyl	1
26	385685	(0000–)	Sensor, Level, Liq, 14vdc 01a .62–11	1
27	1019285	(0000–)	Bracket, Protector, Float Switch	1
28	1208733	(0000–)	Filter, Soltn, 080mesh, Pm12 3.2s 17.5l	1
29	1207777	(0000–0399)	Bracket, Mtg, Ftg, Auto Fill	1
30	86508	(0000–0399)	Fitting, Plstc, Str, Pm08/Pm08	1
31	69784	(0000–0399)	Fitting, Plstc, Str, Pm12/Pm12 Close	1
32	1210841	(0000–0399)	Fitting, Plstc, E90, Bm16/Pf8	1

Fig. 29 – ES Pump Group

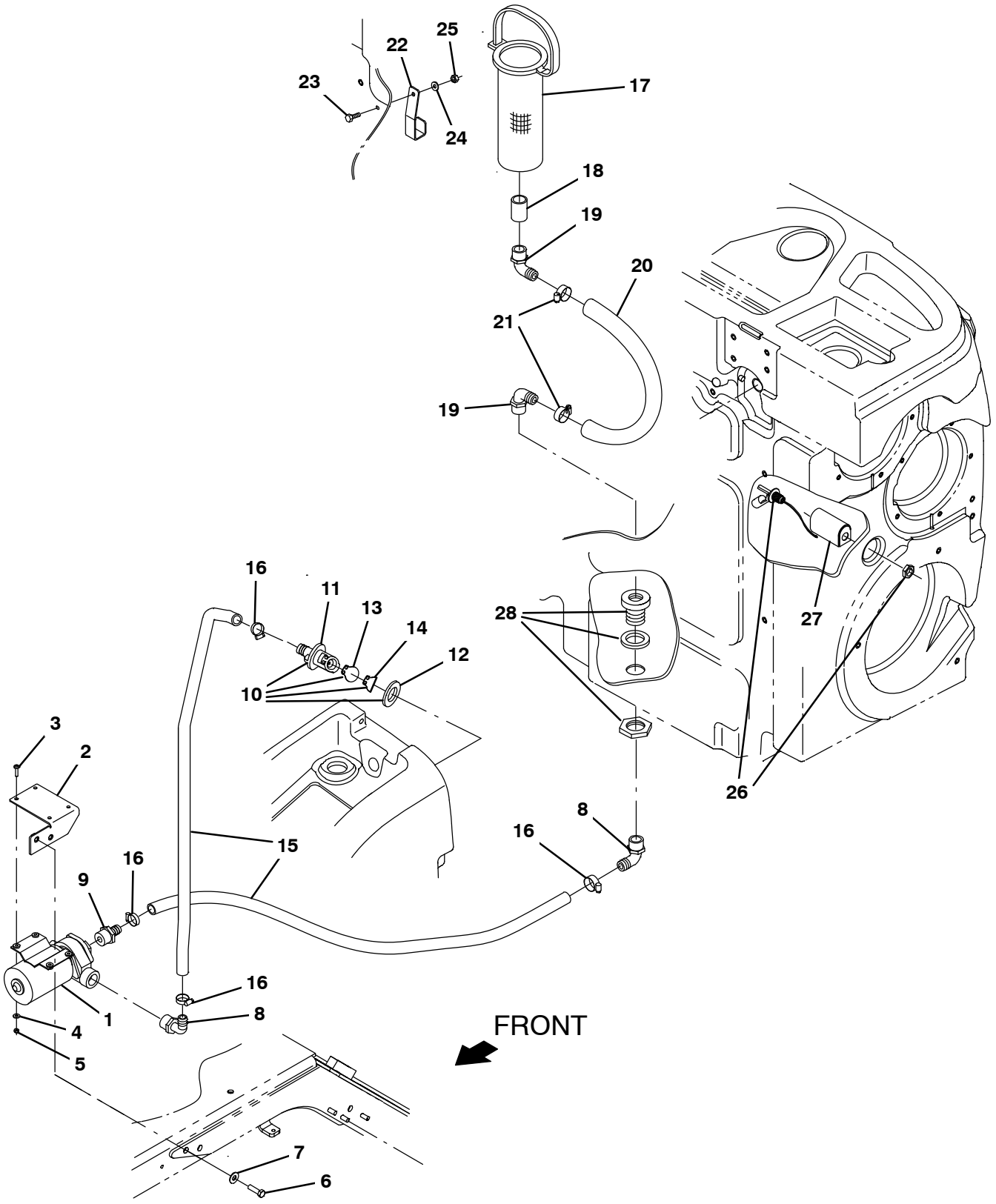

356495

Fig. 29 – ES Pump Group

	Ref.	Part No.	Serial Number	Description	Qty.
	1	1057978	(0000–)	Pump, Soltn, 36vdc, Impeller	1
	2	1207659	(0000–)	Bracket Weldmt, Mtg, Pump	1
	3	24196	(0000–)	Screw, Pan, Phl, M5 X 0.80 X 20, Ss	4
	4	01683	(0000–)	Washer, Flat, 10, Ss	4
	5	09739	(0000–)	Nut, Hex, Lock, M5 X 0.80, Nl, Ss	4
	6	09011	(0000–)	Screw, Hex, M8 X 1.25 X 30, Ss	2
	7	01685	(0000–)	Washer, Flat, 0.38b 0.88d .08, Ss	2
	8	73468	(0000–)	Fitting, Plstc, E90, Bm10/Pm12	2
	9	71628	(0000–)	Fitting, Plstc, Str, Bm10/Pm12 [Nylon]	1
▽	10	9014338	(0000–)	Valve Kit, Check, Es [T17]	1
▲	11	78840	(0000–)	Valve, Check, Pump, Water	1
▲	12	73342	(0000–)	Gasket, .25 1.88d 1.0id [Poron]	1
▲	13	78841	(0000–)	Flapper, Valve, Pump, Water	1
▲	14	1217187	(0000–)	Flap, Resistor, Check Valve	1
	15	1015032	(0000–)	Hose, Afmkt, Pvc, Brd, 0.62id, 08ft, Clr	1
	16	54333	(0000–)	Clamp, Hose, Wormdrive, 0.31–0.88d, .31w	4
	17	386652	(0000–)	Strainer, Soltn, 20mesh, Cyl, 3.5d 09.5l	1
	18	05134	(0000–)	Fitting, Plstc, Str, Pf12/Pf12	1
	19	14877	(0000–)	Fitting, Plstc, E90, Bm12/Pm12	2
	20	1006410	(0000–)	Hose, Afmkt, Pvc, Brd, 0.75id, 03ft, Clr	1
	21	63810	(0000–)	Clamp, Hose, Wormdrive, 0.56–1.06d, .56w	2
	22	1061954	(0000–)	Bracket, Strainer, Pump, Es	1
	23	09007	(0000–)	Screw, Hex, M6 X 1.00 X 25, Ss	1
	24	76426	(0000–)	Washer, Sealing, 0.28b 0.75d Ss, Neo	1
	25	08712	(0000–)	Nut, Hex, Lock, M6 X 1.00, Nl, Ss	1
	26	385685	(0000–)	Sensor, Level, Liq, 14vdc 01a .62–11	1
	27	1019285	(0000–)	Bracket, Protector, Float Switch	1
	28	377349	(0000–)	Fitting, Plstc, Pf12/Pf12, Bh	1

Fig. 30 – ES Detergent Metering / Severe Environment Group

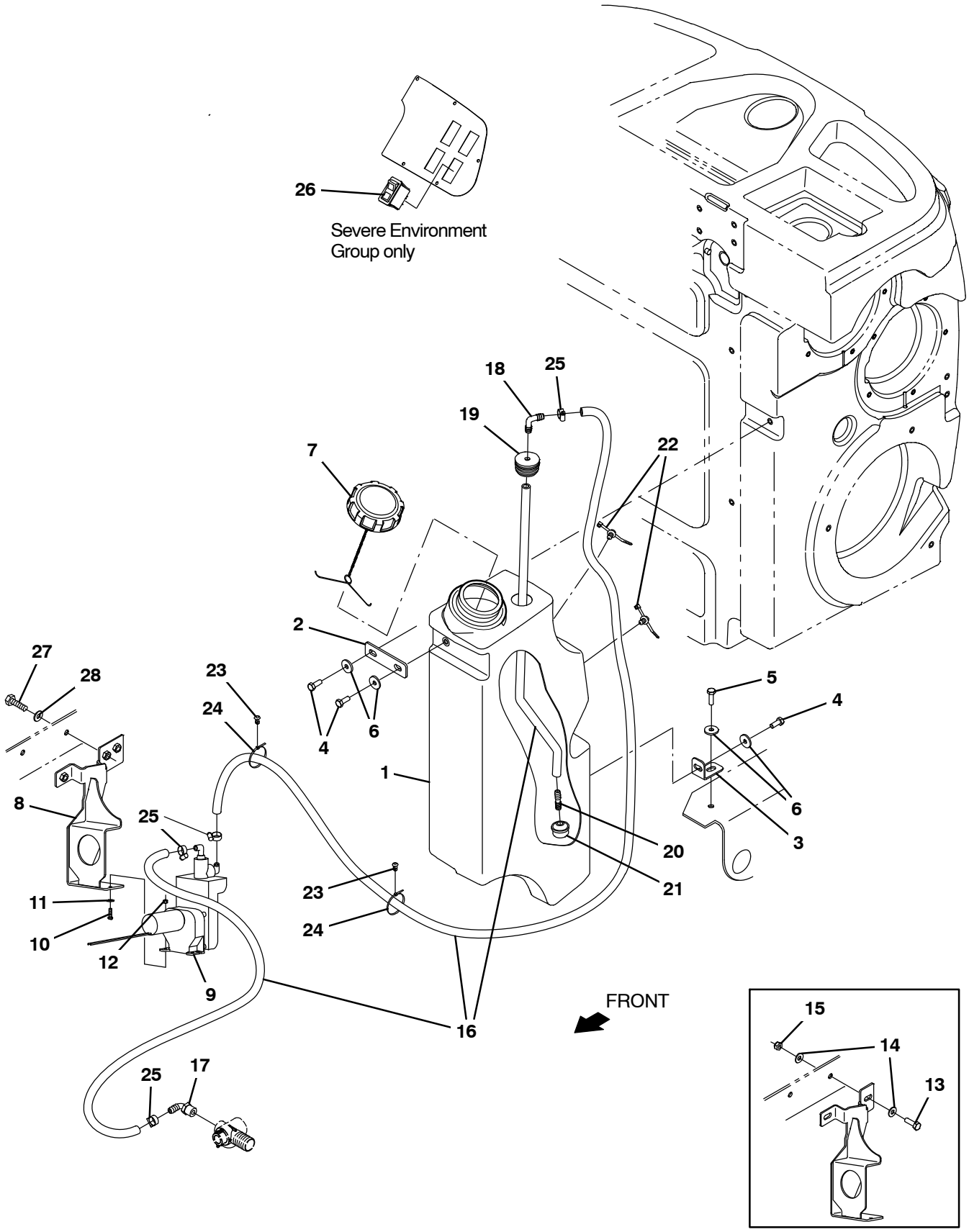

356496

Fig. 30 – ES Detergent Metering / Severe Environment Group

Ref.	Part No.	Serial Number	Description	Qty.
1	9020287	(0000–)	Tank Kit, Detergent, CE Afmkt [T17]	1
2	1208732	(0000–)	Plate, Mtg, Tank, Detergent	1
3	1207750	(0000–)	Bracket, Mtg, Tank, Detergent	1
4	12273	(0000–)	Screw, Hex, M8 X 1.25 X 20, Nl, Ss	3
5	09011	(0000–)	Screw, Hex, M8 X 1.25 X 30, Ss	1
6	1017218	(0000–)	Washer, Flat, 0.32b 1.00d .12, Ss	4
7	1011885	(0000–)	Cap, Tank	1
8	1213317	(0000–0399)	Bracket Wldt, Pump	1
8	1225439	(0400–)	Bracket Wldt, Pump	1
9	386364	(0000–)	Pump, Detgt, 36vdc (See Breakdowns)	1
10	24265	(0000–)	Screw, Pan, Phl, M4 X 0.70 X 16, Ss	2
11	01683	(0000–)	Washer, Flat, 10, Ss	2
12	33932	(0000–)	Nut, Hex, Lock, M4 X 0.70, Nl, Ss	2
13	09010	(0000–0399)	Screw, Hex, M8 X 1.25 X 25, Ss	2
14	32490	(0000–0399)	Washer, Flat, 0.25, Std	4
15	08713	(0000–0399)	Nut, Hex, Lock, M8 X 1.25, Nl, Ss	2
16	1014981	(0000–)	Hose, Afmkt, Pvc, Brd, 0.38id, 20ft, Clr	1
17	1005630	(0000–)	Fitting, Plstc, E90, Bm06/Pm06, Nyl	1
18	20951	(0000–)	Fitting, Plstc, E90, Bm06/Bm06	1
19	20944	(0000–)	Grommet, Pye, 0.37id, F/1.5h, .13 Matl	1
20	20950	(0000–)	Fitting, Plstc, Str, Bm06/Bm06	1
21	20952	(0000–)	Screen, Pump	1
22	1210807	(0000–)	Wire, Tie [W/.25” Fir Tree Clip]	2
23	1071085	(0000–)	Clip, Tie, 0.25d, Plstc	4
24	130773	(0000–)	Tie, Cable, Nyl, 11.0l, .14w, 3.0 Max. D	6
25	43844	(0000–)	Clamp, Hose, Wormdrive, 0.25–0.62d, .31w	4
26	1207284	(0000–)	Switch, Rocker [Mom,Off,Mom, Dual Led] (Only on Severe Environment Group)	1
27	09011	(0400–)	Screw, Hex, M8 X 1.25 X 30, Ss	2
28	32490	(0400–)	Washer, Flat, 0.25, Std	2

Fig. 31 – ec–H20 Solution Pump Group

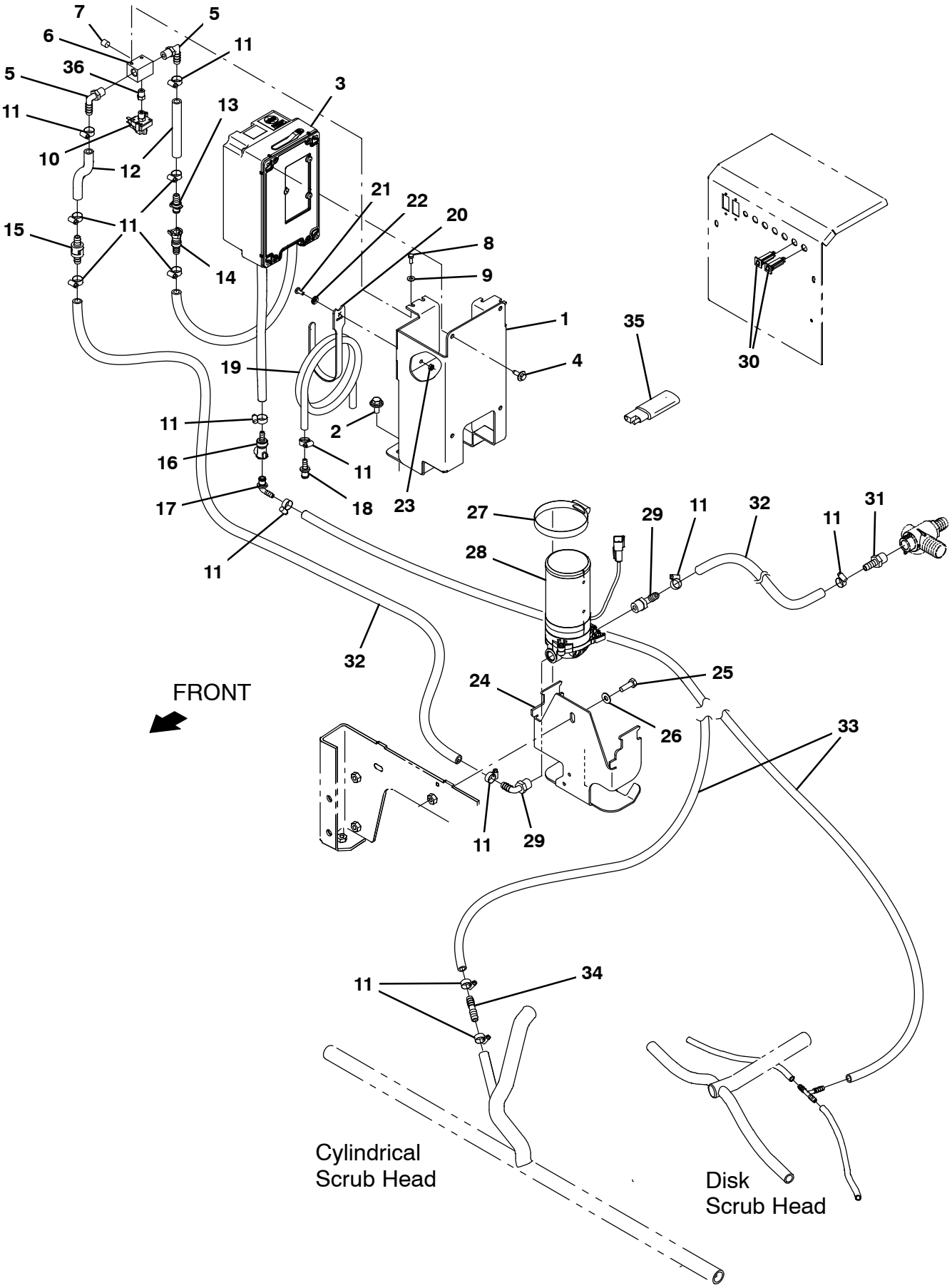

356498

Fig. 31 – ec–H20 Solution Pump Group

Ref.	Part No.	Serial Number	Description	Qty.
1	1212443	(0000–)	Bracket Wldt, Mgt [T17 Ec–H2o]	1
2	1020341	(0000–)	Screw, Hex, M8 X 1.25 X 20, Ss, Sems	2
3	9020260	(0000–)	Ec–H20 Module Kit, Afmkt [T17] (See Breakdowns)	1
4	1040467	(0000–)	Screw, Hex, M6 X 1.00 X 20, 9.8, Sems	4
5	57248	(0000–)	Fitting, Plstc, E90, Bm06/Pm04, Nyl	2
6	1059231	(0000–)	Fitting, Stl, Pm04/Pm02/Pm04/Pm02, Spcl	1
7	150208	(0000–)	Fitting, Brs, Str, Pm02, Plug [Skhd]	1
8	09738	(0000–)	Screw, Hex, M5 X 0.80 X 12, Ss	2
9	01683	(0000–)	Washer, Flat, 10, Ss	2
10	1055254	(0000–)	Switch, Press, 25psi, Pm02	1
11	43844	(0000–)	Clamp, Hose, Wormdrive, 0.25–0.62d, .31w	15
12	1014974	(0000–)	Hose, Afmkt, Pvc, Brd, 0.38id, 02ft, Clr	1
13	1203814	(0000–)	Fitting, Plstc, Str, Bm06, Cplg, Male	1
14	1203454	(0000–)	Fitting, Plstc, Str, Bm06, Cplg, Fem	1
15	1015455	(0000–)	Valve, Check, 0005psi Bm06/Bm06	1
16	1203996	(0000–)	Fitting, Plstc, Str, Bm05, Cplg, Fem	1
17	1204024	(0000–)	Fitting, Plstc, E90, Bm04 Cplg Male	1
18	1204338	(0000–)	Fitting, Plstc, Str, Bm04, Cplg, Male	1
19	1011522	(0000–)	Hose, Afmkt, Pvc, Brd, 0.25Id, 03Ft	1
20	1067526	(0000–)	Fastener, 8.0l [Hook And Loop]	1
21	09200	(0000–)	Screw, Pan, Phl, M5 X 0.80 X 12, Ss	1
22	01683	(0000–)	Washer, Flat, 10, Ss	1
23	09739	(0000–)	Nut, Hex, Lock, M5 X 0.80, Nl, Ss	1
24	1206138	(0000–0399)	Bracket, Pump	1
24	1221952	(0400–)	Bracket, Pump	1
25	09010	(0000–)	Screw, Hex, M8 X 1.25 X 25, Ss	1
26	32490	(0000–)	Washer, Flat, 0.25, Std	1
27	43555	(0000–)	Clamp, Hose, Wormdrive, , 0.25–0.62D, .31W	1
28	1200328	(0000–)	Pump, Soltn, Ele, 36vdc, 60psi	1
29	1005630	(0000–)	Fitting, Plstc, E90, Bm06/Pm06, Nyl	1
30	1064184	(0000–)	Circuitbreaker, 02.5a, Resetable	2
31	150538	(0000–)	Fitting, Plstc, Str, Bm06/Pm06	1
32	1014976	(0000–)	Hose, Afmkt, Pvc, Brd, 0.38id, 08ft, Clr	1
33	1014949	(0000–)	Hose, Afmkt, Pvc, Brd, 0.25id, 08ft, Clr	1
34	1039557	(0000–)	Fitting, Plstc, Str, Bm04/Bm06	1
35	1040868	(0000–)	Capacitor, Plug [.01 Uf, 200v]	1
36	1062403	(0000–)	Fitting, Brs, Snubber, Pm02/Pf02	1

Fig. 32 – ec–H20 solution Supply Group, Side Brush

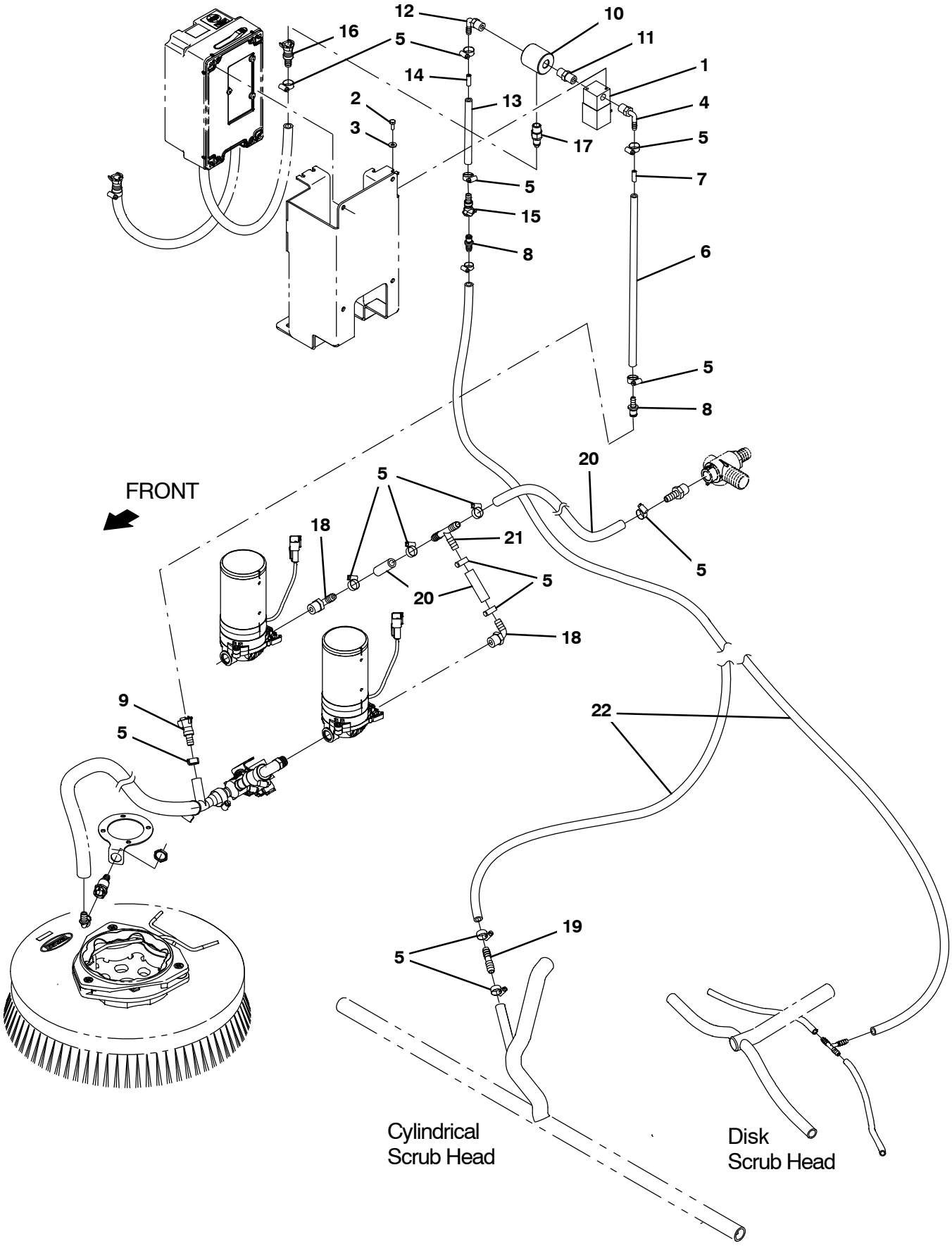

356499

Fig. 32 – ec–H20 solution Supply Group, Side Brush

Ref.	Part No.	Serial Number	Description	Qty.
1	1028581	(0000–)	Valve, Water, Solenoid, 36vdc 6.0mm Pf04	1
2	09738	(0000–)	Screw, Hex, M5 X 0.80 X 12, Ss	2
3	01683	(0000–)	Washer, Flat, 10, Ss	2
4	1011170	(0000–)	Fitting, Plstc, E90, Bm04/Pm04, Nyl	1
5	43844	(0000–)	Clamp, Hose, Wormdrive, 0.25–0.62d, .31w	17
6	1014949	(0000–)	Hose, Afmkt, Pvc, Brd, 0.25Id, 08Ft	1
7	1200467	(0000–)	Fitting, Plstc, Rst	1
8	1204338	(0000–)	Fitting, Plstc, Str, Bm04, Cplg, Male	2
9	1203454	(0000–)	Fitting, Plstc, Str, Bm06, Cplg, Fem	1
10	1206303	(0000–)	Fitting, Plstc, Pf04/Pf04/Pf04	1
11	1052010	(0000–)	Fitting, Plstc, Str, Pm04/Pm04	1
12	1011170	(0000–)	Fitting, Plstc, E90, Bm04/Pm04, Nyl	1
13	1011409	(0000–)	Hose, Afmkt, Pvc, Brd, 0.25Id, 01Ft	1
14	1201441	(0000–)	Fitting, Plstc, Rst, Main Head	1
15	1002898	(0000–)	Fitting, Plstc, Str, Bm04, Cplg,Fem[Tco]	1
16	1203996	(0000–)	Fitting, Plstc, Str, Bm05, Cplg, Fem	1
17	1002899	(0000–)	Fitting, Plstc, Str, Pm04, Cplg,Mal[Tco]	1
18	1005630	(0000–)	Fitting, Plstc, E90, Bm06/Pm06, Nyl	2
19	1039557	(0000–)	Fitting, Plstc, Str, Bm04/Bm06	1
20	1006400	(0000–)	Hose, Afmkt, Pvc, Brd, 0.38id, 03ft, Clr	1
21	87173	(0000–)	Fitting, Plstc, Tee, Bm06/Bm06/Bm06	1
22	1011411	(0000–)	Hose, Afmkt, Pvc, Brd, 0.25Id, 03Ft	1

Fig. 33 – ec–H20 Wire Harness Group

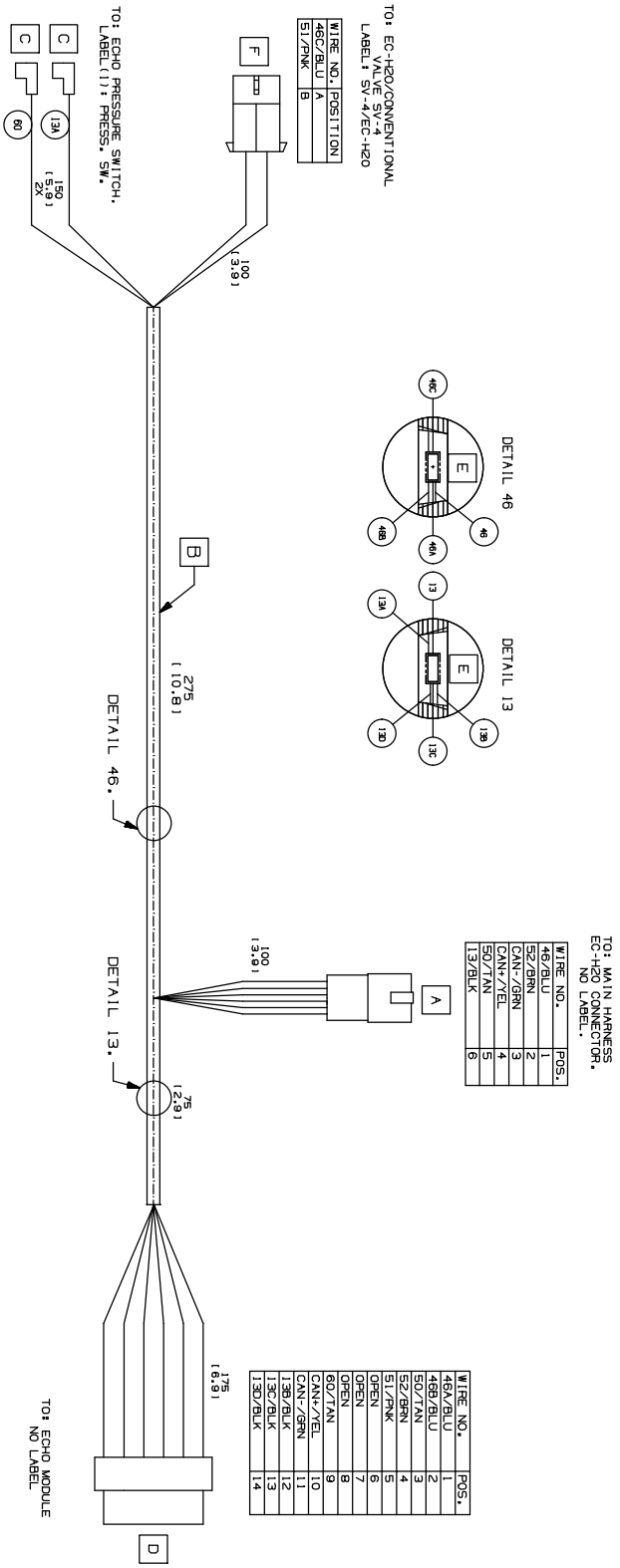

Ref.	Part No.	Serial Number	Description	Qty.
1	1069671	(0000–)	Harness, Ele [Ec–H20, T12]	1

Fig. 34 – Spray Nozzle Group

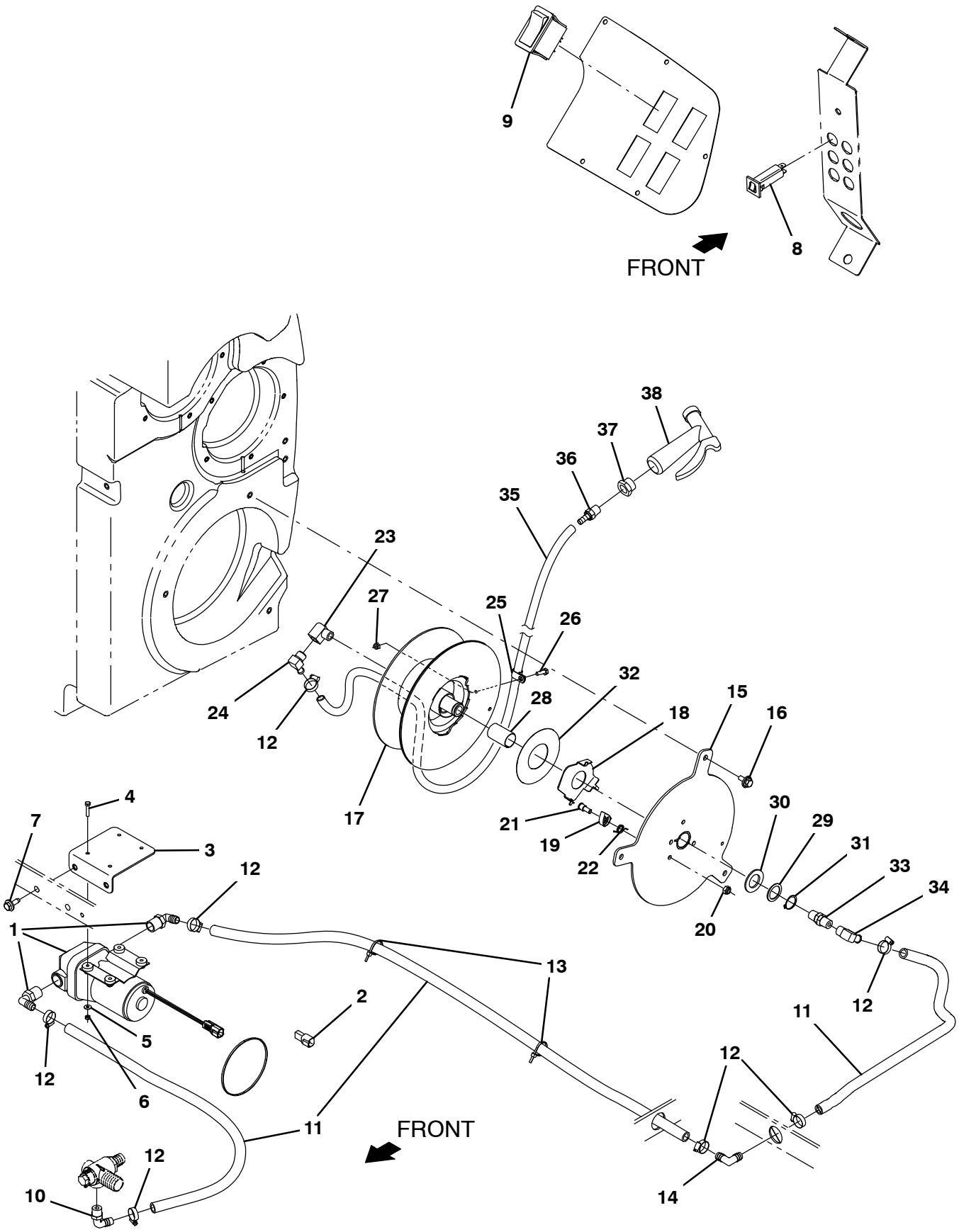

356493

Fig. 34 – Spray Nozzle Group

Ref.	Part No.	Serial Number	Description	Qty.
1	1054178	(0000–)	Pump, Soltn, Ele, 36vdc, 45psi	1
2	1056982	(0000–)	Diode, Ele, Plug	1
3	1207774	(0000–)	Bracket Wldt, Pump, Spray Hose	1
4	12316	(0000–)	Screw, Hex, M5 X 0.80 X 25, Ss	4
5	01683	(0000–)	Washer, Flat, 10, Ss	4
6	09739	(0000–)	Nut, Hex, Lock, M5 X 0.80, Nl, Ss	4
7	1037346	(0000–)	Screw, Hex, M8 X 1.25 X 25, 9.8, Sems	2
8	1064188	(0000–)	Circuitbreaker, 15.0a, Resetable	1
9	398500	(0000–)	Switch, Rocker, Dpdt, On / None / On	1
10	64778	(0000–)	Fitting, Plstc, E90, Bm08/Pm06	1
11	1011837	(0000–)	Hose, Afmkt, Pvc, Brd, 0.50id, 12ft, Clr	1
12	54333	(0000–)	Clamp, Hose, Wormdrive, 0.31–0.88d, .31w	7
13	130773	(0000–)	Tie, Cable, Nyl, 11.0l, .14w, 3.0 Max. D	2
14	63987–1	(0000–)	Fitting, Plstc, E90, Bm08/Bm08	1
15	1206482	(0000–)	Plate Wldt, Mtg, Hose–Reel [T17]	1
16	1020341	(0000–)	Screw, Hex, M8 X 1.25 X 20, Ss, Sems	3
17	1206456	(0000–)	Reel Assy, Hose, Large	1
18	1203947	(0000–)	Washer, Retainer, Spring	1
19	1201393	(0000–)	Pawl, Ratchet	1
20	08709	(0000–)	Nut, Hex, Lock, M8 X 1.25, Nl	1
21	1056719	(0000–)	Bolt, Shld, .41d X 0.35, M8 X 1.25	1
22	1201423	(0000–)	Spring, Torsion, Hose Reel	1
23	24584	(0000–)	Fitting, Brs, E90, Pf06/Pm06, Spcl	1
24	1060128	(0000–)	Fitting, Brs, E90, Bm06/Pm06, Short	1
25	33584	(0000–)	Clamp, Cable, Stl, 0.63d X 0.50w, 1hole	1
26	06943	(0000–)	Screw, Hex, M6 X 1.00 X 20, 8.8	1
27	08708	(0000–)	Nut, Hex, Lock, M6 X 1.00, Nl	1
28	1057816	(0000–)	Bushing, Sleeve, 1.00b 1.13d 1.750l, Fgl	1
29	1057814	(0000–)	Washer, Thrust, Plstc 1.02b 1.38d	1
30	32598	(0000–)	Washer, Flat, 1.02b 1.75d .12, Stl	1
31	09005	(0000–)	Ring, Retaining, Ext, 1.00d, Basic	1
32	1066919	(0000–)	Washer, Thrust, 50.0b 110.0d 0.79w	1
33	1200394	(0000–)	Fitting, Swivel, Str, Pf06/Pm06, Brs	1
34	47388	(0000–)	Fitting, Brs, E90, Em08/Pm06	1
35	9020252	(0000–)	Hose Kit, Spray, Afmkt [T17]	1
36	1060428	(0000–)	Fitting, Stl, Str, Bm06/Pm06, Swivel	1
37	1027976	(0000–)	Fitting, Brs, Str, Pf06/Pm12	1
38	769785	(0000–)	Nozzle, Spray, Gun	1

Fig. 35 – Vacuum Wand Kit

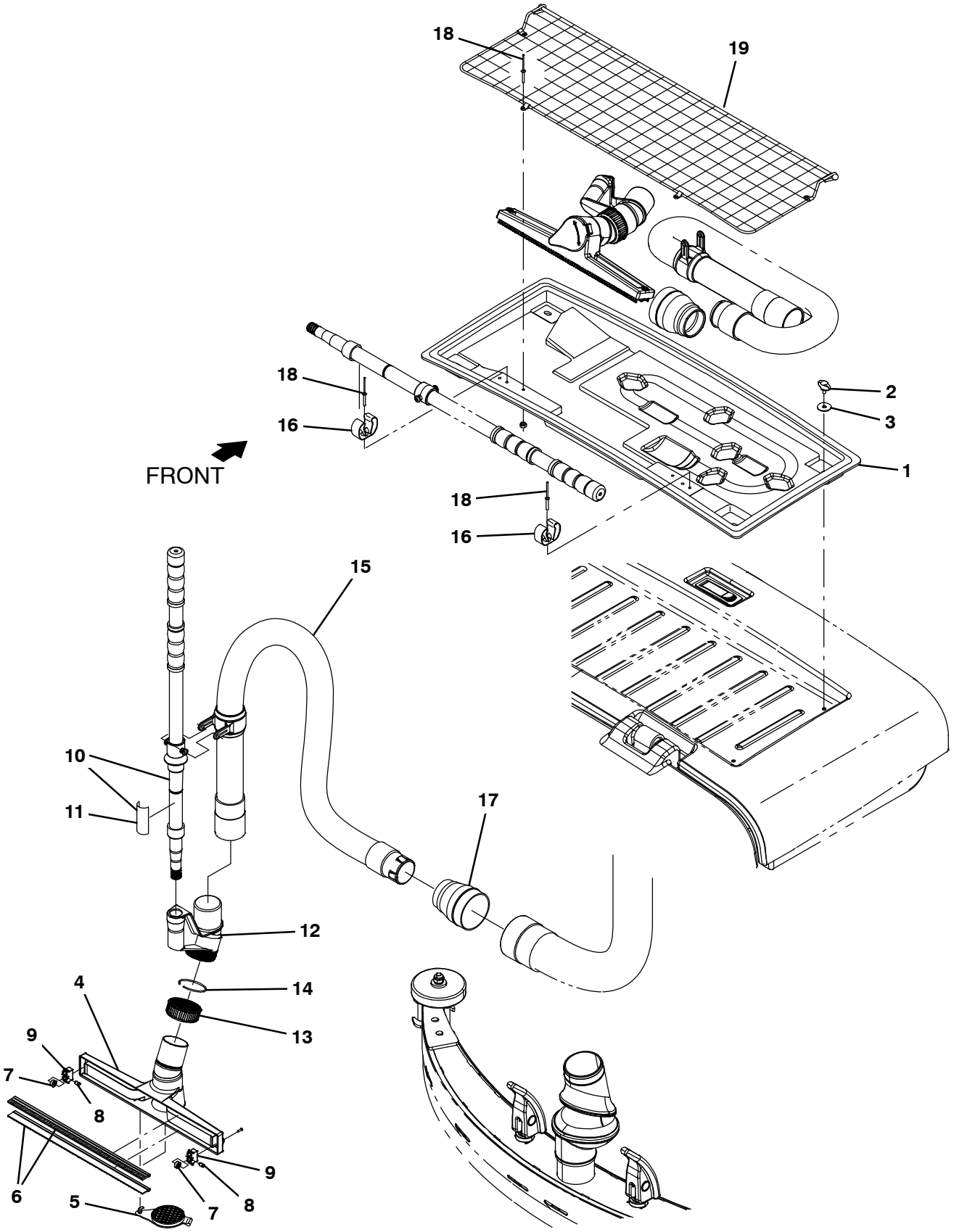

356500

Fig. 35 – Vacuum Wand Kit

	Ref.	Part No.	Serial Number	Description	Qty.
▽		9020080	(0000–)	Vac Wand Kit, Ci [T17]	1
▲	1	1207911	(0000–)	Tray, Vac Wand	1
▲	2	1211150	(0000–)	Knob, Star,	4
▲	3	397779	(0000–)	Washer, Flat, 0.28b 1.00d .06, Stl, Blk	4
▲	4	1060440	(0000–)	Squeegee, Hand	1
▲	5	1060691	(0000–)	Plug, Adapter, Port	1
▲	6	1061356	(0000–)	Retainer, Blade, Sqge, 14.2l (1 set = 2 blades)	1
▲	7	1061570	(0000–)	Bearing, Ball, 0.24b 0.51d 0.20w [2seal]	2
▲	8	1061571	(0000–)	Pin, Axle, Brg	2
▲	9	1022671	(0000–)	Housing, Sqge, Holder, Wheel, F/609648	2
▲▽	10	9008155	(0000–)	Handle Kit, Wand, Afmkt	1
▲▲	11	1062659	(0000–)	Label, Opertnl, Vacuum Wand Handle	1
▲	12	1060708	(0000–)	Adapter, Swivel, 1.75, Abs	1
▲	13	1060718	(0000–)	Nut, Compression, 2.25–12, Abs	1
▲	14	1060720	(0000–)	Ring, Compression	1
▲	15	1200642	(0000–)	Hose Assy, Sqge, W/2cuff	1
▲	16	1014295	(0000–)	Clip, Grip, Hose, 0.75 – 1.12, Stl, Blk, Vyl	2
▲	17	1207517	(0000–)	Cuff, Adapter, 1.75 X 2.50, Pvc	1
▲	18	1213513	(0000–)	Rivet, Blind, .156D X 1.07 X .31D, Alm	6
▲	19	1213799	(0000–)	Mess Assy, Cloth	1

Fig. 36 – Squeegee Guard Group

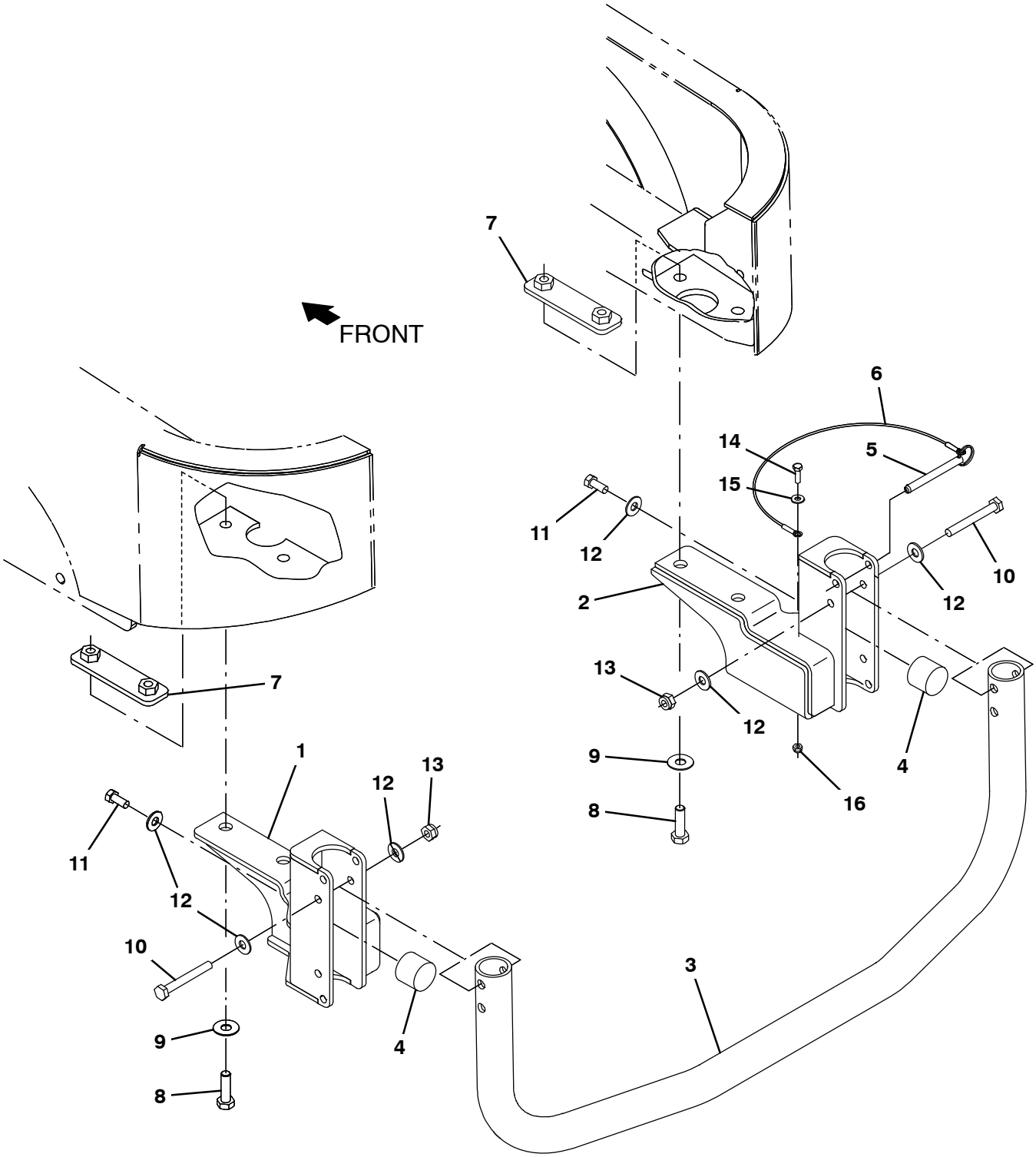

356488

Fig. 36 – Squeegee Guard Group

Ref.	Part No.	Serial Number	Description	Qty.
1	1207961	(0000–)	Bracket, Bumper, Lh, Squeegee [T17]	1
2	1207902	(0000–)	Bracket, Bumper, Rh, Squeegee [T17]	1
3	1208109	(0000–)	Tube, Guard	1
4	1024977	(0000–)	Bumper, Ure, 1.50d 1.25l	2
5	369359	(0000–)	Pin, Hitch, .375d X 3.12l, Pl	1
6	57702	(0000–)	Cable, Glv .06d 012.0l .26eye /.26eye	1
7	1208053	(0000–)	Plate, Doubler	2
8	69972	(0000–)	Screw, Hex, M12 X 1.75 X 40, 10.9	4
9	140045	(0000–)	Washer, Flat, 0.51b 1.25d .06, Ss	4
10	06965	(0000–)	Screw, Hex, M10 X 1.50 X 80, 8.8	2
11	21196	(0000–)	Screw, Hex, .38–16 X 0.88, G5	2
12	32492	(0000–)	Washer, Flat, 0.38, Std	6
13	41430	(0000–)	Nut, Hex, Lock, M10 X 1.5, Nl	2
14	06943	(0000–)	Screw, Hex, M6 X 1.00 X 20, 8.8	1
15	32483	(0000–)	Washer, Flat, 0.25, Sae	1
16	08708	(0000–)	Nut, Hex, Lock, M6 X 1.00, Nl	1

Fig. 37 – Positive Solution Control Drain Group

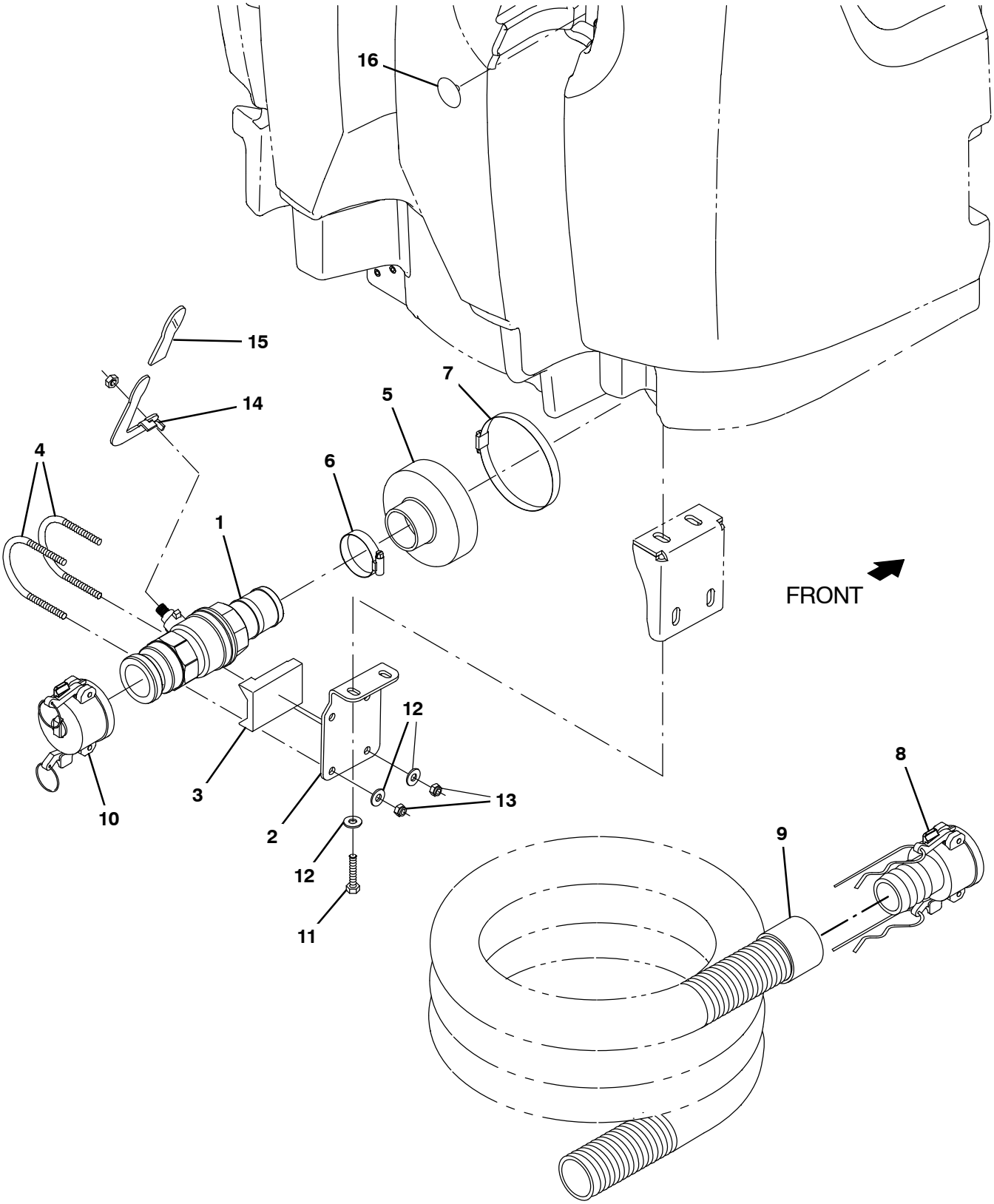

356595

Fig. 37 – Positive Solution Control Drain Group

Ref.	Part No.	Serial Number	Description	Qty.
1	1213186	(0000–)	Valve, Ball, Drain, 2.00id, Rh	1
2	1212006	(0000–)	Bracket, Mtg, Valve, Drain	1
3	1213118	(0000–)	Support, Valve, Drain	1
4	1213182	(0000–)	Clamp, Valve, U–Bolt	2
5	1211963	(0000–)	Cuff, Hose, 5.0 / 2.0 Id	1
6	22297	(0000–)	Clamp, Hose, Wormdrive, 1.56–2.50d, .50w	1
7	1201434	(0000–)	Clamp, Hose, Wormdrive, 4.63–5.50, 0.5w	1
8	1213392	(0000–)	Fitting, Coupler, Hose, Shank, Fem	1
9	1213206	(0000–)	Hose Assy, W/1 Cuff, 2.0 Id 120.0 L	1
10	1214326	(0000–)	Rework, Dust Cap, Valve, Drain	1
11	12333	(0000–)	Screw, Hex, M8 X 1.25 X 25, Ss, Nl	2
12	01685	(0000–)	Washer, Flat, 0.38b 0.88d .08, Ss	6
13	08713	(0000–)	Nut, Hex, Lock, M8 X 1.25, Nl, Ss	4
14	1212366	(0000–)	Handle, Valve	1
15	1213362	(0000–)	Grip, Handle, Valve	1
16	1074075	(0000–)	Plug, Hole, Rnd, 0.25H, 1.00D 0.6L, Nyl	1

Fig. 38 – Telemetry Group

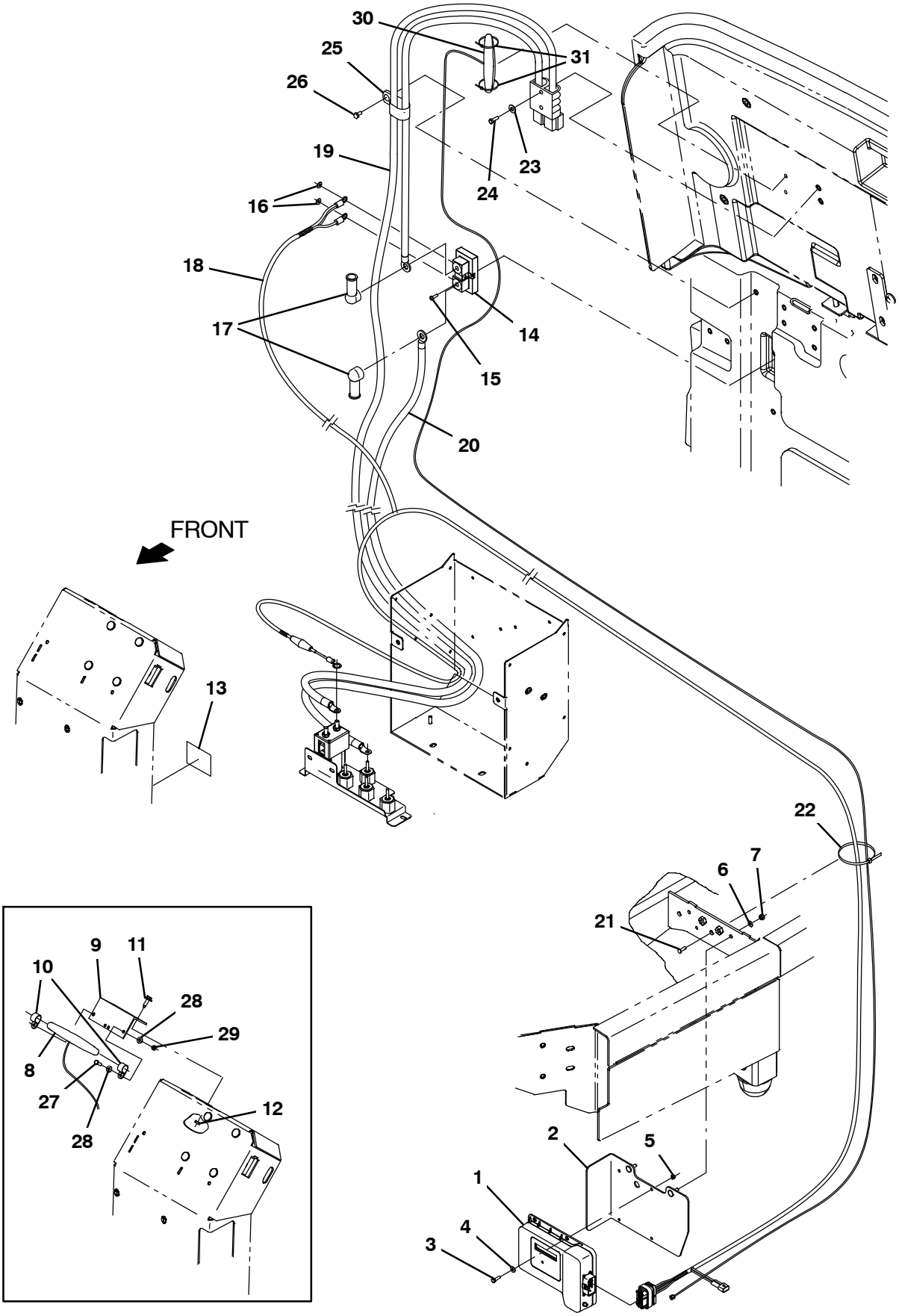

356510

Fig. 38 – Telemetry Group

	Ref.	Part No.	Serial Number	Description	Qty.
	1	1070541	(0000–)	Controlbox Assy, Telem [Int]	1
	2	1207701	(0000–)	Bracket Wldt, Mtg, Telem	1
	3	24199	(0000–)	Screw, Hex, M5 X 0.80 X 16, Ss	3
	4	01683	(0000–)	Washer, Flat, 10, Ss	3
	5	06549	(0000–)	Nut, Hex, Lock, M5 X 0.80, Nl	3
	6	01684	(0000–)	Washer, Flat, 0.27b 0.69d .05, Ss	2
	7	08712	(0000–)	Nut, Hex, Lock, M6 X 1.00, Nl, Ss	2
	8	1070324	(0000–0399)	Antenna, Telem, 110 In [Gprs]	1
	9	1070402	(0000–0399)	Angle, Mtg, Antenna, Telem	1
	10	140916	(0000–0399)	Clamp, Cable, Nyl, 0.62d, Nat	2
	11	1040467	(0000–0399)	Screw, Hex, M6 X 1.00 X 20, 9.8, Sems	2
	12	08712	(0000–0399)	Nut, Hex, Lock, M6 X 1.00, Nl, Ss	2
	13	1069580	(0000–)	Label, Opertnl, Telem [Fcc/Ic]	1
	14	1070757	(0000–)	Shunt, 050mv 400a	1
	15	06927	(0000–)	Screw, Pan, Phl, M4 X 0.70 X 16, 4.8	2
	16	07514	(0000–)	Washer, Lock, Int, 10, Ss	2
	17	611221	(0000–)	Boot, Terminal, Battery, 25.4mm, Blk	2
▽	18	1073059	(0000–)	Harness, Ele [Telemetry, T17]	1
▲		9009990	(0000–)	Fuse, 002a, 250vdc, Cartridge	1
	19	1073077	(0000–0399)	Cable, Battery, 1/0ga [Telem, T17]	1
	19	1074600	(0400–)	Cable, Battery, 2/0ga [M17, Telem]	1
	20	1073078	(0000–0399)	Cable, 1/0ga 48.2l Blk[M9 Ring/.25 Ring]	1
	20	1074601	(0400–)	Cable, 2/0ga 61.0Ll Blk[M6 Ring/M9 Ring]	1
	21	1071085	(0000–)	Clip, Tie, 0.25d, Plstc	1
	22	763114	(0000–)	Tie, Cable, 11.3l, 2.75d Max	2
	23	32483	(0000–)	Washer, Flat, 0.25, Sae	2
	24	33930	(0000–)	Screw, Hex, M6 X 1.00 X 40, Ss	2
	25	09570	(0000–)	Clamp, Cable, Stl, 0.90d X 0.62w, 1hole	3
	26	09740	(0000–)	Screw, Hex, M8 X 1.25 X 20, Ss	3
	27	24199	(0000–0399)	Screw, Hex, M5 X 0.80 X 16, Ss	2
	28	01683	(0000–0399)	Washer, Flat, 10, Ss	4
	29	06549	(0000–0399)	Nut, Hex, Lock, M5 X 0.80, Nl	2
	30	1070658	(0400–)	Antenna, Telem, 187 In [Gprs]	1
	31	1210807	(0400–)	Wire, Tie [W/.25” Fir Tree Clip]	2

Fig. 39 – Battery Rollout Group

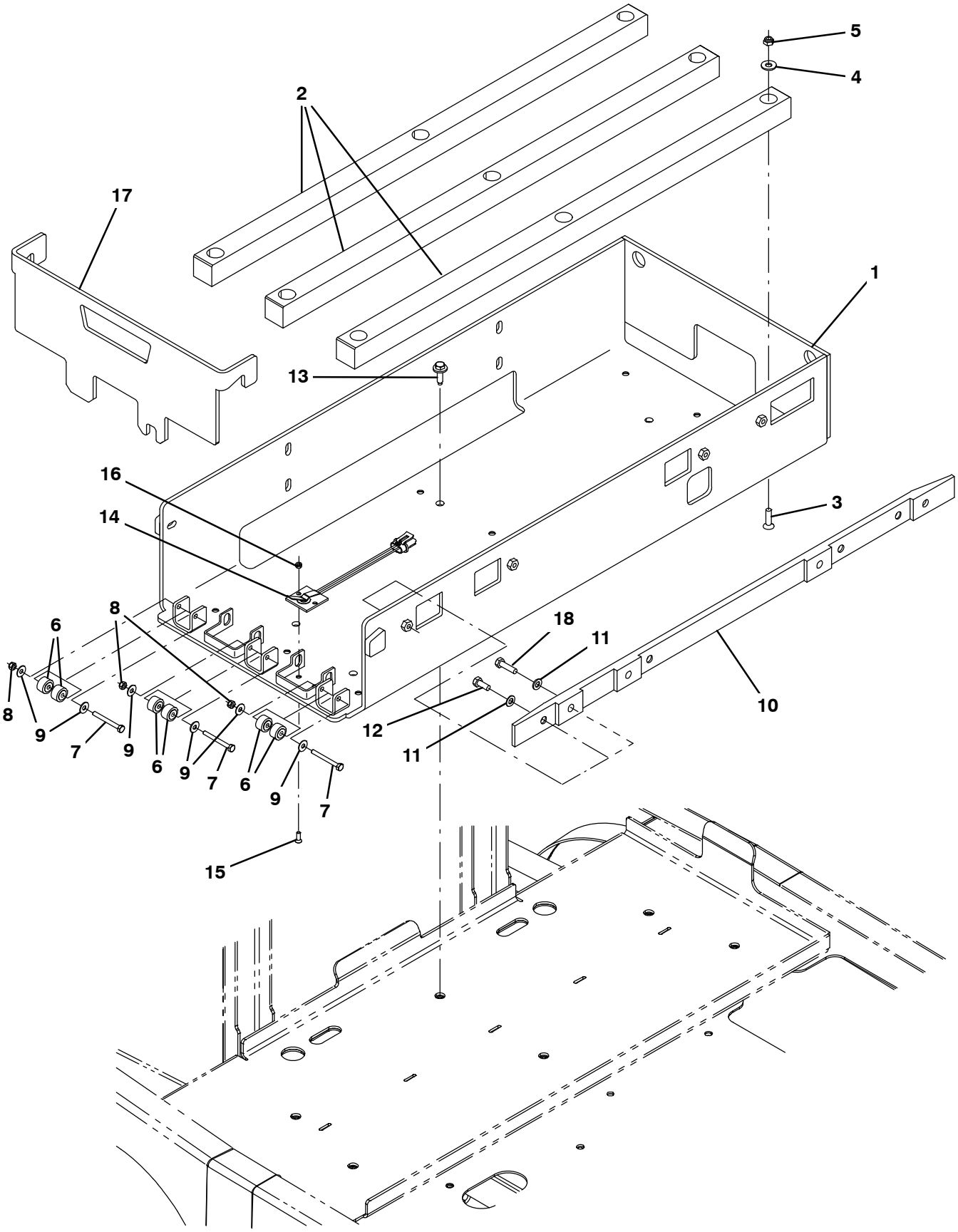

356483

Fig. 39 – Battery Rollout Group

Ref.	Part No.	Serial Number	Description	Qty.
1	1207912	(0000–0399)	Tray Wldt, Ro Battery, [T17]	1
1	1225437	(0400–)	Tray Wldt, Ro Battery, [T17]	1
2	1208527	(0000–)	Plate, Plstc, Bat Rollout	3
3	79506	(0000–)	Screw, Flt, Soc, M8 X 1.25 X 30, Ss	9
4	01685	(0000–)	Washer, Flat, 0.38b 0.88d .08, Ss	9
5	08713	(0000–)	Nut, Hex, Lock, M8 X 1.25, Nl, Ss	9
6	369415	(0000–)	Bearing, Needle, 0.25b 0.88d 0.50w	6
7	58979	(0000–)	Screw, Hex, M6 X 1.00 X 55, Fl, Ss	3
8	08712	(0000–)	Nut, Hex, Lock, M6 X 1.00, Nl, Ss	3
9	01684	(0000–)	Washer, Flat, 0.27b 0.69d .05, Ss	6
10	1209368	(0000–)	Plate, Guide, Battery Rollout [T17]	1
11	39349	(0000–)	Washer, Flat, 0.31, Sae	4
12	09740	(0000–)	Screw, Hex, M8 X 1.25 X 20, Ss (Large Battery)	4
13	1037354	(0000–0399)	Screw, Hex, M8 X 1.25 X 30, 9.8, Sems	6
13	1037355	(0400–)	Screw, Hex, M8 X 1.25 X 35, 9.8, Sems	6
14	1210673	(0000–)	Switch, Limit, N.C. [Cpi, Spst, 280 Mp]	1
15	09120	(0000–)	Screw, Flt, Soc, M5 X 0.80 X 16, 10.9	2
16	06549	(0000–)	Nut, Hex, Lock, M5 X 0.80, Nl	2
17	1208673	(0000–)	Plate, Door, Battery Rollout [T17]	1
18	09010	(0000–)	Screw, Hex, M8 X 1.25 X 25, Ss (Small Battery)	4

Fig. 40 – Battery Group

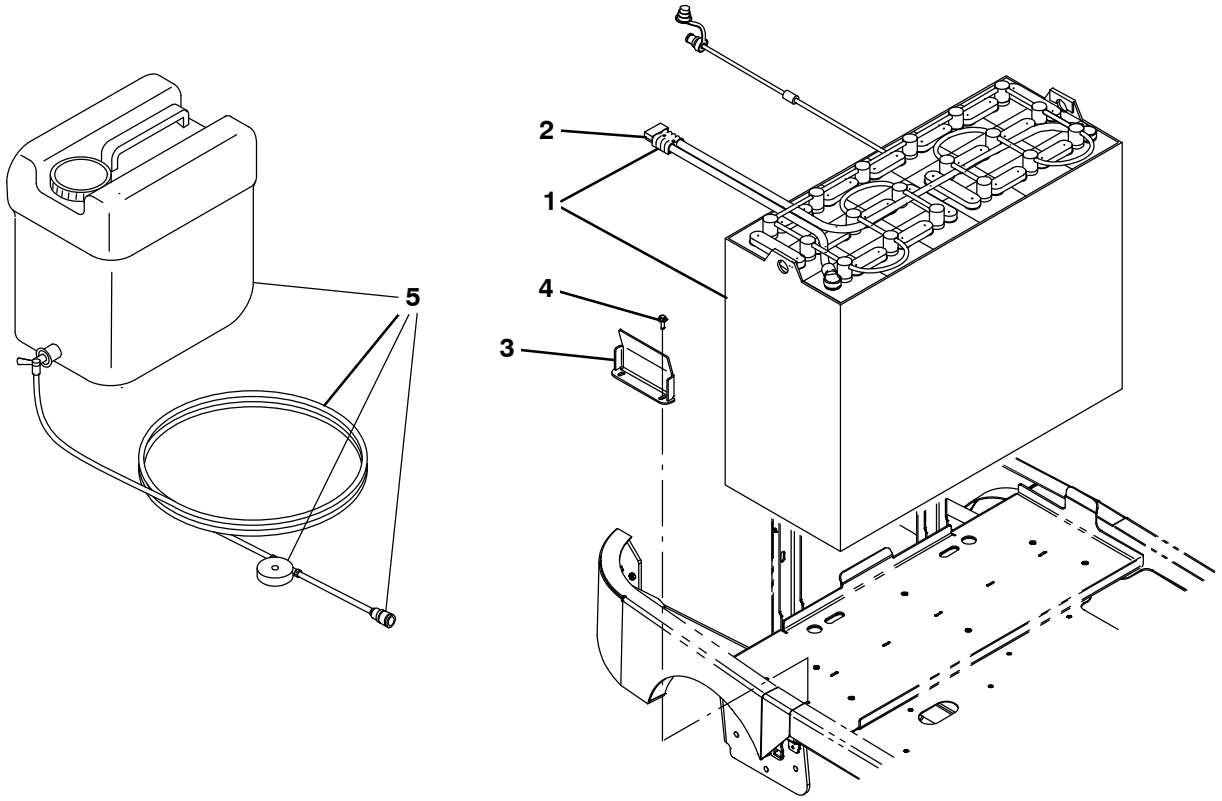

356527– CE

	Ref.	Part No.	Serial Number	Description	Qty.
▽	1	1210977	(0000–)	Battery, Wet, 36Vdc, 625Ah [W/Watering]	
▲	2	01726	(0000–)	Connector, 350a, Gray	1
▽	1	1210978	(0000–)	Battery, Wet, 36Vdc, 775Ah [W/Watering]	
▲	2	01726	(0000–)	Connector, 350a, Gray	1
	3	1206951	(0000–)	Bracket, Front, Battery	1
	4	1037354	(0000–)	Screw, Hex, M8 X 1.25 X 30, 9.8 Sems	2
	5	1072526	(0000–)	Tank, Water, 30.0L, Battery Fill sys	1

Fig. 41 – Battery Charger Group

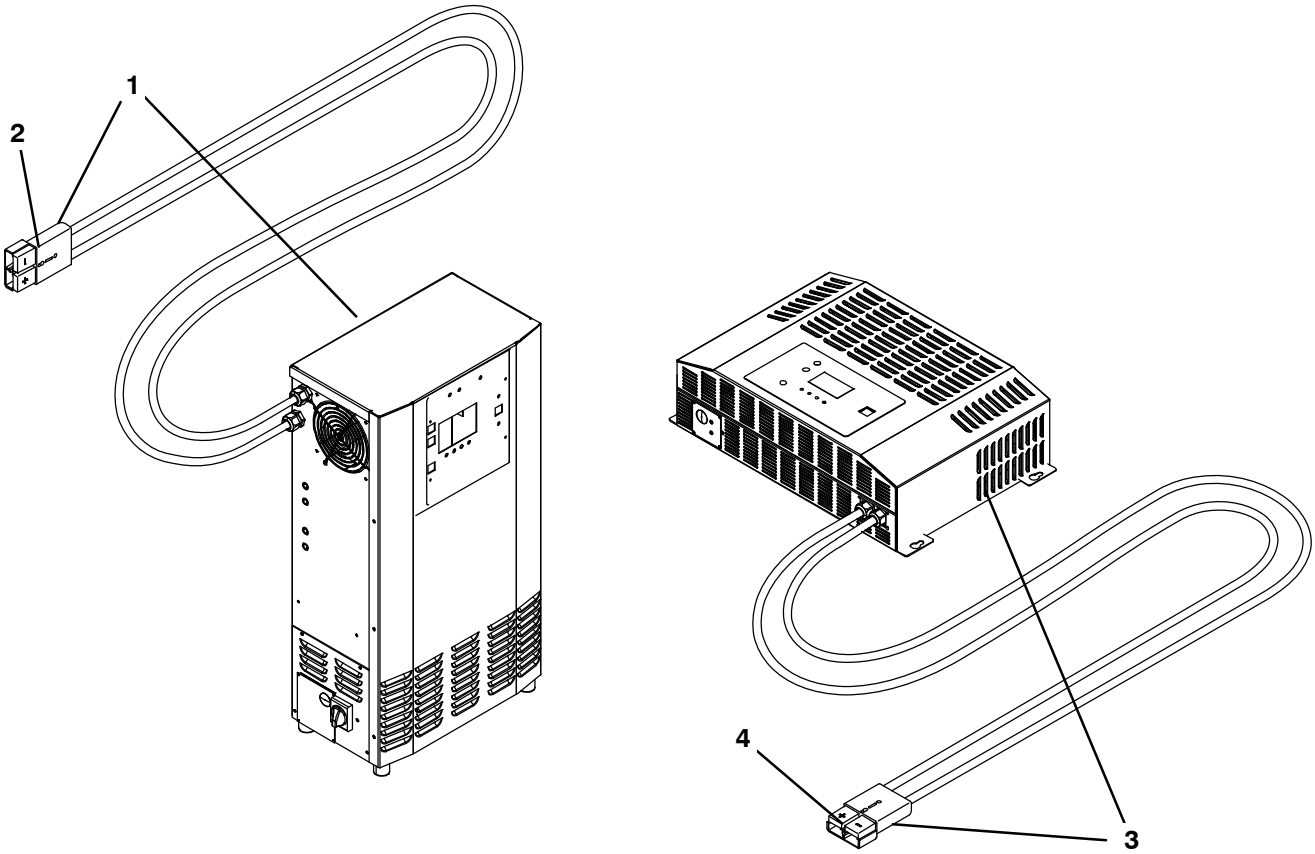

356507 – CE

	Ref.	Part No.	Serial Number	Description	Qty.
▽	1	1207935	(0000–)	Charger, 36Vdc/120A, 380–415Vac 3Ph	1
▲	2	01726	(0000–)	Connector, 350a, Gray	1
▽	1	1217681	(0000–)	Charger, 36Vdc/80A, 380–415Vac 3Ph	1
▲	2	01726	(0000–)	Connector, 350a, Gray	1
▽	3	1212157	(0000–)	Charger, 36Vdc/80A, 200–240Vac 1Ph	1
▲	4	01726	(0000–)	Connector, 350a, Gray	1

Fig. 42 – Ramp Climb Counter Weight Group

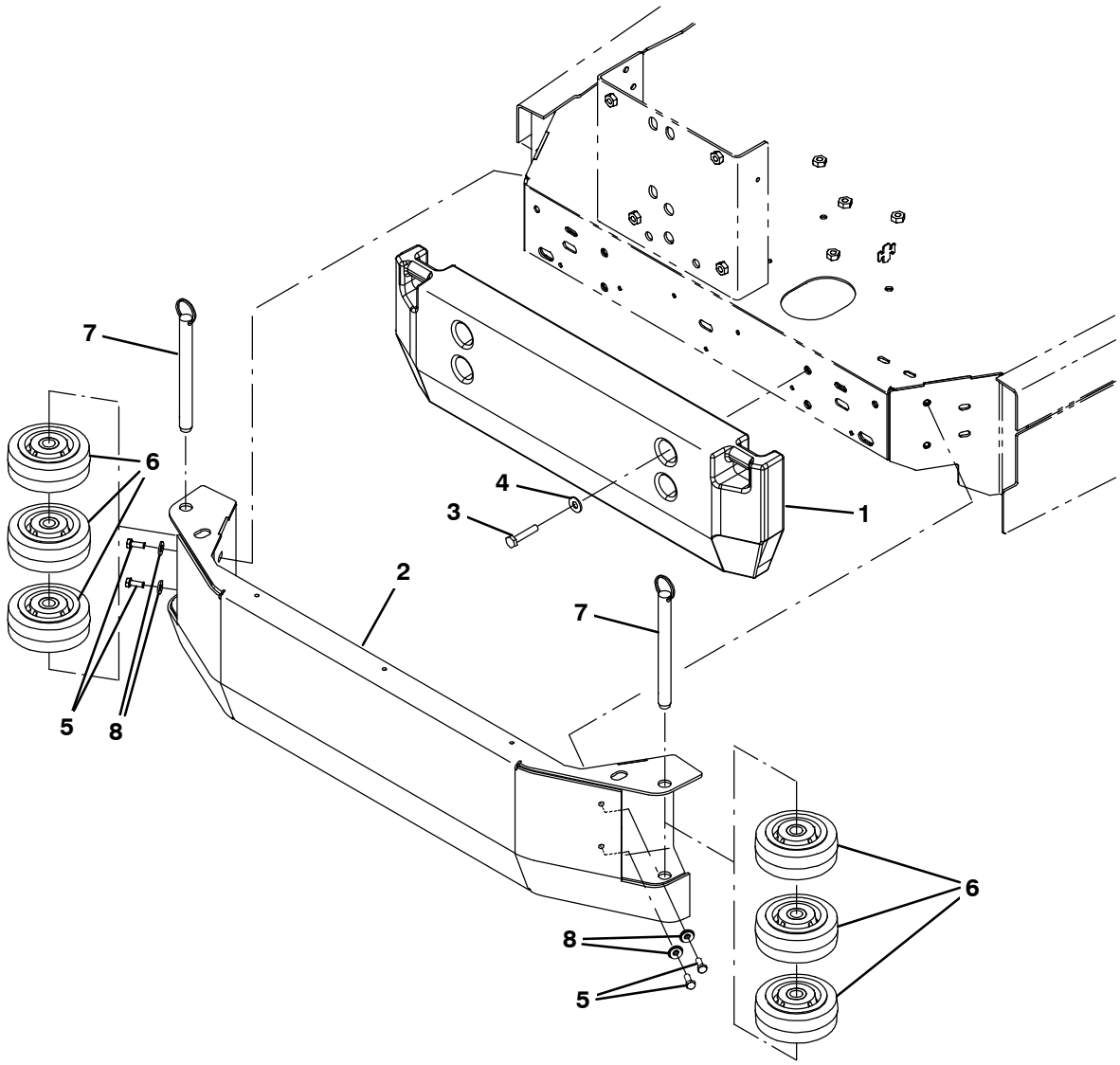

356512

Ref.	Part No.	Serial Number	Description	Qty.
1	1213680	(0000–)	Weight, Counter, Casting, 250Lb, Painted	1
2	1212747	(0000–)	Channel Wldt, Bumper, Ballast	1
3	16930	(0000–)	Screw, Hex, M10 X 1.50 X 50, 8.8	4
4	32492	(0000–)	Washer, Flat, 0.38, Std	4
5	09010	(0000–)	Screw, Hex, M8 X 1.25 X 25, Ss	4
6	1052962	(0000–)	Wheel, 05.0d 2.00w 0.75b, Gray, W/ Bshg	6
7	1206367	(0000–)	Pin, Hitch, .750d X 7.00l, Pl	2
8	1017218	(0000–)	Washer, flat, 0.32B 1.00D .12, Ss	4

Fig. 43 – Documentation Group

Ref.	Part No.	Serial Number		Qty.
	9020190	(0000–)	Manual, Oprtr [T17 Ele, Bg, Ce]	1
	9020180	(0000–)	Manual, Oprtr [T17 Ele, Cz, Ce]	1
	9020169	(0000–)	Manual, Oprtr [T17 Ele, De, Ce]	1
	9020175	(0000–)	Manual, Oprtr [T17 Ele, Dk, Ce]	1
	9020189	(0000–)	Manual, Oprtr [T17 Ele, Ee, Ce]	1
	9020168	(0000–)	Manual, Oprtr [T17 Ele, En, Ce]	1
	9020172	(0000–)	Manual, Oprtr [T17 Ele, Es, Ce]	1
	9020177	(0000–)	Manual, Oprtr [T17 Ele, Fi, Ce]	1
	9020170	(0000–)	Manual, Oprtr [T17 Ele, Fr, Ce]	1
	9020182	(0000–)	Manual, Oprtr [T17 Ele, Gr, Ce]	1
	9020181	(0000–)	Manual, Oprtr [T17 Ele, Hu, Ce]	1
	9020173	(0000–)	Manual, Oprtr [T17 Ele, It, Ce]	1
	9020188	(0000–)	Manual, Oprtr [T17 Ele, Lt, Ce]	1
	9020187	(0000–)	Manual, Oprtr [T17 Ele, Lv, Ce]	1
	9020171	(0000–)	Manual, Oprtr [T17 Ele, Nl, Ce]	1
	9020176	(0000–)	Manual, Oprtr [T17 Ele, No, Ce]	1
	9020179	(0000–)	Manual, Oprtr [T17 Ele, Pl, Ce]	1
	9020178	(0000–)	Manual, Oprtr [T17 Ele, Pt, Ce]	1
	9020191	(0000–)	Manual, Oprtr [T17 Ele, Ro, Ce]	1
	9020183	(0000–)	Manual, Oprtr [T17 Ele, Ru, Ce]	1
	9020174	(0000–)	Manual, Oprtr [T17 Ele, Se, Ce]	1
	9020186	(0000–)	Manual, Oprtr [T17 Ele, Si, Ce]	1
	9020185	(0000–)	Manual, Oprtr [T17 Ele, Sk, Ce]	1
	9020194	(0000–)	Manual, Oprtr [T17 Ele, Hr, Ce]	1
	9020184	(0000–)	Manual, Oprtr [T17 Ele, Tr, Ce]	1
	9020192	(0000–)	Manual, Parts [T17 Ele, En, Ce]	1
	9020167	(0000–)	Manual, Service Info [T17 Ele, En]	1
	9020146	(0000–)	Dvd, Operator [T17]	1
	9020305	(0000–)	Instr, Use&Care, Wallchart [T17]	1

To view, print, order, download the latest Parts manual, other language Operator manuals, and Use and Care Guides (wall charts) visit:

www.tennantco.com/manual

SECTION 4

Contents **Page**

Fig. 1 – ec–H2O Module Assembly Breakdown, 9020260 4-2
Fig. 2 – Accelerator and Brake Pedal Assembly Breakdown, 1209411 4-4
Fig. 3 – Metering Solution Pump Breakdown, 386364 4-5

Fig. 1 – ec–H2O Module Assembly Breakdown, 9020260

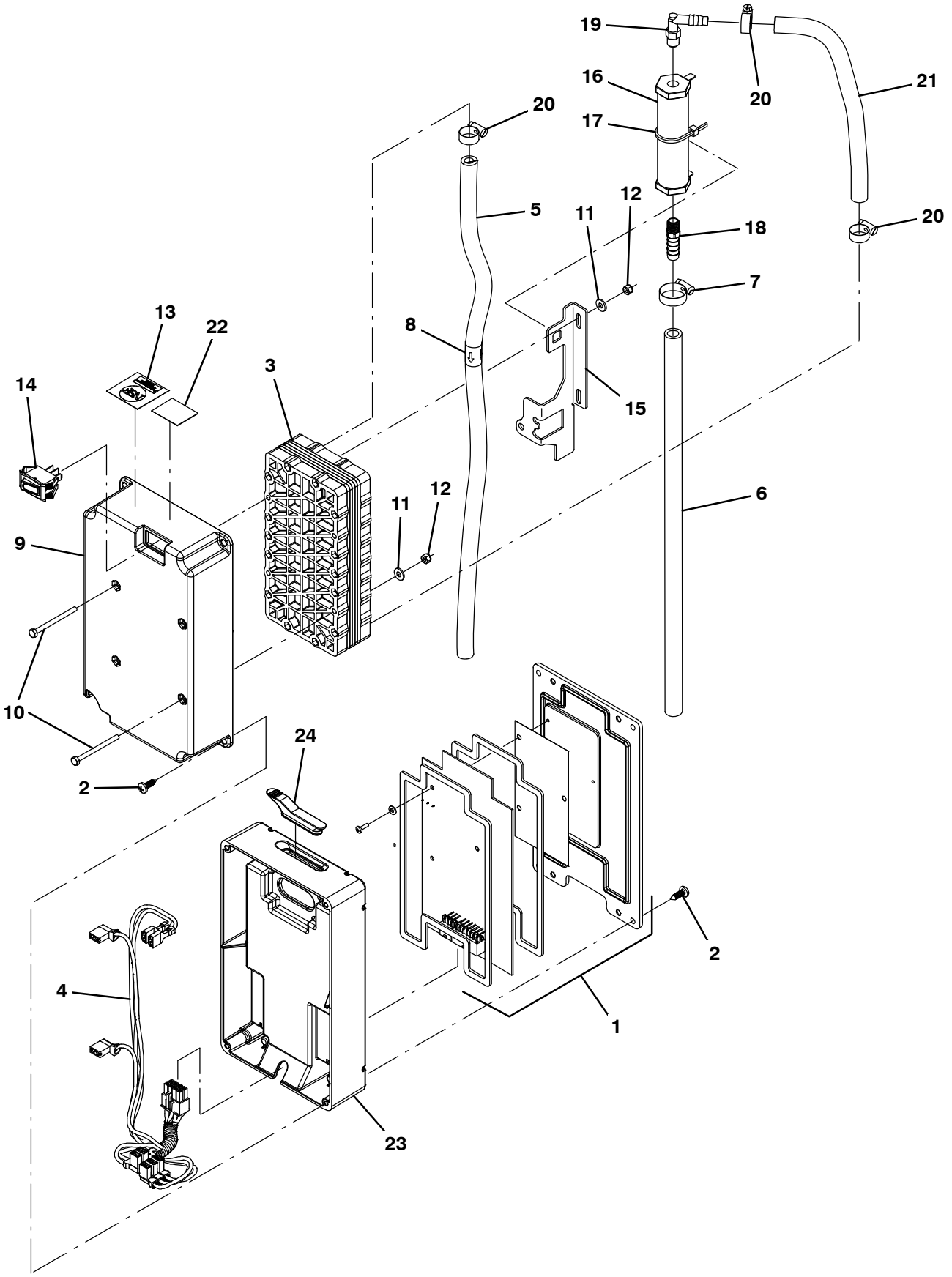

356514

Fig. 1 – ec–H2O Module Assembly Breakdown, 9020260

	Ref.	Part No.	Serial Number	Description	Qty.
▽		9020260	(000000–)	Ec–H2o Module Kit, Afmkt [T17]	1
▲	1	9020261	(000000–)	Circuit Board Kit, Ec–H2o, Afmkt [T17]	1
▲	2	1018155	(000000–)	Screw, Pan, Phl, M5 X 0.80 X 16, Tcut,Ss	8
▲	3	1057637	(000000–)	Electrode, 5 Plate, High Flow	1
▲	4	1069708	(000000–)	Harness, Ele, Ech2o [T12 Module]	1
▲	5	9006268	(000000–)	Hose, Pvc, Brd, 0.38id, 01Ft, Clr	1
▲	6	1014971	(000000–)	Hose, Afmkt, Pvc, Brd, 01Ft, Clr	1
▲	7	54333	(000000–)	Clamp, Hose, Wormdrive, 0.31–0.88d, .31w	1
▲	8	1049637	(000000–)	Label, Direction [Ec–H2o]	1
▲	9	1051519	(000000–)	Housing, Upper, Module, High Flow	1
▲	10	32509	(000000–)	Screw, Hex, M4 X 0.70 X 50, Ss	4
▲	11	41579	(000000–)	Washer, Flat, 08, Ss	4
▲	12	33932	(000000–)	Nut, Hex, Lock, M4 X 0.70, Nl, Ss	4
▲	13	1046041	(000000–)	Label, Module [Nsf, Ec–H2o]	1
▲	14	1044393	(000000–)	Switch, Rocker, Spst, Mom	1
▲	15	1048741	(000000–)	Bracket, Valve, Large	1
▲	16	1062006	(000000–)	Electrode, Cylindrical	1
▲	17	130773	(000000–)	Tie, Cable, Nyl, 11.0l, .14w, 3.0 Max. D	1
▲	18	1055552	(000000–)	Fitting, Brs, Str, Bm06/Pm02	1
▲	19	1051268	(000000–)	Fitting, Plstc, E90, Bm05/Pm02, Nyl	1
▲	20	43844	(000000–)	Clamp, Hose, Wormdrive, 0.25–0.62d, .31w	3
▲	21	1014971	(000000–)	Hose, Afmkt, Pvc, Brd, 01Ft, Clr	1
▲	22	1068763	(000000–)	Label, Date Code [Ec–H2o]	1
▲	23	1037032	(000000–)	Housing, Bottom	1
▲	24	1054776	(000000–)	Grommet, Blind	1

Fig. 2 – Accelerator and Brake Pedal Assembly Breakdown, 1209411

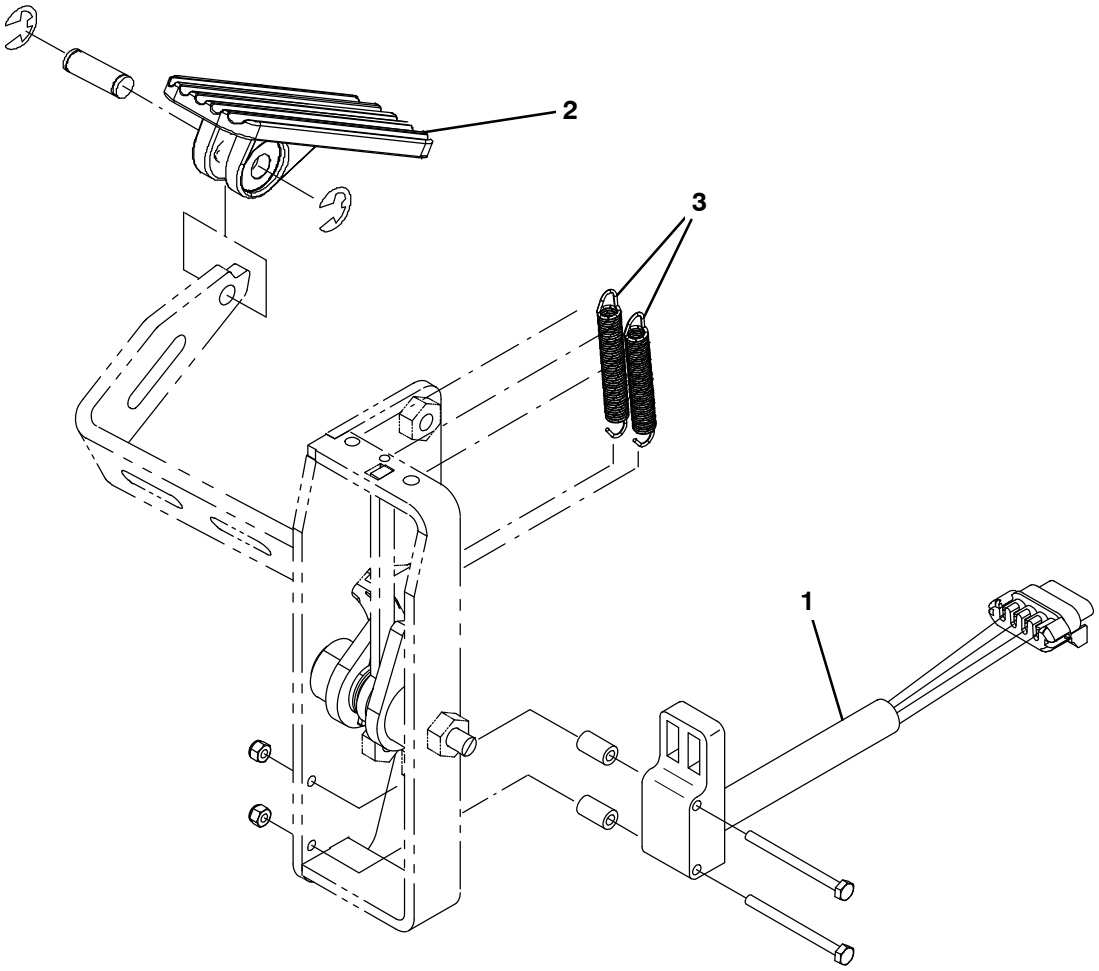

356515

	Ref.	Part No.	Serial Number	Description	Qty.
▽		1209411	(000000–)	Pedal Assy, Accelerator, W/O Brake	1
▲	1	1058687	(000000–)	Sensor, Position [Hall]	1
▲	2	1071311	((000000–)	Pedal, Foot, W/ Tread	1
▲	3	1061049	(000000–)	Spring, Extn, 0.35od 0.05wir 02.8l	2

Fig. 3 – Metering Solution Pump Breakdown, 386364

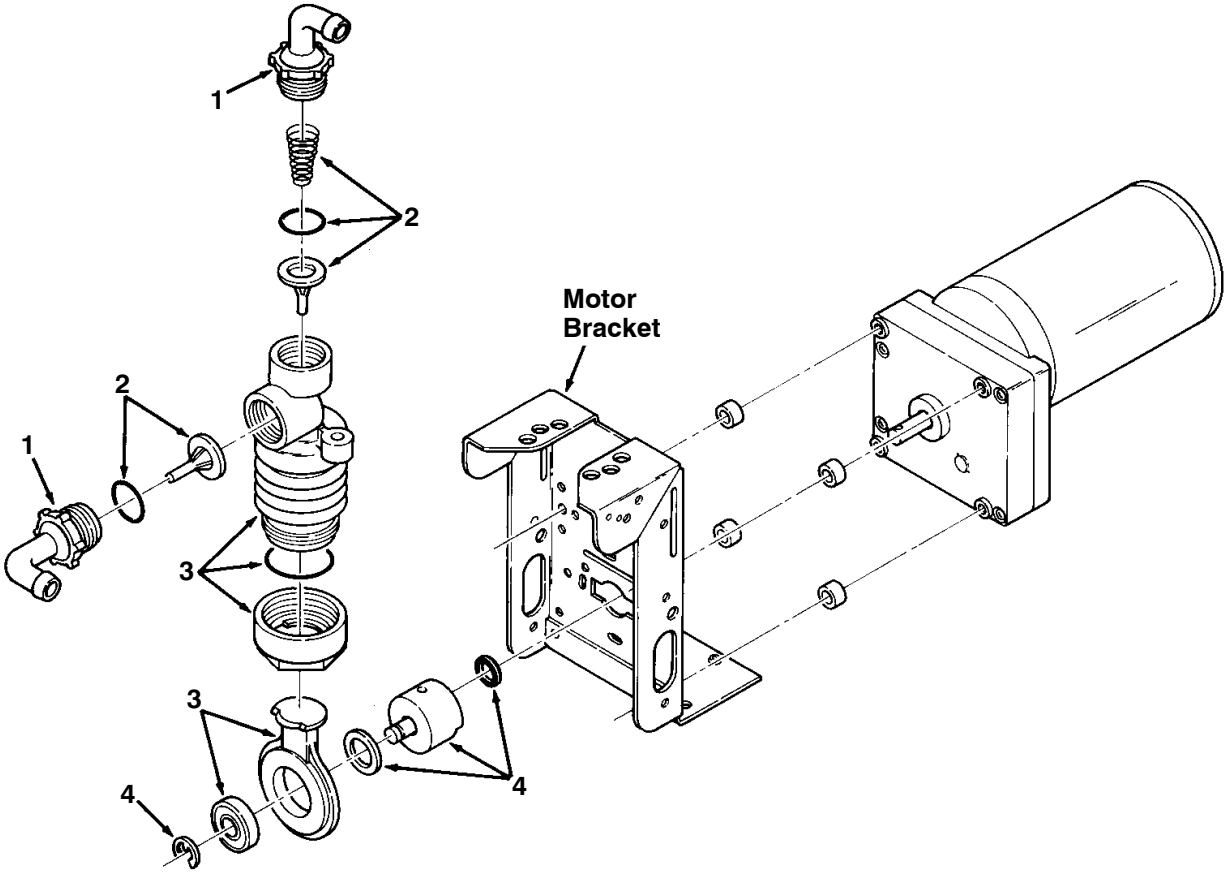

00112

	Ref.	Part No.	Serial Number	Description	Qty.
▽		386364	(000000–)	Pump, Metering Solution	1
▲	1	63923	(000000–)	Connector Kit, Tubing	1
▲	2	21659	(000000–)	Valve Kit, Pump	1
▲	3	21661	(000000–)	Replacement Kit, Bellows	1
▲	4	02430	(000000–)	Crank Replacement Kit	1

SECTION 5

CONTENTS **PAGE**

PART NUMBER TO PAGE NUMBER CROSS REFERENCE LIST 5-2
PART DESCRIPTION TO PAGE NUMBER CROSS REFERENCE LIST 5-9

PART NUMBER TO PAGE NUMBER CROSS REFERENCE LIST

Part Number	Page Number
00911	2-11, 2-37, 3-45, 3-47
00912	2-11
00928	2-33, 3-19
01316	3-57, 3-59
01513	3-45
01516	2-55, 3-45, 3-47
01683	2-25, 2-61, 3-11, 3-61, 3-63, 3-65, 3-67, 3-71, 3-79
01684	2-3, 2-5, 2-7, 2-25, 2-33, 2-37, 2-39, 2-41, 2-53, 2-57, 3-17, 3-19, 3-31, 3-35, 3-41, 3-43, 3-45, 3-49, 3-57, 3-59, 3-79, 3-81
01685	2-7, 2-13, 2-17, 2-19, 2-33, 2-47, 2-49, 3-9, 3-19, 3-31, 3-35, 3-43, 3-49, 3-57, 3-59, 3-61, 3-77, 3-81
01686	2-33, 2-37, 2-39, 2-41, 2-53, 2-55, 2-57, 3-9, 3-17, 3-19, 3-41, 3-43, 3-45, 3-49
01713	2-27
01726	2-61, 3-82, 3-83
01847	3-31, 3-35
02430	4-5
02850	3-41, 3-43
02942	3-29, 3-33, 3-49
03192	3-9
03193	3-9
04051	2-9
04843	2-53
04846	2-11, 2-39, 2-41
04928	2-31
05134	3-61
05685	2-55
05686	2-55, 3-17
06415	2-53
06549	3-5, 3-7, 3-43, 3-79, 3-81
06919	2-61, 3-51
06920	3-3, 3-41
06926	2-61, 3-25, 3-37, 3-51
06927	2-27, 3-13, 3-41, 3-43, 3-79
06933	3-5, 3-7
06934	2-59
06935	3-43
06942	2-17, 2-25, 2-27
06943	3-71, 3-75
06944	2-37
06946	2-27
06948	2-27
06961	2-11
06965	3-75
06969	2-29, 2-31, 2-33
06971	2-35
07259	2-21, 2-23
07450	2-55
07471	2-33
07514	2-61, 3-79
07515	2-25, 2-27, 2-61
07785	3-31, 3-35
07786	2-39, 2-41, 2-57, 3-41, 3-45, 3-49
07787	2-55
07789	3-23
07791	2-11, 3-41
08170	3-45
08175	2-53
08178	2-13, 2-29, 2-53
08179	2-13, 2-53, 3-31, 3-35
08182	2-29
08202	2-29
08236	2-39, 2-41, 2-55
08708	2-27, 2-53, 2-61, 3-41, 3-47, 3-71, 3-75
08709	2-11, 2-59, 3-13, 3-43, 3-71
08711	2-29
08712	2-7, 2-13, 2-31, 2-39, 2-41, 2-53, 3-31, 3-35, 3-43, 3-61, 3-79, 3-81
08713	2-7, 2-39, 2-41, 2-43, 2-47, 2-49, 3-17, 3-31, 3-35, 3-45, 3-47, 3-49, 3-57, 3-59, 3-63, 3-77, 3-81
08714	2-53, 2-55, 2-57, 3-17
08716	2-7, 2-51, 3-45
09005	3-71
09007	2-37, 3-41, 3-43, 3-45, 3-61
09010	2-7, 2-9, 2-13, 2-33, 2-43, 2-47, 2-61, 3-17, 3-21, 3-23, 3-31, 3-35, 3-41, 3-43, 3-49, 3-63, 3-65, 3-81, 3-84
09011	2-7, 2-13, 2-47, 3-17, 3-19, 3-21, 3-61, 3-63
09023	2-7, 3-31, 3-35, 3-45
09028	2-37, 3-43
09120	3-81
09162	2-11
09198	2-3, 2-5
09200	3-65
09291	2-39, 2-41
09570	2-59, 2-62, 3-79
09738	2-37, 2-61, 3-23, 3-65, 3-67
09739	2-39, 2-41, 2-61, 3-61, 3-65, 3-71
09740	2-9, 2-13, 2-59, 2-62, 3-21, 3-45, 3-79, 3-81
09741	2-31
09767	3-45
09770	2-53
09775	2-55
1002898	3-67
1002899	3-67
1005218	3-57, 3-59
1005630	3-23, 3-63, 3-65, 3-67
1006400	3-23, 3-67
1006410	3-61
1008142	3-13
1009356	3-45
1011170	3-67
1011409	2-33, 3-67
1011411	3-67
1011522	3-65
1011719	3-17
1011735	2-15
1011837	3-71
1011885	3-63
10120	2-39, 2-41
1014295	3-73
1014328	2-37, 3-45
1014563	2-53
1014949	3-65, 3-67
1014971	4-3
1014974	3-65
1014976	3-23, 3-65
1014981	3-63
1015025	3-23
1015032	3-61
1015455	3-65
1016331	2-13
1016354	2-33
1016672	2-5
1017218	2-7, 2-9, 2-17, 2-37, 2-43, 2-47, 2-59, 2-62, 3-9, 3-17, 3-19, 3-21, 3-31, 3-35, 3-41, 3-47, 3-49, 3-63, 3-84
1017368	2-5
1017441	3-29, 3-33, 3-49
1017802	3-29, 3-33, 3-49
1018155	4-3
1018276	2-53
1019285	2-47, 3-59, 3-61
1020341	2-7, 2-11, 2-15, 2-17, 2-45, 2-47, 2-49, 2-51, 2-59, 3-5, 3-11, 3-13, 3-29, 3-33, 3-41, 3-43, 3-49, 3-65, 3-71
1022671	3-73
1022846	2-39, 2-41
1023676	2-29
1023677	2-29
1023920	3-43
1024977	3-75
1026014	2-47
1027976	3-71
1028581	3-67
1031413	2-55, 3-17
1034731	2-11, 2-37
1036892	3-41, 3-45
1037032	4-3
1037346	2-7, 3-31, 3-35, 3-71
1037354	3-43, 3-45, 3-81, 3-82
1037355	2-9, 2-17, 3-81
1037822	1-1, 2-47
1037827	2-31
1039392	3-7
1039557	3-65, 3-67

Part Number	Page Number
1039998	2-27
1040467	2-27, 2-61, 3-29, 3-33, 3-41, 3-65, 3-79
1040803	3-47
1040868	3-65
1042499	2-5
1042500	2-5
1042504	2-5
1044393	4-3
1045034	3-57, 3-59
1045041	2-33, 2-35
1045487	2-39, 2-41, 2-43
1045525	2-15, 2-57
1046041	4-3
1048741	4-3
1048955	2-17
1049637	4-3
1050827	2-61
1051027	2-5
1051030	2-3
1051052	2-17, 2-19
1051268	4-3
1051519	4-3
1052010	3-67
1052126	3-11, 3-45
1052532	2-57
1052726	2-15
1052962	2-7, 3-84
1053342	3-45
1053815	3-49
1053825	2-11
1054178	3-71
1054581	3-45
1054591	3-45
1054654	2-11
1054662	3-17
1054776	4-3
1054795	3-23
1054945	2-55
1054948	3-47
1055051	3-45
1055254	3-65
1055396	2-57
1055552	4-3
1056189	3-47
1056412	2-11
1056719	3-71
1056838	2-37
1056979	3-5
1056982	3-71
1057043	2-11
1057171	2-11
1057214	2-47
10575	3-57, 3-59
1057554	2-11
1057572	2-11
1057637	4-3
1057780	2-7
1057785	2-11
1057814	3-71
1057816	3-71
1057978	3-61
1058340	2-61
1058451	3-41
1058477	3-41
1058679	2-15
1058687	4-4
1058694	3-5
1058695	3-43
1058901	3-41
1059073	2-11
1059231	3-65
1059308	3-45
1059342	3-5
1059938	3-5
1060103	3-9
1060128	3-71
1060210	3-49
1060276	3-15
1060394	3-49
1060428	3-71
1060440	3-73
1060673	2-43
1060691	3-73
1060708	3-73
1060718	3-73
1060720	3-73
1060784	3-41
1061049	4-4
1061356	3-73
1061570	3-73
1061571	3-73
1061954	3-61
1062006	4-3
1062106	3-5
1062386	2-21, 2-23
1062403	3-65
1062651	2-43
1062659	3-73
1062813	2-82
10632–18	3-5
10632–2	3-7
1063263	3-5
1063363	3-45
1064184	2-61, 3-3, 3-5, 3-7, 3-25, 3-51, 3-65
1064188	3-3, 3-5, 3-7, 3-11, 3-51, 3-71
1064191	3-5
1065134	2-39, 2-41
1065343	2-82
1066429	2-59
1066431	2-43, 2-51
1066434	2-47
1066919	3-71
1067452	1-1, 3-43
1067526	3-65
1068510	2-61
1068763	4-3
1069311	2-43
1069322	2-15
1069580	3-79
1069671	3-68
1069708	4-3
1069746	3-7
1070324	3-79
1070402	3-79
1070541	3-79
1070658	3-79
1070757	3-79
1071085	2-25, 3-7, 3-21, 3-23, 3-29, 3-31, 3-33, 3-35, 3-63, 3-79
1071311	4-4
1072526	3-82
1072951	2-25
1072952	2-25
1072978	2-61
1072979	2-61
1072980	2-61
1072981	2-61
1072992	3-39
1072999	3-27
1073042	3-54
1073054	3-54
1073059	3-79
1073062	3-15
1073077	3-79
1073078	3-79
1073181	2-11
1074075	3-77
1074103	2-81
1074570	2-27
1074597	2-81
1074600	3-79
1074601	3-79
1074604	2-81
1074713	2-61
1075003	2-15
1075150	2-27
10912	3-43
11329	3-19, 3-45, 3-47, 3-49, 3-57, 3-59
11398	3-29, 3-33, 3-49
11399	2-45, 3-57, 3-59
11531	2-45
11635	3-19
1200149	2-51, 3-43
1200328	3-23, 3-65
1200394	3-71
1200467	3-67
1200634	3-17
1200642	3-73
1201101	3-17
1201149	3-19
1201267	2-51
1201393	3-71
1201423	3-71
1201428	2-19
1201434	2-49, 3-77
1201441	3-67
1201500	3-17, 3-31, 3-35
1201534	2-15
1201609	3-19
1201894	2-17
1202779	2-7
1202860	2-61, 3-25, 3-37, 3-51
1202868	2-9, 2-27, 2-62
1202870	3-3
1202892	3-3
1203454	3-65, 3-67
1203814	3-65
1203848	2-51
1203947	3-71
1203996	3-65, 3-67

Part Number	Page Number
1204024	3-65
1204077	2-9
1204114	2-43
1204170	2-15
1204306	3-11
1204338	3-65, 3-67
1204356	2-33
1204357	2-37
1204396	3-31, 3-35
1204441	2-37
1204458	2-33
1204460	2-33
1204634	2-37
1204637	2-37
1204638	2-37
1204639	2-37
1204640	1-1, 2-37
1204642	2-37
1204643	2-37
1204713	2-31
1204732	2-9
1204774	3-31, 3-35
1204790	2-37
1204791	2-37
1204880	2-37
1204881	2-37
1204919	3-31, 3-35
1204926	3-9
1204954	3-43
1204972	3-9
1204974	3-9
1205010	2-35
1205011	2-35
1205013	3-31, 3-35
1205016	3-31, 3-35
1205048	2-7
1205049	2-47
1205073	2-17
1205131	2-33
1205133	2-31
1205154	2-7
1205257	2-7
1205262	3-11
1205296	2-11
1205299	3-21
1205307	3-19
1205397	2-9
1205402	3-43
1205428	2-45
1205449	3-49
1205547	3-43
1205550	3-43
1205553	2-53
1205565	3-45
1205593	3-43
1205619	3-43
1205797	2-47
1205801	2-51
1205811	2-51, 2-59
1205863	2-7
1205864	2-7
1206060	2-43
1206099	2-49
1206119	2-47
1206138	3-23, 3-65
1206251	2-57
1206303	3-67
1206367	2-7, 3-84
1206370	1-1, 2-49
1206422	3-17
1206424	2-17
1206431	2-61
1206456	3-71
1206470	2-31
1206475	3-19
1206482	3-71
1206485	2-21
1206530	2-57
1206546	2-15
1206589	3-19
1206592	3-19
1206597	3-19
1206598	3-19
1206599	3-19
1206602	3-17
1206722	3-17
1206723	3-17
1206774	2-51, 3-43
1206785	2-17
1206805	3-21
1206809	3-21
1206821	2-55
1206844	2-55
1206865	2-55
1206872	2-53
1206948	2-43
1206951	3-82
1206961	2-47
1207034	2-55
1207039	2-51
1207041	3-41
1207045	3-49
1207047	3-49
1207086	1-1, 2-57
1207087	1-1, 2-57
1207103	2-57
1207108	2-35
1207119	3-41
1207123	3-41
1207126	2-35
1207127	2-35
1207130	2-47
1207131	2-59
1207139	3-29
1207145	2-59
1207151	3-41
1207174	2-13
1207177	2-13
1207184	2-29
1207209	2-47
1207229	2-43
1207269	3-43
1207272	2-43
1207284	3-51, 3-63
1207297	2-25
1207330	3-31
1207341	2-51
1207362	2-59
1207412	3-29, 3-33
1207436	2-29
1207444	3-9
1207466	2-53
1207484	3-43
1207485	3-47
1207486	3-45
1207487	3-45
1207488	3-45, 3-47
1207517	3-73
1207518	2-45
1207550	3-43
1207554	3-35
1207559	3-33
1207562	2-49
1207566	2-13
1207567	2-13
1207571	2-13
1207608	2-57
1207654	2-13
1207656	3-17
1207657	3-21
1207659	3-61
1207661	1-1, 2-57
1207701	3-79
1207718	3-19
1207725	3-9
1207739	2-53
1207750	3-63
1207757	2-53
1207774	3-71
1207777	3-57, 3-59
1207866	3-21
1207887	2-47
1207902	3-75
1207903	2-53
1207911	3-73
1207912	3-81
1207922	2-17
1207935	3-83
1207946	2-59
1207961	3-75
1207981	2-13
1207984	2-29
1208021	3-21
1208043	3-57, 3-59
1208045	2-9
1208053	3-75
1208106	2-29
1208109	3-75
1208113	2-11
1208122	3-11
1208128	3-9
1208153	2-55
1208155	2-55
1208156	2-55
1208162	2-13
1208185	2-15
1208187	2-15
1208188	2-9
1208203	2-29
1208208	2-31
1208217	3-51
1208247	2-53
1208274	2-53
1208356	1-1, 2-57
1208357	1-1, 2-57

Part Number	Page Number
1208358	2-57
1208359	2-57
1208363	2-7
1208364	2-7
1208394	3-41
1208411	2-15
1208412	2-61
1208416	2-15
1208432	3-23
1208433	3-23
1208434	3-23
1208486	2-45
1208512	2-13
1208527	3-81
1208612	2-11
1208625	2-11
1208629	2-57
1208673	3-81
1208691	2-61
1208710	3-9
1208714	3-9
1208730	2-57
1208732	3-63
1208733	3-59
1208748	2-51, 2-59
1208772	3-45
1208858	2-57, 3-31, 3-35
1208899	2-21
1208906	2-57
1208907	3-11
1208971	2-21, 2-23
1208974	2-21, 2-23
1208977	2-21, 2-23
1208983	2-21, 2-23
1208985	2-21, 2-23
1208986	2-21, 2-23
1208987	2-21, 2-23
1208989	2-21, 2-23
1208999	2-21, 2-23
1209015	2-13
1209041	2-61
1209052	2-21, 2-23
1209073	2-21
1209119	3-41
1209120	2-57
1209121	2-57
1209122	2-57
1209140	3-41
1209168	2-21
1209190	2-59
1209194	2-17
1209244	3-31, 3-35
1209246	2-9
1209368	3-81
1209411	2-9, 4-4
1209444	2-27, 2-57
1209652	3-11
1209678	3-17
1209684	2-49
1209712	2-55
1209769	2-31
1209802	3-45
1209915	3-9
1209960	2-21, 2-23
1209964	2-21, 2-23
1209965	2-21, 2-23
1209966	2-21, 2-23
1209968	2-21, 2-23
1209969	2-21, 2-23
1209995	2-21, 2-23
1210022	2-55
1210177	2-31
1210179	2-31, 2-35
1210262	2-31
1210286	2-21, 2-23
1210312	3-17
1210399	2-61, 3-25, 3-37, 3-51
1210430	2-39, 2-41
1210467	2-61
1210581	3-17
1210618	2-35
1210624	2-31
1210630	2-31
1210660	2-33
1210667	2-33
1210673	3-81
1210711	2-7
1210807	2-35, 2-47, 3-17, 3-25, 3-41, 3-51, 3-63, 3-79
1210841	3-57, 3-59
1210969	3-51
1210970	2-61
1210971	2-59
1210977	3-82
1210978	3-82
1211150	3-73
1211399	3-45
1211837	3-49
1211884	2-39, 2-41
1211929	3-41
1211934	2-5, 3-45
1211952	2-21, 2-23
1211963	3-77
1212006	3-77
1212112	2-29
1212157	3-83
1212163	3-19
1212210	3-19
1212211	3-19
1212212	3-19
1212248	2-7
1212298	2-43
1212350	2-7
1212366	3-77
1212400	2-13
1212415	2-17
1212443	3-65
1212623	2-31
1212747	3-84
1212782	2-57
1212823	3-33, 3-49
1212824	3-29, 3-49
1212849	1-1, 2-37
1212887	2-45
1213007	2-39
1213059	2-61
1213060	2-39
1213061	2-39
1213093	2-39, 2-41
1213110	2-47
1213118	3-77
1213161	2-35
1213182	3-77
1213186	3-77
1213200	2-33
1213206	3-77
1213211	1-1, 2-39, 2-41
1213228	2-41
1213229	2-39
1213234	2-41
1213243	2-41
1213244	2-41
1213266	1-1, 2-39, 2-41
1213267	2-39, 2-41
1213317	3-63
1213362	3-77
1213392	3-77
1213444	2-82
1213445	2-82
1213461	2-13
1213513	3-73
1213530	2-57
1213539	2-57
1213680	3-84
1213799	3-73
1213802	3-49
1214093	2-45
1214095	3-57, 3-59
1214173	2-51
1214174	2-51
1214326	3-77
1214337	2-49
1214550	2-62
1214566	2-62
1214622	3-13
1214737	3-13
1216507	2-13
1217187	3-61
1217322	2-23
1217475	2-13
1217573	2-15
1217601	3-13
1217681	3-83
1217751	2-27
1217792	3-13
1218213	2-9
1218383	2-43
1218579	2-13
1218580	2-13
1218920	2-15
1220430	3-57, 3-59
1221161	2-45
1221285	2-7
1221794	2-27
1221952	3-23, 3-65
1222170	3-21
1223623	2-5
1223628	2-5
1223629	2-5
1223630	2-5
1223631	2-5
1223636	2-3
1223637	2-3
1223638	2-3
1223639	2-3

Part Number	Page Number
1224341	2-11
1224454	2-11
1224699	2-11
1224700	2-11
1224776	3-13
1224777	3-13
1224893	2-11
1225419	3-21
1225423	3-31, 3-35
1225425	3-35
1225432	3-31
1225437	3-81
1225439	3-63
1225442	2-27
1225503	2-11
1225506	2-7
1225563	2-23
1226141	2-11
12269	3-45, 3-47
12273	2-37, 2-43, 2-47, 3-9, 3-19, 3-63
12274	3-13
1227455	2-35
1228053	2-23
12309	3-17
12316	3-71
12317	2-55, 3-43, 3-49
12333	2-17, 2-47, 3-77
130773	2-27, 2-51, 3-7, 3-23, 3-63, 3-71, 4-3
13773	2-27
140045	3-75
140324	2-59
140825	2-15, 3-3
140916	3-79
14242	2-29
14529	2-53
14595	2-29
14595–1	2-13
14799	2-11
14838	2-3, 2-5
14877	3-59, 3-61
14953	2-3
14967	2-3
150208	3-65
15047	3-31, 3-35
150538	3-23, 3-65
150713	2-33
15331	2-55
15522	3-47
15539	2-3, 2-5
15675	2-51, 3-19
15678	2-13, 2-25, 2-37, 2-39, 2-41, 2-59
16735	2-11, 2-39, 2-41
16879	2-31
16930	3-84
16931	2-9, 2-11, 3-13
16960	2-21, 2-23
17260	2-3
17261	2-3
17262	2-3
17263	2-3
17404	2-39, 2-41
17461	2-53
18136	3-45
18595	2-45, 3-57, 3-59
19064	3-43
19065	2-27, 3-41
19066	3-5, 3-7
19312	2-7, 2-51, 2-61
19314	2-61
19315	3-5
19324	2-27
19859	2-3
20170	2-27, 2-29
20802	2-51
20944	3-63
20950	3-23, 3-63
20951	3-63
20952	3-63
21196	3-75
21606	2-57
21659	4-5
21661	4-5
222158	2-33
222260	2-31, 3-45
222267	3-5, 3-41
222290	2-15
222460	3-31, 3-35
222470	3-47, 3-49
222496	2-13
222497	2-13
222505	2-11, 3-19
222516	2-7, 3-31, 3-35
222809	3-25
222818	2-37, 3-45
22297	3-77
223054	2-53
223065	2-11, 3-13
223198	2-35
230735	2-47
23446	3-43
24105	3-57, 3-59
24196	3-61
24199	3-79
24265	2-25, 3-11, 3-63
24299	2-3, 2-5
24584	3-71
25735	2-39, 2-41, 2-53
26315	2-21, 2-23
26395–1	3-19
26428	2-11, 2-37
28010	3-45
29570	2-51
29584	2-31, 3-17
30241	2-5
32408	3-47
32483	2-17, 2-21, 2-23, 2-25, 2-27, 2-61, 3-5, 3-13, 3-75, 3-79
32485	2-9, 2-11, 2-13
32486	2-29
32490	2-59, 3-7, 3-23, 3-63, 3-65
32491	2-9, 2-11, 2-29, 2-59, 3-13, 3-43, 3-45
32492	2-9, 2-21, 2-23, 2-51, 3-75, 3-84
32509	4-3
32598	3-71
32720	3-47
32746	2-3, 2-5
32899	2-13, 2-29
32969	2-29
32980	2-27
32984	2-25, 2-27
33295	3-57, 3-59
33401	3-41
33584	3-71
33807	2-62
33925	2-21, 2-23
33930	2-62, 3-17, 3-31, 3-35, 3-79
33932	3-63, 4-3
35843	2-31
360369	2-17, 2-19
360370	2-17, 2-19
360460	2-47
361076	2-15
361144	1-1, 2-15
361339	3-45
363087	2-55
363162	2-57, 3-19, 3-21
363301	3-19
363469	2-39, 2-41
364614	3-41, 3-49
365096	3-57, 3-59
368176	2-21, 2-23
369359	3-75
369415	3-81
369781	3-31, 3-35
370080	2-3
370090	2-3
370092	2-5
370094	2-3
370095	2-3, 2-5
375321	3-57, 3-59
377084	3-3, 3-5, 3-7, 3-51
377349	2-43, 3-61
377364	2-33, 3-19
378951	2-3
379829	2-47, 3-31, 3-35
381502	2-29, 3-45
382224	3-45
382320	2-47, 2-51
383723	3-37
383726	3-25
385685	2-47, 3-59, 3-61
386063	2-27
386088	2-39, 2-41
386230	2-3
386240	2-3
386250	2-3
386257	2-37
386274	2-37
386299	3-17, 3-31, 3-35
386324	2-43
386364	3-63, 4-5
386391	2-39, 2-41
386652	3-61
386807	2-61
386810	2-25, 2-27
386847	2-55
390994	2-43

Part Number	Page Number
391345	2-57
391434	2-53, 3-43
392215	3-47
39239	2-59
39281	2-29
39283	2-9
39285	2-21, 2-23
39308	3-17
39349	2-9, 2-25, 2-27, 2-29, 3-9, 3-13, 3-81
397779	3-45, 3-47, 3-73
397889	3-25, 3-37
397916	2-5
397920	2-3
397980	2-3
398500	3-71
398501	2-15
398526	3-5
398806	2-51, 2-59
41141	2-7, 2-15
41143	2-35
41178	3-43
41185	2-37, 3-45, 3-47
41186	2-33, 2-37, 3-19, 3-45
41358	2-21, 2-23
41359	2-25
41360	3-47
41362	3-47
41410	3-57, 3-59
41430	3-9, 3-75
41437	2-17, 2-19
41579	2-3, 2-5, 4-3
41702	2-61
43555	3-23, 3-65
43844	3-23, 3-63, 3-65, 3-67, 4-3
44906	2-31, 3-17, 3-31, 3-35
46390	2-37
46657	2-13
47388	3-71
48258	3-5
48749	3-47
49177	2-17, 2-19
49263	3-5
49266	3-5
49694	3-31, 3-35
49697	2-37, 3-41
49800	3-41
49826	2-59, 3-9
49891	2-51
49924	3-31, 3-35
50335	2-37
51103	2-53
51338	2-29
51339	2-29
51538	2-39, 2-41
51813	2-57
54333	3-61, 3-71, 4-3
54390	2-29
54400	3-31, 3-35
54577	2-29
54618	3-17
55094	3-21
56166	2-13
57248	3-65
57379	3-57, 3-59
57598	3-31, 3-35
57702	3-75
579211	3-41
58979	3-81
59658	2-13, 2-47, 3-17
59668	2-31
59672	3-31, 3-35
603268	3-41
605070	2-13, 2-29
611221	3-79
630146	2-45
630258	2-29
63244-2	3-57, 3-59
63248-1	2-5
63248-2	2-5
63248-3	2-5
63248-4	2-5
63810	2-33, 2-35, 3-23, 3-57, 3-59, 3-61
63923	4-5
63987-1	3-71
64425	2-39, 2-41
64778	3-71
66211	2-29
66213	2-29
68567	2-35
69234	2-25
69784	3-57, 3-59
69972	3-75
69998	3-17
70158	2-29
70161	2-29
70651	2-11
71274	2-53
71579	2-7
71607	2-39, 2-41
71628	3-61
72968	2-33
73342	3-61
73468	3-61
74440	2-13
74455	2-35, 3-7
76062	2-61
763045	2-7
763064	3-17
763114	2-25, 2-27, 2-61, 3-25, 3-79
76426	3-61
76570	2-59
76653	2-29
769785	3-71
77270	2-13
77272	2-55
77488	2-53
78398	3-59
78840	3-61
78841	3-61
79217	2-55
79273-2	2-45
79497	3-57, 3-59
79506	3-81
80409	3-19
80491	2-39, 2-41
81672	3-31, 3-35
81719	3-43
81884	3-47
82831	2-25
83159	3-5, 3-7
84028	2-33, 2-35
86379	2-61
86508	3-57, 3-59
86773	3-47
87172	2-7
87173	3-67
87419	2-5, 3-29, 3-33, 3-49
9000845	3-5, 3-7
9000879	3-5, 3-7
9006268	4-3
9008155	3-73
9008182	3-3, 3-41
9009990	3-79
9010938	3-17
9010942	2-11
9010943	2-11
9011054	3-17
9013046	2-41
9013047	2-41
9013267	2-21
9013794	3-9
9014285	2-55
9014338	3-61
9014344	3-23
9014662	2-5
9014664	2-5
9014666	2-3
9014994	2-81
9014997	2-23
9014998	2-11
9014999	2-11
9015002	2-61
9015044	2-23
9015045	2-23
9015049	3-13
9015050	3-13
9015632	2-21, 2-23
9020070	2-57
9020080	3-73
9020103	2-19
9020107	3-7
9020109	3-5
9020146	3-85
9020167	3-85
9020168	3-85
9020169	3-85
9020170	3-85
9020171	3-85
9020172	3-85
9020173	3-85
9020174	3-85
9020175	3-85
9020176	3-85
9020177	3-85
9020178	3-85
9020179	3-85
9020180	3-85
9020181	3-85
9020182	3-85
9020183	3-85
9020184	3-85

Part Number	Page Number
9020185	3-85
9020186	3-85
9020187	3-85
9020188	3-85
9020189	3-85
9020190	3-85
9020191	3-85
9020192	3-85
9020194	3-85
9020210	2-43
9020211	2-47
9020214	2-59
9020215	2-35
9020216	2-9
9020217	3-19
9020218	2-51
9020219	3-43
9020220	3-41
9020221	3-49
9020223	2-11
9020226	2-15
9020228	2-61
9020229	2-61, 3-37, 3-51
9020230	3-25
9020231	2-29
9020232	2-55
9020233	1-1, 2-55
9020235	2-37
9020237	1-1, 2-37
9020238	2-33
9020239	2-37
9020240	2-37
9020242	2-33
9020243	2-39
9020244	2-39
9020245	2-37
9020247	3-19
9020248	3-17
9020249	3-17
9020250	2-31
9020251	2-31
9020252	3-71
9020253	2-31
9020255	3-43
9020256	3-43
9020257	3-45
9020260	3-65, 4-3
9020261	4-3
9020263	2-29
9020264	2-29
9020265	2-29
9020266	2-21
9020267	2-21
9020268	3-17
9020269	2-21
9020270	1-1
9020271	1-1
9020272	1-1
9020273	2-7
9020283	2-43
9020285	2-47
9020287	3-63
9020289	2-59
9020305	3-85

PART DESCRIPTION TO PAGE NUMBER CROSS REFERENCE LIST

A

Actuator, 36v, 2.36in Stroke, 2-53
Actuator, 36vdc, 2.08strk, 500lbs, 3-45
Actuator, 36vdc, 2.75strk, 450lb, 3-17, 3-31, 3-35
Actuator, 36vdc, 5.00strk, 1100lb, 2-31
Adapter, Swivel, 1.75, Abs, 3-73
Adaptor, Brush, 2-3, 2-5
Adhesive, Thread, 50.0ml [271red], 2-3
Alarm, 9–48vdc, 95 Db(A) [Ec–H20], 2-15
Alarm, Backup, 12–48vdc, Adj, 3-5
Angle, Latch, 2-17
Angle, Mtg, Antenna, Telem, 3-79
Angle, Mtg, Hopper, 3-43
Angle, Sppt, Seat, 2-17
Angle, Stl, Perforated .03, 2-35
Antenna, Telem, 110 In [Gprs], 3-79
Antenna, Telem, 187 In [Gprs], 3-79
Arm Kit, Sqge, Front, Lh, Afmkt, 2-41
Arm Kit, Sqge, Front, Rh, Afmkt, 2-39
Arm Kit, Sqge, Rear, Lh, Afmkt, 2-41
Arm Kit, Sqge, Rear, Rh, Afmkt, 2-39
Arm Wldt, 2-57
Arm Wldt, Brush, 3-45
Arm Wldt, Front, Lh, 2-41
Arm Wldt, Front, Rh, 2-39
Arm Wldt, Lh, 2-41
Arm Wldt, Lift, 2-31
Arm Wldt, Rear, Lh, 2-41
Arm Wldt, Rear, Rh, 2-39
Arm Wldt, Rh, 2-39
Arm Wldt, Spring, Tension, 3-17
Arm, Brush, Pre–Sweep, Idler, Lh, 3-47
Arm, Spring, Tensioner, 3-17
Assy, Seal, Mtg, Vacfan, 2-51

B

Bag, Vacuum, Paper [1pick=1pkg(=10pc)], 1-1, 3-43
Bar Wldt, Retainer, Sqge, Rear, 2-57
Bar, Rnd, Plastic, 0.31D 08.5L, 2-43
Base, Module, Light, 3-5
Battery, Wet, 36Vdc, 625Ah [W/Watering], 3-82
Battery, Wet, 36Vdc, 775Ah [W/Watering], 3-82
Bearing Assy, W/Shaft, 3-47
Bearing, Ball, 0.24b 0.51d 0.20w [2seal], 3-73
Bearing, Ball, 0.59b 1.26d 0.35w[2seal], 3-47
Bearing, Ball, 0.62b 1.38d 0.43w, 3-45
Bearing, Ball, 0.67b, 1.85d, 0.55w, 2-21, 2-23
Bearing, Ball, 0.79b 1.85d 0.55w, 2-37
Bearing, Ball, 3.74b, 6.69d, 2.19w, 2-21, 2-23
Bearing, Cone, 1.38b 0.71w, 2-29
Bearing, Cup, 2.56d 0.55w, 2-29
Bearing, Flng, 2hole, 0.75b, 2-11
Bearing, Flng, 2hole, 0.75b [Nyl], 2-11, 3-13
Bearing, Flng, 2hole, 1.25b, 2-11
Bearing, Journal, 0.75b 0.88d 0.75l, 2-11
Bearing, Needle, 0.25b 0.88d 0.50w, 3-81
Bearing, Pillowblock, 1.12b, 2-11
Bearing, Split, 1.00b, 2-29, 3-45
Bellcrank, Spring, Machined, 2-31
Belt Kit, Drive, 2-37
Belt Kit, Preswp, Afmkt [T17], 3-45
Belt, Drive, 1-1, 2-37
Belt, Kit, Cyl, Afmkt [T17], 1-1, 2-37
Bezel, Headlight, Lh [W/Inserts], 3-3
Bezel, Headlight, Rh [W/Inserts], 3-3
Blade, Front Squeegee 56.6l (Linard), 1-1, 2-57
Blade, Front Squeegee 56.6l (Urethane), 1-1, 2-57
Blade, Front Squeegee 60.6l (Gum), 2-57
Blade, Rear Squeegee 56.6l (Linatex), 2-57
Blade, Rear Squeegee 60.6l (Gum), 2-57
Blade, Rear Squeegee 60.6l (Linatex), 1-1
Blade, Rear Squeegee 60.6l (Urethane), 1-1, 2-57
Blade, Sqge, Sba, (Gum Rubber), 3-19
Blade, Sqge, Sba, (Urethane), 3-19
Blade, Sqge, Sba, Inner, 3-19
Blade, Sqge, Sba, Inner, (Gum Rubber), 3-19
Blade, Sqge, Sba, Inner, (Urethane), 3-19
Blade, Sqge, Sba, Linatex, 3-19
Blade, Sqge, Side, Linatex, 1-1, 2-39, 2-41
Blade, Sqge, Side, Rubber (Option), 2-39, 2-41
Blade, Sqge, Side, Ure, 1-1
Blade, Sqge, Side, Urethane (Option), 2-39, 2-41
Bolt, Eye, M10 X 1.50 X 064mm, 07.10 Eye, 2-55
Bolt, Eye, M8 X 1.25 X 030mm, 08.00 Eye, 3-17
Bolt, Eye, M8 X 1.25 X 070mm, 05.50 Eye, 2-39, 2-41
Bolt, Shld, .41d X 0.35, M8 X 1.25, 3-71
Boot, Circuitbreaker, 3-5
Boot, Terminal, Battery, 25.4mm, Blk, 3-79
Bracket Weldmt, Mtg, Pump, 3-61
Bracket Wldt, 2-57
Bracket Wldt, Adj, Actuator, 3-45
Bracket Wldt, Brush, Adj, Lh, 3-49
Bracket Wldt, Brush, Adj, Rh, 3-49
Bracket Wldt, Corner, Lh, 3-41
Bracket Wldt, Corner, Rh, 3-41
Bracket Wldt, Deck, 3-19
Bracket Wldt, Lh, Mtg, Door, 2-7
Bracket Wldt, Mgt [T17 Ec–H2o], 3-65
Bracket Wldt, Mount, 3-43
Bracket Wldt, Mtg, Headlight, 3-41
Bracket Wldt, Mtg, Motor, Sba, 3-29
Bracket Wldt, Mtg, Ohg, 3-9
Bracket Wldt, Mtg, Platform, Front, 2-9
Bracket Wldt, Mtg, Platform, Front, Rh, 2-9
Bracket Wldt, Mtg, Telem, 3-79
Bracket Wldt, Pedal Mount, 2-13
Bracket Wldt, Pivot, Sba, 3-31, 3-35
Bracket Wldt, Pivot, Sqge, 2-39, 2-41
Bracket Wldt, Pump, 3-63
Bracket Wldt, Pump, Spray Hose, 3-71
Bracket Wldt, Rh, Mtg, Door, 2-7
Bracket Wldt, Skid, Anti–Roll, 3-21
Bracket Wldt, Sppt, Tank, 2-17
Bracket Wldt, Sqge Lift, Frame, 2-53
Bracket Wldt, Sqge, Sba, 3-19
Bracket Wldt, Step, Sba, 3-21
Bracket Wldt, Support, Brake, 2-13
Bracket, Angle, Keeper, Cable, 3-31, 3-35
Bracket, Arm, Sba, 3-31, 3-35
Bracket, Brake, Front, 2-13
Bracket, Brg, 2-11
Bracket, Brg, Steering, 3-13
Bracket, Bumper, 2-51
Bracket, Bumper, Lh, Squeegee [T17], 3-75
Bracket, Bumper, Rh, Squeegee [T17], 3-75
Bracket, Catch, Cover, Saftey Rod, 3-41
Bracket, Ele, Cb, 2-15
Bracket, Ele, Circuitbreaker, 2-15
Bracket, Front, Battery, 3-82
Bracket, Latch [T17], 2-59
Bracket, Latch, Dbl Scb, Sqge, Side, 2-39, 2-41
Bracket, Latch, Lh, 3-41
Bracket, Latch, Lh Panel [T17], 2-51
Bracket, Latch, Rh, 3-41
Bracket, Mount, Sba Valve, 3-23
Bracket, Mtg, Contactor, 2-61
Bracket, Mtg, Cover, Recvy Tank, 2-47
Bracket, Mtg, Filter Hsg, 2-45
Bracket, Mtg, Fitting, Qdc, 3-57, 3-59
Bracket, Mtg, Ftg, Auto Fill, 3-57, 3-59
Bracket, Mtg, Hose, 2-49
Bracket, Mtg, Steering, 3-11
Bracket, Mtg, Tank, Detergent, 3-63
Bracket, Mtg, Tank, Recvy, Lh, 2-47
Bracket, Mtg, Tank, Recvy, Rh, 2-47
Bracket, Mtg, Tank, Soltn, Front, 2-43
Bracket, Mtg, Tank, Soltn, Rh, 2-43
Bracket, Mtg, Valve, Drain, 3-77
Bracket, Pawl, Handle, 2-43
Bracket, Protector, Float Switch, 2-47, 3-59, 3-61
Bracket, Pump, 3-23, 3-65
Bracket, Retain, Hinge, Cover, 2-47
Bracket, Retainer, Spring, 2-3, 2-5
Bracket, Sppt, Hose, Drain, 2-47
Bracket, Sppt, Motor, 3-13
Bracket, Strainer, Pump, Es, 3-61
Bracket, Valve, Large, 4-3
Brake Assy, Drum, Mech, 07.9d [6600], 2-29
Brake Kit, Repair, 2-29
Brake Rod Kit, Afmkt [T17], 2-29
Brush Assy, Disk, Scb, 16.0d, Heavy Duty Polypropylene, 2-5
Brush Assy, Disk, Scb, 16.0d, Nylon, 2-5
Brush Assy, Disk, Scb, 16.0d, Polypropylene , 2-5
Brush Assy, Disk, Scb, 16.0d, Super Abrasive, 2-5
Brush Assy, Disk, Scb, 20.0d, Nylon, 2-3
Brush Assy, Disk, Scb, 20.0d, Polypropylene, 2-3
Brush Assy, Disk, Scb, 20.0d, Super Abrasive, 2-3

Brush Assy, Disk, Scrub, 16.0 D, Polypropylene (Replaced by 1223623), 2-5
Brush Assy, Disk, Scrub, 16.0D, Heavy Duty Polypropylene (Replaced by 1223628), 2-5
Brush Assy, Disk, Scrub, 16.0D, Nylon (Replaced by 1223631), 2-5
Brush Assy, Disk, Scrub, 16.0D, Super Abrasive (Replaced by 1223630), 2-5
Brush Assy, Disk, Scrub, 20.0 D, Nylon, 2-3
Brush Assy, Disk, Scrub, 20.0 D, Polypropylene, 2-3
Brush Assy, Disk, Scrub, 20.0 D, Super Abrasive, 2-3
Brush Kit, Hub Assy, Drive, Ci [Hdpe In], 2-5
Brush Kit, Hub Assy, Drive, Ci [Hdpe], 2-5
Brush Kit, Hub Assy, Drive, Ci [Uhmw], 2-3
Brush Kit, Motor, Fan, 2-51, 3-43
Brush, Disk, Sweep, 19.0D, Polypropylene, 2-5
Brush, Disk, Swp, 19.0d, Pyp, 3-29, 3-33, 3-49
Brush, Scrub, 39l, 20sr, Nylon, Spl, 2-3
Brush, Scrub, 39l, 20sr, Polypropylene, Spline, 2-3
Brush, Scrub, 39l, 20sr, Super Abrasive, Spline, 2-3
Brush, Sweep, 28L, Wedge, Polypropylene, 2-5
Brush, Swp, 28l, Wedge, Pyp, Spl, 3-45
Bumper Kit, Rear, Afmkt [T17], 2-7
Bumper, Rbr, 1.0d 0.38th .25–20, 2-51
Bumper, Rbr, 1.5d 0.63 0.31h, 3-41, 3-49
Bumper, Strip. 1.0, 2-7
Bumper, Ure, 1.50d 1.25l, 3-75
Busbar, 200a, 2-61
Bushing, Flex, Ure, 3-49
Bushing, Flng, 0.44b 1.25d 0.25l, 2-55
Bushing, Flng, 0.50b 0.59d 0.25l, 3-17
Bushing, Flng, 0.50b 0.59d 0.38l, 2-31
Bushing, Flng, 0.63b 0.72d 0.25l, 2-53
Bushing, Flng, 0.63b 0.75d 0.38l, 2-39, 2-41, 2-53
Bushing, Flng, 0.88b 1.0d 0.37l, 2-31
Bushing, Flng, 0.88b 1.0d 0.50l, 2-31
Bushing, Flng, 1.00b 1.13d 0.75l, 2-13
Bushing, Flng, 1.00b 1.13d 1.00l, 3-17
Bushing, Flng, 1.25b 1.41d 0.50l, 2-31
Bushing, Flng, 1.75b 1.94d 1.50l, 3-17
Bushing, Sleeve, 0.63b 0.72d 0.38l, 2-39, 2-41
Bushing, Sleeve, 1.00b 1.13d 1.750l, Fgl, 3-71
Bushing,Sleeve,Flng0.40b 0.625d 1.62l,Ss, 2-53

C

Cable Assy, 02ga [T18/T17, Propel], 2-27
Cable Assy, 02ga, Power [T18, 2 Cond.], 2-61
Cable Assy, 2ga, Power [T17], 2-61
Cable, 04ga 6.9l Blk [M6 Ring/M6 Ring], 2-61
Cable, 04ga 9.8l Blu [M5 Ring/M6 Ring], 2-61
Cable, 1/0ga 48.2l Blk[M9 Ring/.25 Ring], 3-79
Cable, 2/0ga 61.0Ll Blk[M6 Ring/M9 Ring], 3-79
Cable, Battery, 1/0ga [M8 Ring/M6 Ring], 2-61
Cable, Battery, 1/0ga [Telem, T17], 3-79
Cable, Battery, 2/0ga [M17, Telem], 3-79
Cable, Glv .06d 012.0l .26eye /.26eye, 3-75
Cable, Glv .13d 010.0l .52eye /.52eye, 2-7
Cable, Push / Pull, 052.6L .25–28/.25–28, 2-29
Cable, Ss .12d 22.6l .2clevis / .2clevis, 2-53
Cable, Ss, .09d 10.35l .38eye/M6–1.0, 3-31, 3-35
Cable, Ss, .09d 7.87l .50eye/.50eye, 3-31, 3-35
Cam, Adj, Brush, 2-37
Cam, Rear, 2-57
Cap, Hub, Dust, 2.57d 0.77l, 2-29
Cap, Tank, 3-63
Capacitor, Plug [.01 Uf, 200v], 3-65
Caster Assy, Sq, Rear, Afmkt [T17], 1-1
Caster kit, Rear Squeegee, Am, 2-55
Caster, Assy, Sq, Rear, Afmkt [T17], 2-55
Chain, Double, 3/8 Pitch, Transmission, 2-21, 2-23
Chain, Rlr, 35 X 41 Pitches, 2-11
Channel Assy, Lift, Sba, Afmkt [T17], 3-17
Channel Wldt, Bumper, 2-7
Channel Wldt, Bumper, Ballast, 3-84
Channel Wldt, Sppt, Steering, 2-9
Channel Wldt, Steering, 2-9
Charger, 36Vdc/120A, 380–415Vac 3Ph, 3-83
Charger, 36Vdc/80A, 200–240Vac 1Ph, 3-83
Charger, 36Vdc/80A, 380–415Vac 3Ph, 3-83
Circuit Board Kit, Ec–H2o, Afmkt [T17], 4-3
Circuit Board Kit, H20, Afmkt [T17], 3-37
Circuit Board Kit, H2o, Afmkt [T17], 3-51
Circuit Board Kit, Sba, Afmkt [T17], 3-25
Circuit Board Kit, Scrub, Afmkt [T17], 2-61
Circuit Board Kit, Scrub, Afmkt [T17/M17], 2-61
Circuit Board Kit, Water, Afmkt [t17], 2-61
Circuitbreaker, 02.5a, Resetable, 2-61, 3-3, 3-5, 3-7, 3-25, 3-51, 3-65
Circuitbreaker, 15.0a, Resetable, 3-3, 3-5, 3-11, 3-51, 3-71
Circuitbreaker, 15a, Resetable, 3-7
Circuitbreaker, 20.0a, Resetable, 3-37
Circuitbreaker, 35.0a, Resetable, 3-25
Circuitbreaker, 50.0a, Resetable, 3-51
Circuitbreaker, 60.0a, Resetable, 2-61
Clamp Bracket, Distribution, 2-35
Clamp Wldt, Rear, 2-57
Clamp, Cable, 2-27
Clamp, Cable, Nyl, 0.31d, Blk, 2-59
Clamp, Cable, Nyl, 0.62d, Nat, 3-79
Clamp, Cable, Ss, 0.50d X 0.50w [Insul], 2-33
Clamp, Cable, Stl, 0.56D X 0.38W, 1 Hole, 3-19
Clamp, Cable, Stl, 0.63d X 0.50w, 1hole, 3-71
Clamp, Cable, Stl, 0.75d X 0.75w, 1hole, 2-33
Clamp, Cable, Stl, 0.90D X 0.62W, 1 Hole, 2-62
Clamp, Cable, Stl, 0.90d X 0.62w, 1hole, 2-59, 3-79
Clamp, Cable, Stl, 1.00d X 0.75w, 1hole, 2-25
Clamp, Cable, Stl, 3.25d X 1.00w, 1hole, 2-49
Clamp, Hose, Wormdrive, , 0.25–0.62D, .31W, 3-65
Clamp, Hose, Wormdrive, 0.25–0.62d, .31w, 3-23, 3-63, 3-65, 3-67, 4-3
Clamp, Hose, Wormdrive, 0.31–0.88d, .31w, 3-61, 3-71, 4-3
Clamp, Hose, Wormdrive, 0.56–1.06d, .56w, 2-33, 2-35, 3-23, 3-57, 3-59, 3-61
Clamp, Hose, Wormdrive, 0.81–1.50d, .50w, 2-45, 3-57, 3-59
Clamp, Hose, Wormdrive, 1.06–2.00d, .56w, 2-45
Clamp, Hose, Wormdrive, 1.56–2.50d, .50w, 3-77
Clamp, Hose, Wormdrive, 2.62–3.50d, 3-23
Clamp, Hose, Wormdrive, 4.63–5.50, 0.5w, 2-49, 3-77
Clamp, Hose, Wormdrive, 5.56–6.50d, .56w, 2-51
Clamp, Sppt, Wire, 2-27
Clamp, Valve, U–Bolt, 3-77
Clevis, 0.31d X 0.75l, 2-39, 2-41
Clevis, Adj, 0.25pin, 0.25–28 Rh, Pl, 2-13, 2-29
Clevis, Adj, 0.38pin, 0.31–24, Lh, Pl, 2-29
Clevis, Adj, 0.38pin, 0.31–24, Pl, 2-29
Clip, Grip, Finger, 0.31–0.75d, Nk Pl, 3-43
Clip, Grip, Hose, 0.75 – 1.12, Stl, Blk, Vyl, 3-73
Clip, Tie, 0.25d, Plstc, 2-9, 2-25, 2-27, 2-62, 3-7, 3-21, 3-23, 3-29, 3-31, 3-33, 3-35, 3-63, 3-79
Connector Kit, Tubing, 4-5
Connector, 350a, Gray, 2-61, 3-82, 3-83
Contactor, 36vdc, 100a, Sp, No, 2-25, 2-27
Contactor, 36vdc, 200a, Spst, 2-61
Controlbox Assy, Telem [Int], 3-79
Controller Kit, Steer, Afmkt, 3-13
Controller, Propel [Ac, 36v, 275a], 2-25, 2-27
Controller, Steering, 36v, 3-11, 3-13
Cord, Battery Cover [T17], 2-59
Coupling Wldt, Sqge, Front, 2-55
Coupling Wldt, Sqge, Rear, 2-55
Cover Assy, Battery, Ce [T17], 2-59

Cover Assy, Rec Tank, CE Afmkt [T17], 2-47
Cover Assy, Tank, Sol, Ce Afmkt [T17], 2-43
Cover Kit, Belt, Cyl, Afmkt [T7] (2 Kits Required), 2-37
Cover Wldt, Enclosure, Electrical, 2-62
Cover Wldt, Sba, 3-21
Cover, Belt, 2-37
Cover, Belt, Pre-Sweep, 3-45
Cover, Enclosure, Electrical, 2-61
Cover, Handle, 2-57, 3-31, 3-35
Cover, Module, Light, 3-5
Cover, Motor, Preswp, Afmkt [T17], 3-49
Cover, Motor, Sba, Afmkt[T17], 3-19
Cover, Ohg, Trim, Lh, 3-9
Cover, Ohg, Trim, Rh, 3-9
Cover, Plug, Idler, 2-37
Cover, Presweep (As Trimmed) [T17], 3-41
Cover, Preswp, Afmkt [T17], 3-41
Cover, Side Rh, Afmkt [T17], 2-59
Cover, Side, Lh, Afmkt [T17], 2-51
Cover, Sidebrush, Sweeping, 3-29, 3-33
Cover, Transmission, 2-21, 2-23
Crank Replacement Kit, 4-5
Cuff Assy, Outer, Drain Hose, 2-49
Cuff, Adapter, 1.75 X 2.50, Pvc, 3-73
Cuff, Adapter, 2.75 X 3.00, Pvc, 2-57
Cuff, Hose, 5.0 / 2.0 Id, 3-77

D

Device, Centering, 2-3
Device, Centering, Clip On, Tl [Gf Pp], 2-3, 2-5
Diode, Ele, Plug, 2-15, 3-71
Disk, Driver, Pad, W/ Face, 16.0d, 2-5
Disk, Driver, Pad, W/ Face, 20.0d, 2-3
Disk, Pad Drive, W/ Face, 20d, 2-3
Door Assy, Idler, Cyl, Afmkt [T17] (2 Kits Required), 2-37
Door Wldt, Brush, Lh, 2-7
Door Wldt, Brush, Rh, 2-7
Door Wldt, Mtg, Sba, 3-21
Driver Assy, Pad, 16.0d, 2-5
Driver Assy, Pad, 16D (Replaced by 1223629), 2-5
Driver Assy, Pad, 20.0D, 2-3
Drum, Cable, Lift, 2-53
Dvd, Operator [T17], 3-85

E

Ec-H20 Module Kit, Afmkt [T17] (See Breakdowns), 3-65
Ec-H2o Module Kit, Afmkt [T17], 4-3
Electrode, 5 Plate, High Flow, 4-3
Electrode, Cylindrical, 4-3

F

Fan, Vacuum, 6.6d, 036vdc, 1 Stage [Bpt], 2-51, 3-43
Fastener, 11.00l [Hook & Loop], 2-27, 2-57
Fastener, 8.0l [Hook And Loop], 3-65
Filter, Panl, Dust, 2.0 X 06.1 X 07.6, 1-1, 2-47
Filter, Screen, 080 Mesh, In-Line, 2-45
Filter, Soltn, 080mesh, Pm12 3.2s 17.5l, 3-59
Filterbox Wldt, Presweep, 3-43
Fitting, Brs, E90, Bm06/Pm06, Short, 3-71
Fitting, Brs, E90, Em08/Pm06, 3-71
Fitting, Brs, E90, Pf06/Pm06, Spcl, 3-71
Fitting, Brs, Qdc, Bm12/Qf08, 3-57, 3-59
Fitting, Brs, Qdc, Pf08, 3-57, 3-59
Fitting, Brs, Snubber, Pm02/Pf02, 3-65
Fitting, Brs, Str, Bm06/Pm02, 4-3
Fitting, Brs, Str, Pf06/Pm12, 3-71
Fitting, Brs, Str, Pm02, Plug [Skhd], 3-65
Fitting, Brs, Str, Pm08/Garden Hose, 3-57, 3-59
Fitting, Coupler, Hose, Shank, Fem, 3-77
Fitting, Grease, Str Pm04 .47l, 2-21, 2-23
Fitting, Pipe, Plug, Pm08, Sq Head, 3-57
Fitting, Plstc, E45, Pf12/Pf12, 3-57, 3-59
Fitting, Plstc, E90, Bm04 Cplg Male, 3-65
Fitting, Plstc, E90, Bm04/Pm04, Nyl, 3-67
Fitting, Plstc, E90, Bm05/Pm02, Nyl, 4-3
Fitting, Plstc, E90, Bm06/Bm06, 3-63
Fitting, Plstc, E90, Bm06/Pm04, Nyl, 3-65
Fitting, Plstc, E90, Bm06/Pm06, Nyl, 3-23, 3-63, 3-65, 3-67
Fitting, Plstc, E90, Bm08/Bm08, 3-71
Fitting, Plstc, E90, Bm08/Pm06, 3-71
Fitting, Plstc, E90, Bm10/Pm06, 3-23
Fitting, Plstc, E90, Bm10/Pm12, 3-61
Fitting, Plstc, E90, Bm12/Pm08, 3-57, 3-59
Fitting, Plstc, E90, Bm12/Pm12, 3-59, 3-61
Fitting, Plstc, E90, Bm16/Pf8, 3-57, 3-59
Fitting, Plstc, E90, Bm16/Pm12, 2-45, 3-57, 3-59
Fitting, Plstc, E90, Bm16/Pm16, 2-45
Fitting, Plstc, Pf04/Pf04/Pf04, 3-67
Fitting, Plstc, Pf12/Pf12, Bh, 2-43, 3-61
Fitting, Plstc, Rst, 3-67
Fitting, Plstc, Rst, Main Head, 3-67
Fitting, Plstc, Str, Bm04, Cplg, Male, 3-65, 3-67
Fitting, Plstc, Str, Bm04, Cplg,Fem[Tco], 3-67
Fitting, Plstc, Str, Bm04/Bm06, 3-65, 3-67
Fitting, Plstc, Str, Bm05, Cplg, Fem, 3-65, 3-67
Fitting, Plstc, Str, Bm06, Cplg, Fem, 3-65, 3-67
Fitting, Plstc, Str, Bm06, Cplg, Male, 3-65
Fitting, Plstc, Str, Bm06/Bm06, 3-23, 3-63
Fitting, Plstc, Str, Bm06/Pm06, 3-23, 3-65
Fitting, Plstc, Str, Bm10/Pm12 [Nylon], 3-61
Fitting, Plstc, Str, Bm12/Pm08, Nyl, 3-59
Fitting, Plstc, Str, Bm12/Pm12, 2-45
Fitting, Plstc, Str, Bm16/Pm12, 3-57, 3-59
Fitting, Plstc, Str, Pf12/Pf12, 3-61
Fitting, Plstc, Str, Pm04, Cplg,Mal[Tco], 3-67
Fitting, Plstc, Str, Pm04/Pm04, 3-67
Fitting, Plstc, Str, Pm08/Pm08, 3-57, 3-59
Fitting, Plstc, Str, Pm08/Pm12, Nyl, 3-57, 3-59
Fitting, Plstc, Str, Pm12/Pm12 Close, 3-57, 3-59
Fitting, Plstc, Tee, Bm04/Bm04/Bm04, 2-33
Fitting, Plstc, Tee, Bm06/Bm06/Bm06, 3-67
Fitting, Plstc, Tee, Bm16/Pf12/Bm16, Br, 3-57, 3-59
Fitting, Plstc, Tee, Pf08/Pf08/Pf08, 3-57, 3-59
Fitting, Plug, Pm06, Hdpe, 2-45
Fitting, Stl, Pm04/Pm02/Pm04/Pm02, Spcl, 3-65
Fitting, Stl, Str, Bm06/Pm06, Swivel, 3-71
Fitting, Swivel, Str, Pf06/Pm06, Brs, 3-71
Flap, Resistor, Check Valve, 3-61
Flapper, Valve, Pump, Water, 3-61
Frame Wldt, Brush, Pre-Sweep, 3-43
Frame Wldt, Main [T17], 2-7
Fuse, 002a, 250vdc, Cartridge, 3-79
Fuse, 100a, 0.88 2.4l, 125volt, 2-61
Fuse, 150a, 0.88 2.4l [Slo-Blo], 2-61

G

Gasket, .25 1.88d 1.0id [Poron], 3-61
Gasket, .75, 03.94w 04.92l, Adh[Nitrile], 3-43
Gasket, .75, 03.94w 08.58l, Adh[Nitrile], 3-41
Gasket, Base, Module, 3-5
Gasket, Belt, Cover, 2-37
Gasket, Box, Filter, 3-41
Gasket, Steering, Transmission, 2-21, 2-23
Gasket, Ure, .16, 3.23id 3.63od, 2-57
Grip, Handle, Valve, 3-77
Grip, Lock, 2-57
Grommet, Blind, 4-3
Grommet, Pye, 0.37id, F/1.5h, .13 Matl, 3-63
Grommet, Rbr, 0.62id, F/0.9h, .12 Matl, 3-7
Grommet, Rbr, 0.69Id, F/1.0H, .25 Matl, 3-5
Grommet, Rbr, 1.31id, F/1.6h, .12 Matl, 2-9
Guard Wldt, Top, Ohg, 3-9
Guard, Light, Revl / Strobe, 3-7
Guide, Cable, Sqge Lift, 2-53
Guide, Sqge, Side, 2-39, 2-41

H

Handle, 2-43
Handle Kit, Wand, Afmkt, 3-73
Handle, Door, 3-43
Handle, Panel, 2-15
Handle, Valve, 3-77
Harness Kit, Main, Afmkt [T17], 2-81
Harness, Cable, Propel Motor [T17] (Replaced by 9015274), 2-25
Harness, Ele , [Side Sweep, T17], 3-39
Harness, Ele [Can Adaptor, T17], 2-81

Harness, Ele [Ec-H20, T12], 3-68
Harness, Ele [Power Steering, T17], 3-15
Harness, Ele [Presweep, Base, T17], 3-54
Harness, Ele [Presweep, Head, T17], 3-54
Harness, Ele [Side Scrub, T17], 3-27
Harness, Ele [Telemetry, T17], 3-79
Harness, Ele, Ech2o [T12 Module], 4-3
Harness, Ele, Main, 2-81
Harness, Ele, Ohg [T12], 3-7
Harness, Ele, Propel Motor [M17, T17], 2-27
Harness, Ele, Propel Motor [T17] (Replaced by 9015274), 2-25
Harness, Ele, Scrub motors [T17, Ferrite], 2-81
Harness, Wire, Alarm / Light [T16], 3-5
Head Wldt, Disk, 2-33
Hinge Wldt, [T12], 2-51, 2-59
Hinge Wldt, Cover, Battery [T17], 2-59
Hinge Wldt, Rh [T17], 2-59
Hinge, .25pin .07 2.5w 16.0l, Pl, 3-41
Hinge, Wldt, Lh, 2-51
Holder Wldt, Blade, Lh, 2-41
Holder Wldt, Blade, Rh, 2-39
Hook Wldt, latch, 2-37
Hopper, Debris, Trimmed, 2-35
Hopper, Pre-Sweep, Rm-Cptl, Trimmed, 3-43
Hopper, Preswp, Afmkt [T17], 3-43
Horn, 36vdc, 110dba, 2-7
Hose Assy, Drain, 3.0 Id 35 L, 1-1, 2-49
Hose Assy, Drain, 3.0 Id 64 L, 2-49
Hose Assy, Rear Squeegee, 1-1, 2-57
Hose Assy, Sqge, W/2cuff, 3-73
Hose Assy, W/1 Cuff, 2.0 Id 120.0 L, 3-77
Hose Kit, Brush, Side [T17], 3-23
Hose Kit, Spray, Afmkt [T17], 3-71
Hose Trap Assy, 2-57
Hose, Afmkt, Pvc, Brd, 0.25Id, 01Ft, 2-33, 3-67
Hose, Afmkt, Pvc, Brd, 0.25Id, 03Ft, 3-65, 3-67
Hose, Afmkt, Pvc, Brd, 0.25Id, 08Ft, 3-67
Hose, Afmkt, Pvc, Brd, 0.25id, 08ft, Clr, 3-65
Hose, Afmkt, Pvc, Brd, 0.38id, 02ft, Clr, 3-65
Hose, Afmkt, Pvc, Brd, 0.38id, 03ft, Clr, 3-23, 3-67
Hose, Afmkt, Pvc, Brd, 0.38id, 08ft, Clr, 3-23, 3-65
Hose, Afmkt, Pvc, Brd, 0.38id, 20ft, Clr, 3-63
Hose, Afmkt, Pvc, Brd, 0.50id, 12ft, Clr, 3-71
Hose, Afmkt, Pvc, Brd, 0.62id, 02ft, Clr, 3-23
Hose, Afmkt, Pvc, Brd, 0.62id, 08ft, Clr, 3-61
Hose, Afmkt, Pvc, Brd, 0.75id, 03ft, Clr, 3-61
Hose, Afmkt, Pvc, Brd, 01Ft, Clr, 4-3
Hose, Afmkt, Pvc, Wir, 0.75 Id, 03Ft, Clr, 2-33
Hose, Afmkt, Pvc, Wir, 0.75id, 03ft, Clr, 2-35
Hose, Afmkt, Pvc, Wir, 0.75id, 08ft, Clr, 3-57, 3-59
Hose, Afmkt, Pvc, Wir, 1.00Id, 01Ft, Clr, 2-45
Hose, Afmkt, Pvc, Wir,1.00 Id, 03ft, Clr, 3-57, 3-59
Hose, Pvc, Brd, 0.38id, 01Ft, Clr, 4-3
Housing Wldt, Brg, Pre-Sweep, 3-45
Housing Wldt, Pivot, 3-49
Housing Wldt, Sba, Lh, 3-35
Housing Wldt, Sba, Rh, 3-31
Housing Wldt, Scb, Cyl, 2-35
Housing, Bottom, 4-3
Housing, Flng, Brg, 3-47
Housing, Input [As Machined], 2-21, 2-23
Housing, Output, Machined, 2-21, 2-23
Housing, Sqge, Holder, Wheel, F/609648, 3-73
Housing, Upper, Module, High Flow, 4-3
Hub, Drive, Brush, Disk, 0.75b [6t], 2-33, 3-19
Hub, Drive, Brush, Disk, 3 Hole 5.8Bc, 2-5

I

Inductor, 12.7Mm [156 Imp At 25Mhz], 3-11, 3-45
Inductor, 32.5mml [Ferrite 25-300mhz], 2-27
Inductor, 36.2 Mml, Rnd [Ferrite 1-300Hz], 3-15
Inductor, Ferrite [spit Case, 220@100Hz], 3-49
Instr, Use&Care, Wallchart [T17], 3-85

K

Key, Ignition, Sgl, 1-1, 2-15
Key, Sq, 0.19 X 0.19, 0.75l, 2-37, 3-45, 3-47
Key, Sq, 0.19 X 0.19, 1.00l, 2-11
Key, Sq, 0.25 X 0.25, 1.00l, 2-33, 3-19
Key, Sq, 05mm X 05mm, 25mml, 2-37, 3-45
Keychain, Rectangle, Parts & Service, 2-15
Knob Assy, Star, 3.21d 5ear M8, 3-47
Knob, Adj, Caster, 2-55
Knob, Caster, 2-55
Knob, Star,, 3-73
Knob, Star, 1.50d 0.88l 3ear M8x1.25 Fem, 3-47, 3-49
Knob, Star, 3.21d 5ear 4.45l M10x1.5, 2-55
Knob, Star, 3.21d 5ear M10, 2-55

L

Label Kit, Info/Hzrd Polycarb Ce [T17], 2-82
Label Set, Info/Hzrd Viynl Ce [T17], 2-82
Label, Circuit Breaker, 2-15, 2-61
Label, Circuitbreaker, Steering, 2-15
Label, Date Code [Ec-H2o], 4-3
Label, Direction [Ec-H2o], 4-3
Label, Hole, Cover, Recvy Tank, 2-47
Label, Logo, 05.75l 2color [Es], 2-82
Label, Logo, 12.3l 4color [Ec-H2o], 2-82
Label, Module [Nsf, Ec-H2o], 4-3
Label, Opertnl, Console, Lh, 2-15
Label, Opertnl, Console, Rh, 2-15
Label, Opertnl, Console, Rh, W/Pre-Sweep, 3-51
Label, Opertnl, Telem [Fcc/Ic], 3-79
Label, Opertnl, Vacuum Wand Handle, 3-73
Lamp, Bulb, Strobe, 3-5, 3-7
Latch, 2-37, 2-51, 2-59
Latch W/ Keeper, 3-41
Latch, Cmpr, Yel Grip, 2-39, 2-41
Latch, Compression, Sqge, Sba, 3-19
Lens, Amb, F/ Revl / Flasher, 3-5, 3-7
Lens, Blu, F/ Revl / Flasher, 3-5, 3-7
Lens, Red, F/ Revl / Flasher, 3-5, 3-7
Lever Wldt, Adj, Sba, 3-31, 3-35
Lever Wldt, Sqge Lift, Pulley, 2-53
Lift Wldt, Sqge, Pulley, 2-53
Light Assy, Led, 3-5
Light Assy, Pre-Sweep, Afmkt, 3-3, 3-41
Light Kit, Strobe, Module CI [T17], 3-5
Light Kit, Strobe, Ohg, Ci [T17], 3-7
Light, Strobe, Amb, 12-48vdc, Rwk, 3-5, 3-7
Link Assy, Lift, Head, Afmkt [T17], 2-31
Link Kit, Sq, Rear, 1 Link, Afmkt [T17], 2-55
Link Kit, Upper, Sba, Afmkt [T17], 3-17
Link Wldt, Brake, 2-13
Link, Chain, Rlr, 35, 2-11
Lip, Tray, Debris, 2-35

M

Magnet, Latch, Brush Door, 2-7
Manifold, Bar, Spray, 2-35
Manifold, Sba, 3-23
Manifold, Soltn, 2-33
Manifold, Solution Delivery, Main, 2-45
Manual, Oprtr [T17 Ele, Bg, Ce], 3-85
Manual, Oprtr [T17 Ele, Cz, Ce], 3-85
Manual, Oprtr [T17 Ele, De, Ce], 3-85
Manual, Oprtr [T17 Ele, Dk, Ce], 3-85
Manual, Oprtr [T17 Ele, Ee, Ce], 3-85
Manual, Oprtr [T17 Ele, En, Ce], 3-85
Manual, Oprtr [T17 Ele, Es, Ce], 3-85
Manual, Oprtr [T17 Ele, Fi, Ce], 3-85
Manual, Oprtr [T17 Ele, Fr, Ce], 3-85
Manual, Oprtr [T17 Ele, Gr, Ce], 3-85
Manual, Oprtr [T17 Ele, Hr, Ce], 3-85
Manual, Oprtr [T17 Ele, Hu, Ce], 3-85
Manual, Oprtr [T17 Ele, It, Ce], 3-85
Manual, Oprtr [T17 Ele, Lt, Ce], 3-85
Manual, Oprtr [T17 Ele, Lv, Ce], 3-85
Manual, Oprtr [T17 Ele, Nl, Ce], 3-85
Manual, Oprtr [T17 Ele, No, Ce], 3-85
Manual, Oprtr [T17 Ele, Pl, Ce], 3-85
Manual, Oprtr [T17 Ele, Pt, Ce], 3-85
Manual, Oprtr [T17 Ele, Ro, Ce], 3-85
Manual, Oprtr [T17 Ele, Ru, Ce], 3-85
Manual, Oprtr [T17 Ele, Se, Ce], 3-85
Manual, Oprtr [T17 Ele, Si, Ce], 3-85
Manual, Oprtr [T17 Ele, Sk, Ce], 3-85
Manual, Oprtr [T17 Ele, Tr, Ce], 3-85
Manual, Parts [T17 Ele, En, Ce], 3-85
Manual, Service Info [T17 Ele, En], 3-85
Marker, Corner, 3-49

Mesh Assy, Cloth [T17], 2-43
Mess Assy, Cloth, 3-73
Molding, Afmkt, Trim, Pvc, .00 .06, 03ft, 2-61
Motor Assy Kit, Steering, Afmkt [M17], 3-13
Motor Assy, Cyl, Afmkt [T17], 2-37
Motor Assy, Disk, Afmkt [T17], 2-33
Motor Assy, Steering, Power, 12v, 3-11
Motor Assy, Steering, Power, 36v, 3-13
Motor Replmt kit, Drive [T17], 2-21
Motor Rplmt Kit, Drive [M17], 2-23
Motor, Ele, 36 Vdc, 350 Rpm 1.25 Hp Gear, 3-19
Motor, Ele, 36vdc 0.08hp 0068rpm Gear Lh, 3-33, 3-49
Motor, Ele, 36vdc 0.08hp 0068rpm Gear Rh, 3-29, 3-49
Motor, Ele, 36vdc 1750rpm 1.00hp 22.0a, 3-45
Motor, Ele, 36vdc, 1750 Rpm 1.5hp, 2-37
Motor, Ele, 36vdc, 350 Rpm 1.5hp Gear, 2-33
Mount Wldt, Motor, Sba, 3-33
Muffler, Vacfan, 11.0 L, 2-51

N

Nameplate, Tennant, Domed, 2-9
Nozzle, Spray, Gun, 3-71
Nut, Compression, 2.25–12, Abs, 3-73
Nut, Hex, Flng, M5 X 0.80, 3-23
Nut, Hex, Flng, M8 X 1.25, 2-11, 3-41
Nut, Hex, Jam, .25–28, 2-13, 2-29
Nut, Hex, Jam, .31–24, 2-27, 2-29
Nut, Hex, Jam, 1.12–12, 2-11
Nut, Hex, Jam, M10 X 1.5, [Din439], 3-17
Nut, Hex, Lock, .31–18, Nl, Ss, 2-17, 2-19
Nut, Hex, Lock, M10 X 1.5, Nl, 3-9, 3-75
Nut, Hex, Lock, M10 X 1.5, Nl, Ss, 2-53, 2-55, 2-57, 3-17
Nut, Hex, Lock, M12 X 1.75, Nl, 2-29
Nut, Hex, Lock, M12 X 1.75, Nl, Ss, 2-31
Nut, Hex, Lock, M3 X 0.50, Nl, Ss, 3-41
Nut, Hex, Lock, M4 X 0.70, Nl, 3-41, 3-43
Nut, Hex, Lock, M4 X 0.70, Nl, Ss, 3-63, 4-3
Nut, Hex, Lock, M5 X 0.80, Nl, 3-5, 3-7, 3-43, 3-79, 3-81
Nut, Hex, Lock, M5 X 0.80, Nl, Ss, 2-39, 2-41, 2-61, 3-61, 3-65, 3-71
Nut, Hex, Lock, M6 X 1.00, Nl, 2-27, 2-53, 2-61, 3-41, 3-47, 3-71, 3-75
Nut, Hex, Lock, M6 X 1.00, Nl, Ss, 2-7, 2-13, 2-31, 2-39, 2-41, 2-53, 3-31, 3-35, 3-43, 3-61, 3-79, 3-81
Nut, Hex, lock, m8 X 1.25, ml, Ss, 2-47
Nut, Hex, Lock, M8 X 1.25, Nl, 2-11, 2-59, 3-13, 3-43, 3-71
Nut, Hex, Lock, M8 X 1.25, Nl, Ss, 2-7, 2-39, 2-41, 2-43, 2-47, 2-49, 3-17, 3-31, 3-35, 3-45, 3-47, 3-49, 3-57, 3-59, 3-63, 3-77, 3-81
Nut, Hex, Sltd, 1.00–20, 2-29
Nut, Hex, Std, .25–20, 2-7, 2-51, 2-61
Nut, Hex, Std, 10–32,, 2-27
Nut, Hex, Std, M10 X 1.50, Ss, 2-55
Nut, Hex, Std, M10–1.5 , Ss, 2-55
Nut, Hex, Std, M5 X 0.80, 8, 2-37
Nut, Hex, Std, M6 X 1.00, 8, 2-25
Nut, Hex, Std, M6 X 1.00, Ss, 3-31, 3-35
Nut, Hex, Std, M8 X 1.25, Ss, 2-39, 2-41, 2-57, 3-41, 3-45, 3-49
Nut, T, M10 X 1.50 X 0.62od X 0.5l, 2-57
Nut, T, M10 X 1.50 X 15.80od X 13.0l, 2-39, 2-41
Nut, U, M8 X 1.25 4–7 Thk, 2-9

P

Pad, Buff, 16.0d, Red [1 Pick = 1 Pad], 2-5
Pad, Buff, 20.0d, Red [1 Pick = 1 Pad], 2-3
Pad, Pedal, Brake, 2.79l 1.84w .75t, 2-13
Pad, Polish, 16.0d, White [1 Pick = 1 Pad], 2-5
Pad, Polish, 20.0d, White [1 Pick = 1 Pad], 2-3
Pad, Scrub, 16.0d, Blue [1 Pick = 1 Pad], 2-5
Pad, Scrub, 20.0d, Blue [1 Pick = 1 Pad], 2-3
Pad, Stop, Rbr, 2-31
Pad, Stripping, 16.0d, Black [High Prod] [1 Pick = 1 Pad], 2-5
Pad, Stripping, 16.0d, Brown [1 Pick = 1 Pad], 2-5
Pad, Stripping, 20.0D, Black [High Prod}[1 Pick = 1 Pad], 2-3
Pad, Stripping, 20.0d, Brown [1 Pick = 1 Pad], 2-3
Pad, Surf Prep, 16.0d, Maroon [1pick=1pad], 2-5
Pad, Surf Prep, 20.0D Maroon, [1Pick=1Pad], 2-3
Panel Assy, Cyl, Afmkt [T17], 2-37
Panel Kit, Pod, Afmkt [T17], 2-11
Panel Wldt, Cover, Brush, 2-7
Panel Wldt, Enclosure, Electrical, 2-61, 2-62
Panel, Access, Ce, Afmkt [T17], 2-15
Panel, Console, Lh, 2-15
Panel, Console, Rh, 2-15
Pawl, Ratchet, 3-71
Pedal Assy, Accelerator, W/O Brake, 4-4
Pedal Assy, Accelerator, W/O Brake (See Breakdowns), 2-9
Pedal Wldt, Brake, Parking, 2-13
Pedal, Foot, W/ Tread, 4-4
Pin, 0.43d 2.75l [303ss], 2-57
Pin, 0.63d, 02.0l [W/Cbore, M8 Screw], 2-57
Pin, Axle, Brg, 3-73
Pin, Clevis, 0.19d X 0.63l, 2-53
Pin, Clevis, 0.25d X 0.79l, 2-13, 2-29
Pin, Clevis, 0.31d X 2.62l, 2-53
Pin, Clevis, 0.37d X 1.00l, 2-29
Pin, Clevis, 0.37d X 1.25l, 2-13
Pin, Clevis, 0.37d X 1.75l, 2-53
Pin, Clevis, 0.37d X 2.00l, 2-31, 3-17
Pin, Clevis, 0.37d X 2.12l, 2-57
Pin, Clevis, 0.37d X 2.25l, 2-31, 3-45
Pin, Clevis, 0.37d X 3.25l, 3-31, 3-35
Pin, Clevis, 0.37d X 4.50l, 3-31, 3-35
Pin, Clevis, 0.37d X 6.12l, 3-31, 3-35
Pin, Clevis, 0.38D X 1.00L, 2-29
Pin, Clevis, 0.50d X 2.62l, 2-53
Pin, Clevis, 0.50d X 4.50l, 2-31
Pin, Clevis, 0.50d X 5.00l, 2-39, 2-41
Pin, Clevis, 0.625d X 1.75l, 3-21
Pin, Clevis, 0.62d X 2.91l, 2-53
Pin, Clevis, 0.75d X 2.00l, M10 Hole, 2-55
Pin, Clevis, 10mmd X 040mml, 3-45
Pin, Clevis, Grvd, 0.38d X 1.25l, 2-13
Pin, Cotter, .062 X 0.50, 3-45
Pin, Cotter, .062 X 0.75, 2-13, 2-29, 2-53
Pin, Cotter, .094 X 1.00, 2-13, 2-53, 3-31, 3-35
Pin, Cotter, .125 X 1.00, 2-29
Pin, Cotter, .125 X 1.25, 2-53
Pin, Cotter, .125 X 1.75, 2-29
Pin, Cotter, .156 X 1.25, 2-39, 2-41, 2-55
Pin, Cotter, Hair, 0.38d .093 Wir, 2-31, 3-17, 3-31, 3-35
Pin, Cotter, Hair, 0.75d .148 Wir, 3-21
Pin, Hair, Cotter, 0.62d .120 Wir, 3-29, 3-33, 3-49
Pin, Hitch, .375d X 3.12l, Pl, 3-75
Pin, Hitch, .750d X 7.00l, Pl, 2-7, 3-84
Pin, Pivot, Sba, 3-17
Pin, Roll, .250d X 0.75l, .250/.256, 2-39, 2-41
Pin, Roll, .250d X 1.50l, .250/.256, 2-23
Pin, Roll, .250d X 2.00l, .250/.256, 3-29, 3-33, 3-49
Pin, Roll, .250X 1.5L, .250/.256, 2-21
Pivot Arm Kit, Act, Sba, Afmkt [T17], 3-17
Pivot Arm Kit, Sba, Afmkt [T12], 3-17
Pivot Wldt, 2-35
Pivot Wldt, Caster, Sqge, 2-55
Pivot, Lift, 2-33
Plate Assy, Side, Head, Afmkt [T17], 2-31
Plate Wldt, Attachment, Frame, 2-21, 2-23
Plate Wldt, Bearing Clamp, 2-29
Plate Wldt, Brg, 2-11
Plate Wldt, Mesh, 2-43
Plate Wldt, Mtg, Hose–Reel [T17], 3-71
Plate Wldt, Mtg, Platform, 2-17
Plate Wldt, Nut, M4, 3-41
Plate Wldt, Screen, Hppr, 3-41
Plate Wldt, Shaft Pedal, 2-13
Plate Wldt, Shaft, Pedal, 2-13
Plate Wldt, Sppt, Brg, 2-11
Plate, Adapter, Brush, 3-29, 3-33, 3-49
Plate, Arm, Adj, 3-47
Plate, Arm, Prop, 2-47
Plate, Door, Battery Rollout [T17], 3-81
Plate, Doubler, 3-75
Plate, Guide, Battery Rollout [T17], 3-81
Plate, Hold–Down, 3-47
Plate, Latch [T17], 2-51, 2-59
Plate, Mtg, 2-17
Plate, Mtg, Tank, Detergent, 3-63
Plate, Plstc, Bat Rollout, 3-81
Plate, Prop Rod, [T17], 2-59
Plate, Retainer, Skirt, 3-43
Plate, Retainer, Skirt, Lh, 3-47
Plate, Retainer, Skirt, Rh, Curved, 3-45
Plate, Retainer, Skirt, Rh, Straight, 3-45
Plate, Side, Wrap, 2-37
Plate, Sppt, 3-45
Plate, Sppt (Replaced by 9014344), 3-19
Platform Set, Oprtr [T17], 2-17

Platform, Oprtr, Front, 2-9
Plug, Adapter, Port, 3-73
Plug, Circuit Breaker [Carling, 50/60a], 2-61
Plug, Drive, Brush, 2-37
Plug, Drive, Brush, Nyl, 3-45, 3-47
Plug, Holde, Rnd, 0.44H .03–.12, Blk Nyl, 2-62
Plug, Hole, Rnd, 0.25H, 1.00D 0.6L, Nyl, 3-77
Plug, Hole, Rnd, 0.63h 0.1l, Blk, 2-61
Plug, Hole, Rt, Rocker Switch, .87 X 1.7, 2-15
Plug, Hole, Soltn Tank, Blk Pyu, 2-43
Plug, Idler, Brush, 2-37
Pulley, Cable, 1.5d Nyl, 3-31, 3-35
Pump, Detgt, 36vdc (See Breakdowns), 3-63
Pump, Metering Solution, 4-5
Pump, Soltn, 36vdc, Impeller, 3-61
Pump, Soltn, Ele, 36vdc, 45psi, 3-71
Pump, Soltn, Ele, 36vdc, 60psi, 3-23, 3-65

R

Reel Assy, Hose, Large, 3-71
Relay, 36Vdc, 005A, Spdt No [Greenwich], 3-5
Replacement Kit, Bellows, 4-5
Retainer Wldt, Side Sqge, With Latch, 2-39, 2-41
Retainer Wldt, Sqge, Sba, 3-19
Retainer, Blade, Sqge, 14.2l (1 set = 2 blades), 3-73
Retainer, Brg, Iron Gray, 2-37
Retainer, Housing, Transmission, 2-21, 2-23
Retainer, Seal, Door, Vac Fan, 2-51
Retainer, Shaft, Transmission, 2-21, 2-23
Rework, Dust Cap, Valve, Drain, 3-77
Ring, Compression, 3-73
Ring, Mtg, Sqge, .38l, 2-57
Ring, Retaining, Ext, 0.59d, Basic, 2-55, 3-45, 3-47
Ring, Retaining, Ext, 0.62d, Basic, 3-45
Ring, Retaining, Ext, 0.75d, Hd, 2-11, 2-37
Ring, Retaining, Ext, 1.00d, Basic, 3-71
Ring, Retaining, Ext, 1.12d, 2-11
Ring, Retaining, Ext, 11.5mm Id, 2-21, 2-23
Ring, Retaining, Ext, 16.2mm Id, Hd, 2-21, 2-23
Ring, Retaining, Int,, 3-45
Rivet, Blind, .156D X 1.07 X .31D, Alm, 3-73
Rivet, Blind, .188d X 0.53 X .62d, Alm, 2-35
Rivet, Plstc, .250d X 0.90, 2-33
Rod Wldt, Safety, Hopper Cover, 3-41
Rod Wldt, Seat, Battery Cover [T17], 2-59
Rod–End, M10 X 1.5lh Fem M10 X 1.5stud, 2-55
Rod–End, M10 X 1.5rh Fem M10 X 1.5stud, 2-55, 3-17
Rod, Hex, M10, 09.50l, Stl, 2-55
Rod, Hex, Thd .31–24, 2–Ended, 2-29
Rod, Thrd, 2end, M8x1.25/ M10x1.5 –02, 2-57
Rod, Thrd, Full, .25–20 01.5l, 2-61

S

Screen, Pump, 3-63
Screen, Safety, Vac Fan, 2-47
Screen, Vacuum, 2-47
Screw, Flt, Soc, M5 X 0.80 X 16, 10.9, 3-81
Screw, Flt, Soc, M6 X 1.00 X 20, 10.9, 2-31
Screw, Flt, Soc, M6 X 1.00 X 25, 10.9, 2-53
Screw, Flt, Soc, M8 X 1.25 X 30, Ss, 3-81
Screw, Hex, .25–20 X 0.38, G5, 2-61
Screw, Hex, .25–20 X 0.50, G5, 3-5
Screw, Hex, .38–16 X 0.88, G5, 3-75
Screw, Hex, M10 X 1.5, 2-11
Screw, Hex, M10 X 1.50 X 20, Ss, 2-39, 2-41
Screw, Hex, M10 X 1.50 X 25, 8.8, 2-9
Screw, Hex, M10 X 1.50 X 25, Nl, Ss, 2-53
Screw, Hex, M10 X 1.50 X 25, Ss, 2-37, 3-43
Screw, Hex, M10 X 1.50 X 30, 8.8, 3-9
Screw, Hex, M10 X 1.50 X 30, Ss, 2-55, 3-43, 3-49
Screw, Hex, M10 X 1.50 X 35, 10.9, 2-21, 2-23
Screw, Hex, M10 X 1.50 X 40, 8.8, 2-21, 2-23
Screw, Hex, M10 X 1.50 X 50, 8.8, 3-84
Screw, Hex, M10 X 1.50 X 70, Ss, 2-53
Screw, Hex, M10 X 1.50 X 80, 8.8, 3-75
Screw, Hex, M10 X1.50 X 90, 8.8, 3-9
Screw, Hex, M12 X 1.75 X 180, 8.8, 2-31
Screw, Hex, M12 X 1.75 X 30, Ss, 3-17
Screw, Hex, M12 X 1.75 X 40, 10.9, 3-75
Screw, Hex, M12 X 1.75 X 40, 8.8, 2-29, 2-31, 2-33
Screw, Hex, M12 X 1.75 X 50, 8.8, 2-35
Screw, Hex, M4 X 0.70 X 50, Ss, 4-3
Screw, Hex, M5 X 0.80 X 10, Fmg, 2-35
Screw, Hex, M5 X 0.80 X 12, Ss, 2-37, 2-61, 3-23, 3-65, 3-67
Screw, Hex, M5 X 0.80 X 16, Ss, 3-79
Screw, Hex, M5 X 0.80 X 25, Ss, 3-71
Screw, Hex, M6 X 1.00 X 10, Fmg, 2-33
Screw, Hex, M6 X 1.00 X 12, Fmg, 2-35, 3-7
Screw, hex, M6 X 1.00 X 12, Ss, 3-19
Screw, Hex, M6 X 1.00 X 16, 2-37
Screw, Hex, M6 X 1.00 X 16, 8.8, 2-17, 2-25, 2-27
Screw, Hex, M6 X 1.00 X 16, Fmg, 3-45
Screw, Hex, M6 X 1.00 X 16, Nl, Ss, 3-19, 3-45, 3-47, 3-49, 3-57, 3-59
Screw, Hex, M6 X 1.00 X 16, Ss, 2-13, 2-25, 2-37, 2-39, 2-41, 2-59
Screw, Hex, M6 X 1.00 X 16, Ss, Sems, 2-11, 2-37
Screw, Hex, M6 X 1.00 X 20, 8.8, 3-71, 3-75
Screw, Hex, M6 X 1.00 X 20, 8.8, Nl, 3-13
Screw, Hex, M6 X 1.00 X 20, 9.8, Sems, 2-27, 2-61, 3-29, 3-33, 3-41, 3-65, 3-79
Screw, Hex, M6 X 1.00 X 20, Ss, 2-7, 2-51, 3-45
Screw, Hex, M6 X 1.00 X 25, 9.8, Sems, 3-41, 3-45
Screw, Hex, M6 X 1.00 X 25, Ss, 2-37, 3-41, 3-43, 3-45, 3-61
Screw, Hex, M6 X 1.00 X 30mm, Ss, 3-47
Screw, Hex, M6 X 1.00 X 35, 8.8, 2-27
Screw, Hex, M6 X 1.00 X 40, Ss, 2-62, 3-17, 3-31, 3-35, 3-79
Screw, Hex, M6 X 1.00 X 45, 8.8, 2-27
Screw, Hex, M6 X 1.00 X 55, Fl, Ss, 3-81
Screw, Hex, M6 X 1.00 X 80, Ss, 2-53, 3-43
Screw, Hex, M8 X 1.25 X 100, Ss, 3-17, 3-31, 3-35
Screw, Hex, M8 X 1.25 X 120, Ss, 3-17
Screw, Hex, M8 X 1.25 X 16, 8.8, 2-11, 2-39, 2-41
Screw, Hex, M8 X 1.25 X 16, Nl, Ss, 2-59, 3-9
Screw, Hex, M8 X 1.25 X 16, Ss, 2-51, 3-19
Screw, Hex, M8 X 1.25 X 20, 8.8, 2-9, 2-11, 3-13
Screw, Hex, M8 X 1.25 X 20, Fmg, 2-7
Screw, Hex, M8 X 1.25 X 20, Nl, Ss, 2-37, 2-43, 2-47, 3-9, 3-19, 3-63
Screw, Hex, M8 X 1.25 X 20, Ss, 2-9, 2-13, 2-59, 2-62, 3-21, 3-45, 3-79
Screw, Hex, M8 X 1.25 X 20, Ss (Large Battery), 3-81
Screw, Hex, M8 X 1.25 X 20, Ss, Sems, 2-7, 2-11, 2-15, 2-17, 2-45, 2-47, 2-49, 2-51, 2-59, 3-5, 3-11, 3-13, 3-29, 3-33, 3-41, 3-43, 3-49, 3-65, 3-71
Screw, Hex, M8 X 1.25 X 25, 9.8, Sems, 2-7, 3-31, 3-35, 3-71
Screw, Hex, M8 X 1.25 X 25, Ss, 2-7, 2-9, 2-13, 2-33, 2-43, 2-47, 2-61, 3-17, 3-21, 3-23, 3-31, 3-35, 3-41, 3-43, 3-49, 3-63, 3-65, 3-84
Screw, Hex, M8 X 1.25 X 25, Ss (Small Battery), 3-81
Screw, Hex, M8 X 1.25 X 25, Ss, Nl, 2-17, 2-47, 3-77
Screw, Hex, M8 X 1.25 X 30, 8.8, 2-59
Screw, Hex, M8 X 1.25 X 30, 9.8 Sems, 3-82
Screw, Hex, M8 X 1.25 X 30, 9.8, Sems, 3-43, 3-45, 3-81
Screw, Hex, M8 X 1.25 X 30, Ss, 2-7, 2-13, 2-47, 3-17, 3-19, 3-21, 3-61, 3-63
Screw, Hex, M8 X 1.25 X 35, 9.8, Sems, 2-9, 2-17, 3-81
Screw, Hex, M8 X 1.25 X 35, Fl, Ss, 2-7, 3-31, 3-35, 3-45
Screw, Hex, M8 X 1.25 X 35, Nl, Ss, 2-13, 2-47, 3-17
Screw, Hex, M8 X 1.25 X 40, Nl, Ss, 2-13
Screw, Hex, M8 X 1.25 X 45, Ss, 2-11, 3-19

Screw, Hex, M8 X 1.25 X 50, Fl, Ss, 3-41
Screw, Hex, M8 X 1.25 X 50, Ss, 3-31, 3-35
Screw, Hex, M8 X 1.25 X 60, Ss, 2-13
Screw, Hex, M8 X 1.25 X 70, Ss, 3-45
Screw, Hex, M8 X 1.25 X 80, Fl, Ss, 3-49
Screw, Hex, M8 X 1.25 X 90, 8.8, 2-29
Screw, Pan, M04 X 0.7 X 35, Ss, 2-3
Screw, Pan, M06 X 1.0 X 35, Ss, 2-3
Screw, Pan, M06 X 1.0 X 35, Ss, 2-5
Screw, Pan, Phl, .31-18 X 1.00, G2, 2-17
Screw, Pan, Phl, .31-18X1.00, G2, 2-19
Screw, Pan, Phl, 06 X 0.50, Fmg/Ab, Blk, 2-15, 3-3
Screw, Pan, Phl, 06-20 X 0.50, Fmg/Ab, 3-5, 3-41
Screw, Pan, Phl, 08-16 X 1.13, F/ Plstc, 3-9
Screw, Pan, Phl, 10-32 X 0.50, G2, Blk, 2-59
Screw, Pan, Phl, 12-16 X 0.50, F/ Plstc, 2-47, 2-51
Screw, Pan, Phl, M3 X 0.50 X 10, 4.8, 3-3, 3-41
Screw, Pan, Phl, M3 X 0.50 X 6, 4.8, 2-61, 3-51
Screw, Pan, Phl, M4 X 0.70 X 10, 4.8, 2-61, 3-25, 3-37, 3-51
Screw, Pan, Phl, M4 X 0.70 X 10, Ss, 2-37, 3-41
Screw, Pan, Phl, M4 X 0.70 X 16, 4.8, 2-27, 3-13, 3-41, 3-43, 3-79
Screw, Pan, Phl, M4 X 0.70 X 16, Ss, 2-25, 3-11, 3-63
Screw, Pan, Phl, M4 X 0.70 X 35, Ss, 2-3, 2-5
Screw, Pan, Phl, M5 X 0.80 X 12, Ss, 3-65
Screw, Pan, Phl, M5 X 0.80 X 16, 4.8, 3-5, 3-7
Screw, Pan, Phl, M5 X 0.80 X 16, Blk, 2-39, 2-41, 2-43
Screw, Pan, Phl, M5 X 0.80 X 16, Tcut,Ss, 4-3
Screw, Pan, Phl, M5 X 0.80 X 20, 4.8, 2-59
Screw, Pan, Phl, M5 X 0.80 X 20, Ss, 3-61
Screw, Pan, Phl, M5 X 0.80 X 25, 4.8, 3-43
Screw, Pan, Phl, M6 X 1.00 X 12, Blk, 2-15, 2-57
Screw, Pan, Phl, M8 X 1.25 X 16, Blk, 2-43
Screw, Set, M6 X 1.00 X 8, Nl, 2-11
Screw, Set, M8 X 1.25 X 8, Lock, 2-11
Screw, Set, Soc, 08-32 X 0.25, Nl, 2-37, 3-45
Screw, Soc, M10 X 1.5 X 20, 12.9, 2-21, 2-23
Screw, Soc, M10 X 1.50 X 35, 12.9, 2-21, 2-23
Screw, Soc, M12 X 1.75 X 40, 12.9, 2-21, 2-23
Screw, Soc, M6 X 1.00 X 14, Nl, 2-21, 2-23
Screw, Soc, M8 X 1.25 X 25, 12.9, 3-17
Seal, Afmkt, Bulb, Dual, 01ft [F/.30gap], 2-59
Seal, Afmkt, Bulb, Dual, 03ft [F/.30gap], 2-43, 2-51
Seal, Afmkt, Bulb, Dual, 12Ft [F/.30Gap], 2-47
Seal, Axial, Transmission [199 Vs R], 2-21, 2-23
Seal, Door, Vac Fan, Rbr, 2-51
Seal, Rbr, Clsd, 0.375, 5.0d 2.5h, 3-43
Seat Kit, Deluxe, Ci [T17], 2-19
Seat, Dlx, W/ Armrests & Seatbelt, 2-19
Seat, Std [Milsco], 2-17
Sensor, Level, Liq, 14vdc 01a .62-11, 2-47, 3-59, 3-61
Sensor, Position [Hall], 4-4
Sensor, Press, 3 Psi, 8-30vdc, 2-43
Service Kit [T17], 1-1
Shaft, 2-29
Shaft Wldt, Brake, 2-29
Shaft Wldt, Pivot, Front, 2-13
Shaft, Drive, Brush, 2-37
Shaft, Drive, Pre-Sweep, Lrg Brg, 3-45
Shaft, Idler, Brush, Main, 3-47
Shaft, Input, Transmission, 2-21, 2-23
Shaft, Steering, Mnl, 2-11
Shaft, Steering, Power, Lower, 3-11, 3-13
Shaft, Steering, Power, Upper, 3-11, 3-13
Sheave, 07grv, 03.3pd 0.63b [Pj], 3-45
Sheave, 07grv, 1.22pd 0.55b [Pj], 3-45
Sheave, 09grv, 1.18pd 0.55b [Pj], 2-37
Sheave, 09grv, 4.13pd 0.75b [Pj], 2-37
Shield, Bumper, Sqge Cplg, 2-53
Shield, Plug, Drive, 3-47
Shim, Transmission, 2-23
Shoe Set, Brake [1pick=1pkg], 2-29
Shroud, Front, Afmkt [T17], 2-9
Shunt, 050mv 400a, 3-79
Skirt Kit, Disk, Afmkt [T17], 2-33
Skirt Kit, Hopper, Preswp, Afmkt [T17], 3-43
Skirt, Neo, .06, 03.62w 28.12l 05/Sl, 3-43
Skirt, Neo, .06, 04.88w 28.26l 05/Sl, 3-43
Skirt, Neo, .19, 03.62w 28.12l 05/Sl, 3-43
Skirt, Rbr, .12, 09.11w 16.61l, 05/Hole, 3-45, 3-47
Skirt, Rbr, Front, 2-33
Skirt, Rbr, Rear, 2-33
Sleeve, Nyl, 1.63id 20.0l, 2-27
Sleeve, Nyl, 1.63id 35.0l, 2-25
Sleeve, P/m 0.32B 0.50D 0.3L [430Ss], 2-7
Sleeve, P/M, 0.25b 0.38d 0.2l [430ss], 2-39, 2-41
Sleeve, P/M, 0.25b 0.38d 0.8l, 3-17
Sleeve, P/M, 0.32b 0.50d 0.3l [430ss], 3-31, 3-35
Sleeve, P/M, 0.32b 0.50d 0.4l [430ss], 3-17
Sleeve, P/M, 0.32b 0.50d 0.5l [430ss], 3-31, 3-35
Sleeve, P/M, 0.32b 0.50d 0.9l [430ss], 2-13
Sleeve, P/M, 0.32b 0.50d 1.3l [430ss], 2-13
Sleeve, P/M, 0.32b 0.50d 3.03l, 3-17
Sleeve, P/M, 0.34b 0.63d 0.4l, Ss / Oil, 2-47
Sleeve, P/M, 0.34b 0.63d 0.6l, Bnz, 3-19
Sleeve, P/M, 0.34b 0.63d 1.2l, Bnz, 3-19
Sleeve, P/M, 0.50b 0.87d 0.6l [430ss], 2-31
Sleeve, P/M, 0.75B 0.88D 0.6L [841Brz], 2-11
Sleeve, P/M, 1.13B 1.38D 1.0L, 2-11
Sleeve, P/M, Flng, 0.33b 0.75/0.50d 0.8l, 2-47
Sleeve, P/M, Flng, 0.50b 1.25/0.75d 0.4l, 2-31
Sleeve, Vyl, Flex, .23Id, 3-5
Spacer, Arm, Brush, 3-47
Spacer, Blade, 3-19
Spacer, Brg, 2-37, 3-45
Spacer, Brg, Transmission, 2-21
Spacer, Rnd, .38b .88d .38l, 2-17, 2-19
Spring, 2-29
Spring Assy, Replmt, Afmkt [T12], 3-17
Spring, Cmpr, 0.37id X Flat Wir, 1.0l, 3-31, 3-35
Spring, Cmpr, 0.98od .14wir 02.00l, Ss, 2-57
Spring, Cmpr, 1.25od Flat Wir 02.5l, 2-31
Spring, Compr, .98od 2.5l, 3-31, 3-35
Spring, Extn, 0.35od 0.05wir 02.8l, 4-4
Spring, Extn, 0.62od 0.08wir 03.0l, 3-31, 3-35
Spring, Extn, 0.75od 0.10wir 03.0l, 2-39, 2-41
Spring, Extn, 1.68od 0.20wir 07.5l, 2-55, 3-17
Spring, Tens, .75Od X .08S 7.0L, 2-13
Spring, Tors, .54d .09wir, 2-13
Spring, Torsion, Hose Reel, 3-71
Spring, Wir, 0.16d, Brush Retaining, 2-3, 2-5
Sprocket Kit, 0.75B, Afmkt [T12], 2-11
Sprocket Kit, 0.75B, Afmkt [T17/M17], 2-11
Sprocket Kit, 1.12B, Afmkt [T12], 2-11
Sprocket Kit, 1.12B, Afmkt [T17/M17], 2-11
Sprocket Wldt, Output, Transmission, 2-21, 2-23
Sprocket, Dbl, 2-21, 2-23
Sprocket, Steering, 0.75B, 2-11
Sprocket, Steering, 1.12B, 2-11
Squeegee Assy, Sba, Afmkt [T17], 3-19
Squeegee Frame Assy, 2-57
Squeegee Kit, Ci [T17], 2-57
Squeegee Kit, Rear_Side, Linatex [T17], 1-1
Squeegee Kit, Rear_Side, Urethane [T17], 1-1
Squeegee, Hand, 3-73
Stand-Off, Circuitboard [0.25"], 2-61, 3-25, 3-37, 3-51
Stand-Off, Wir, 0.25, Insulator, Panel, 2-61
Strainer, Soltn, 20mesh, Cyl, 3.5d 09.5l, 3-61
Strap Wldt, 2-57
Strap, Static, W/Grommet, .19 1.1w 25.0l, 2-7
Support, Valve, Drain, 3-77
Switch, Ignition [Merit Gmbh], 2-15
Switch, Limit, N.C. [Cpi, Spst, 280 Mp], 3-81
Switch, Press, 25psi, Pm02, 3-65
Switch, Rocker [Mom,Off,Mom, Dual Led], 3-51
Switch, Rocker [Mom,Off,Mom, Dual Led] (Only on Severe Environment Group), 3-63
Switch, Rocker, Dpdt, On / None / On, 2-15, 3-71

Switch, Rocker, Dpst, On / None / On, 3-25, 3-37
Switch, Rocker, Prgrsv, 3-3, 3-5, 3-7, 3-51
Switch, Rocker, Spst, Mom, 4-3
Switch, Safety, Shutoff, 2-15
Switch, Seat, No [Delta 6440–04], 2-17
Switch, Snap, 15a Nc, 2-13
Switch, snap, 25a Spdt, 3-13

T

Tank Kit, Detergent, CE Afmkt [T17], 3-63
Tank, Rec, Afmkt [T17], 2-47
Tank, Soltn, Afmkt [T17], 2-43
Tank, Water, 30.0L, Battery Fill sys, 3-82
Tensioner Kit, Str Trans, Afmkt [T17/M17], 2-21, 2-23
Tensioner, Chain, Dbl, 2-21, 2-23
Tie, Cable, 11.3l, 2.75d Max, 2-25, 2-27, 2-61, 3-25, 3-79
Tie, Cable, Nyl, 07.3l .19w 1.8 Max D, 3-5
Tie, Cable, Nyl, 11.0l, .14w, 3.0 Max. D, 2-27, 2-51, 3-7, 3-23, 3-63, 3-71, 4-3
Tie, Cable, Nyl, 11.4l .19w 3.0 Max D, 3-5
Tie, Cable, Nyl, 29.8l .30w 9.0 Max D, 3-25
Tie, Cable, Nyl, Push Mount, 76Mm Max D, 2-45
Tire Assy, Front, Opt, White [T17] (Optional), 2-21
Tire Assy, Front, Std, Gray [M17], 2-23
Tire Assy, Rear, High Traction (1) [T17] (Option), 2-29
Tire Assy, Rear, Std (1) [T17], 2-29
Tire, Assy, Front, Std, Red [T17], 2-21
Tire, Solid, 15.0 X 5.0 [Hi–Traction], 2-29
Tire, Solid, 15.0 X 5.0, Poly, Std, 2-29
Tool, Installation, Belt, 1-1, 2-37
Track, Slide, Seat Adj, 12.5l, 2-17, 2-19
Track, Slide, Seat Adj, 12.5l, W/Latch, 2-17, 2-19
Transmission Assy, Str, Afmkt [T17], 2-21
Transmission Assy, Str, Afmkt [T17/M17], 2-23
Tray Kit, Debris, Cyl, Afmkt [T17], 2-35
Tray Wldt, Ro Battery, [T17], 3-81
Tray, Debris, Tank, 2-47
Tray, Vac Wand, 3-73
Tread, Non–Skid–Step, 3.75W 8.5L, Sba, 2-7
Tread, Non–Skid–Step, 5.5w 13.8l, 2-7
Tread, Non–Skid–Step, 6.3w 12.8l, Sba, 3-21
Tube Assy, 34.2l, 2-43
Tube Wldt, Arm, Brush, Side, 3-49
Tube Wldt, Front, 3-9
Tube Wldt, Guard, Lh, Front, 3-9
Tube Wldt, Ohg, Lh, 3-9
Tube Wldt, Ohg, Rh, 3-9
Tube, 0.38id 0.50od 02.2l, Stl, Pl, 3-43
Tube, 0.74id 1.24od 0.47l, Pyu, 2-21, 2-23
Tube, Column, Steering, 2-11
Tube, Guard, 3-75
Tube, Ohg, Middle, Rear, 3-9

V

Vac Fan Kit, W/Seal [T17], 3-43
Vac Wand Kit, Ci [T17], 3-73
Valve Kit, Check, Es [T17], 3-61
Valve Kit, Pump, 4-5
Valve, Ball, Drain, 2.00id, Rh, 3-77
Valve, Check, 0005psi Bm06/Bm06, 3-65
Valve, Check, Pump, Water, 3-61
Valve, Water, Solenoid – 36v, 2-33, 2-35
Valve, Water, Solenoid, 36vdc 6.0mm Pf04, 3-67
Valve, Water, Solenoid, 36vdc Bm12/Bm12, 3-23
Valve, Water, Solenoid, 36vdc Pf08/Pf08, 3-57, 3-59

W

Washer Flat,0.50,Sae, 2-29
Washer, 1.02 Od, .62 Id, Urethane, 2-55
Washer, Flat, 0.16b 0.38d .05, Pl, 06, 3-43
Washer, Flat, 0.17b 0.31d .03, Nyl, 2-61, 3-25, 3-37, 3-51
Washer, Flat, 0.19b 0.44d .05, Pl, 08, 2-27, 3-41
Washer, Flat, 0.25, Fendr, 3-43
Washer, Flat, 0.25, Sae, 2-17, 2-21, 2-23, 2-25, 2-27, 2-61, 3-5, 3-13, 3-75, 3-79
Washer, Flat, 0.25, Sae, Blk, 2-15
Washer, Flat, 0.25, Std, 2-59, 3-7, 3-23, 3-63, 3-65
Washer, Flat, 0.25b 0.56d .05, Pl, 10, 3-5, 3-7
Washer, Flat, 0.25b 1.12d .12, Ss, 2-27
Washer, flat, 0.27B 0.69D .05, Ss, 2-7, 2-25, 2-33, 2-37, 2-39, 2-41, 2-53, 2-57, 3-17, 3-19, 3-31, 3-35, 3-41, 3-43, 3-45, 3-49, 3-57, 3-59, 3-79, 3-81
Washer, Flat, 0.28b 1.00d .06, Stl, 2-51
Washer, Flat, 0.28b 1.00d .06, Stl, Blk, 3-45, 3-47, 3-73
Washer, Flat, 0.31, Sae, 2-9, 2-25, 2-27, 2-29, 3-9, 3-13, 3-81
Washer, Flat, 0.31, Std, 2-9, 2-11, 2-29, 2-59, 3-13, 3-43, 3-45
Washer, Flat, 0.32 1.00D .12, Ss, 2-62
Washer, flat, 0.32B 1.00D .12, Ss, 2-7, 2-9, 2-17, 2-37, 2-43, 2-47, 2-59, 3-9, 3-17, 3-19, 3-21, 3-31, 3-35, 3-41, 3-47, 3-49, 3-63, 3-84
Washer, Flat, 0.33b 1.38d .08, Ss, 3-17
Washer, Flat, 0.34b 1.25d .11, Ss, 2-13
Washer, Flat, 0.34b 1.50d .12, Stl, Pl, 2-47, 3-31, 3-35
Washer, Flat, 0.38, Sae, 2-9, 2-11, 2-13
Washer, Flat, 0.38, Std, 2-9, 2-21, 2-23, 2-51, 3-75, 3-84
Washer, Flat, 0.38b 0.88d .08, Ss, 2-7, 2-13, 2-17, 2-19, 2-33, 2-47, 2-49, 3-9, 3-19, 3-31, 3-35, 3-43, 3-49, 3-57, 3-59, 3-61, 3-77, 3-81
Washer, Flat, 0.40b 1.12d .12, Ss, 2-53
Washer, Flat, 0.44b 1.00d .08, Ss, 2-33, 2-37, 2-39, 2-41, 2-53, 2-55, 2-57, 3-9, 3-17, 3-19, 3-41, 3-43, 3-45, 3-49
Washer, Flat, 0.48b 2.50d .12, Ss, 3-17
Washer, Flat, 0.50b 0.75d .02, Stl, 2-23
Washer, Flat, 0.50b 1.25d 0.8, Stl, Pl, 2-31, 2-35
Washer, Flat, 0.51b 1.25d .06, Ss, 3-75
Washer, Flat, 0.53b 1.50d .19, Stl, 2-31
Washer, Flat, 0.5b 1.5d .12, Stl, Pl, 2-33
Washer, Flat, 0.60b 1.31d .10, Ss, 2-55
Washer, Flat, 0.62, Sae, 2-55
Washer, Flat, 0.66b 1.00d .12, Rbr, 3-57, 3-59
Washer, Flat, 0.66b 2.50d .19, Ss, 3-29, 3-33, 3-49
Washer, Flat, 08, Ss, 2-5, 4-3
Washer, Flat, 1.00, Sae, 2-29
Washer, Flat, 1.02b 1.75d .12, Stl, 3-71
Washer, Flat, 10, Sae, 2-27
Washer, Flat, 10, Ss, 2-25, 2-61, 3-11, 3-61, 3-63, 3-65, 3-67, 3-71, 3-79
Washer, Flat, Belleville, .25, 2-37, 3-45, 3-47
Washer, Flat, Belleville, .31, 2-33, 2-37, 3-19, 3-45
Washer, Flat, M12, 2-21
Washer, Flat, M12, Ss, 2-23
Washer, Flt, .25 Ss, 2-3, 2-5
Washer, Flt, #08 Ss, 2-3
Washer, Large, Transmission, 2-21
Washer, Lock, Int–Ext, 0.31, 2-7, 2-15
Washer, Lock, Int–Ext, 0.50, 2-35
Washer, Lock, Int, 0.25, Ss, 2-25, 2-27, 2-61
Washer, Lock, Int, 0.31, 2-25, 2-27
Washer, Lock, Int, 10, 2-27
Washer, Lock, Int, 10, Ss, 2-61, 3-79
Washer, Retainer, Spring, 3-71
Washer, Sealing, 0.28b 0.75d Ss, Neo, 3-61
Washer, Thrust, 0.61b 1.25d .06, Fgl, 2-39, 2-41
Washer, Thrust, 0.66b 1.25d 0.06w, 2-55
Washer, Thrust, 0.79b 1.42d 0.06[Garlok], 2-11, 2-39, 2-41
Washer, Thrust, 50.0b 110.0d 0.79w, 3-71
Washer, Thrust, Plstc 1.02b 1.38d, 3-71
Washer, Wavy, 1.20b 1.54d .13, 2-55
Weight, Counter, Casting, 250Lb, Painted, 3-84
Wheel Assy, Drive, Ac, W/O Brake, 2-21
Wheel Assy, Drive, Ac, W/O Brake, White (Optional), 2-21
Wheel Bearing Kit, Rear, Afmkt [T17], 2-29
Wheel, 01.6d 0.72w 0.21b, 3-31, 3-35
Wheel, 04.0d 0.89w 0.64b, 2-57, 3-19, 3-21
Wheel, 05.0d 2.00w 0.75b, Gray, W/ Bshg, 2-7, 3-84
Wheel, Drive, Ac, W/O Brake, Gray [Hd], 2-23
Wheel, Steering, 14.4d, 2-11
Wire, Tie [W/.25” Fir Tree Clip], 2-35, 3-17, 3-25, 3-41, 3-51, 3-63
Wire, Tie [W/.25” Fir Tree Clip], 2-47, 3-79