R3

Carpet Cleaner

(S/N 30000000- 40000000)

Parts Manual

Models
9004192 - 120V
9004199 - 230V
9013418 - 100V (Japan)

READY SPACE®

More than clean, it's ReadySpace. ™

For the latest Parts manuals and other language Operator manuals, visit:

www.tennantco.com/manuals

North America / International / Japan

9012802
Rev. 02 (06-2017)

www.tennantco.com

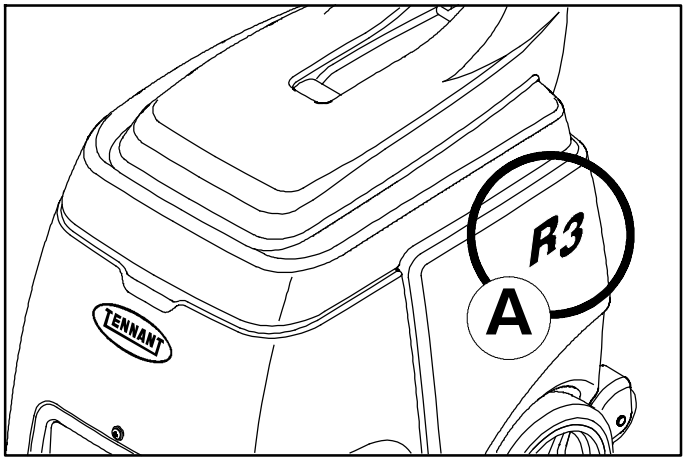

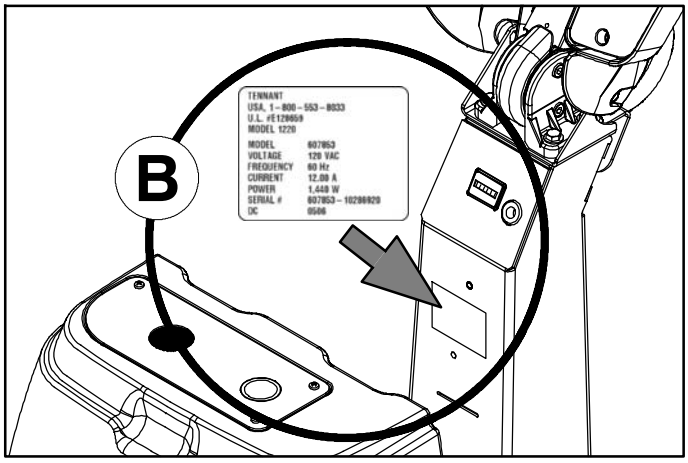

Ref	Part No.	Serial Number	Description	Qty.
1	82681	(000000-)	Bracket Wldt, Lpg Mount	1
▽ 2	63810	(000000-)	Latch Assy, Lpg Tank Mtg, W/Nut	4
▲ 3	51839	(000000-)	Nut Adjustable, Lpg Tank Mtg	2
4	49263	(000000-)	Tie, Cable	3
5	82556	(000000- 001039)	Bracket, Vaporizer	1
6	54930	(000000-)	Vaporizer, LPG	1

D

C

HOW TO ORDER PARTS - See diagram above

Only use TENNANT Company supplied or equivalent parts. Parts and supplies may be ordered online, by phone, by fax or by mail.

Follow the steps below to ensure prompt delivery.

1. **(A)** Identify the machine model.
2. **(B)** Identify the machine serial number from the data label.
3. **(C)** Ensure the proper serial number is used from the parts list.
4. Identify the part number and quantity. Do not order by page or reference numbers.
5. Provide your name, company name, customer ID number, billing and shipping address, phone number and purchase order number.
6. Provide detail shipping instructions.

(D) ▽ - identifies an assembly
▲ - identifies parts included in assembly

Please fill out at time of installation for future reference.

Model No. - _____

Serial No. - _____

Machine Options - _____

Sales Rep. - _____

Sales Rep. phone no. - _____

Customer ID Number - _____

Installation Date - _____

Tennant Company
PO Box 1452
Minneapolis, MN 55440 USA
Phone: (800) 553-8033
www.tennantco.com

TENNANT Cleaning Systems & Equipment Co., Ltd
Building 1, No. 3777 Caoying Road
Qingpu Shanghai, China 201712
Tel: 86 21 6922 53333
Fax: 86 21 69225151
www.tennant.co.cn

TENNANT Company Japan
Sanka Bldg. 5F
2-9 Minami Saiwai-cho
Saiwai-Ku
Kawasaki, Kanagawa 212-0016
Tel: 044-556-1201
Fax: 044-556-1202
www.tennant.co.jp

Specifications and parts are subject to change without notice.

Copyright © 2017 TENNANT Company, Printed in China.

BG

КАК ДА ПОРЪЧВАМЕ ЧАСТИ - Вижте схемата по-горе

Използвайте само части, доставени от TENNANT или техни еквиваленти. Частите и доставките могат да се поръчат онлайн, по телефон, факс или по пощата.

Следвайте долупосочените стъпки, за да си осигурите бърза и точна доставка.

1. **(A)** Посочете модела на машината.
2. **(B)** Посочете серийния номер на машината от табелката с техническите данни.
3. **(C)** Уверете се, че сте използвали точния сериен номер от списъка с части.
4. Посочва номера на частта и количеството. Не поръчвайте части според страницата или референтните номера.
5. Посочете своето име, наименованието на фирмата, клиентския номер, адреса за получаване на сметката и доставката, тел.номер и номера на поръчката.
6. Посочете подробни инструкции за доставката.

(D) ▽ - посочва начин на монтаж
▲ - посочва частите, включени в монтажа

Моля, попълнете по време на монтажа за бъдеща справка.

Модел Э - _____
Сериен Э - _____
Опции на машината - _____
Търговски представител - _____
Тел. Э на търг. представител - _____
Клиентски Э - _____
Дата на монтаж - _____

CN

如何订购部件 – 参见下表

仅使用 TENNANT 公司提供的或同等部件。部件和供应可以在线订购，通过电话、传真或邮件订购。
请遵循下面的步骤确保及时交付。

1. (A) 确定机器型号。
2. (B) 从数据标签确定机器序列号。
3. (C) 确保使用部件列表中的正确序列号。
4. 确定部件号和数量。
   不要按页面或参考编号订购。
5. 提供您的姓名、公司名称、客户 ID 号、付帐和送货地址、电话号码和采购单编号。
6. 提供详细的送货说明。

(D) ▽ – 确定组件
▲ – 确定组件中包含的组件

请在安装时填写供未来参考。

型号 – _____
序列号 – _____
机器选项 – _____
销售代表– _____
销售代表电话号码 – _____
客户 ID 编号 – _____
安装日期 – _____

CZ

OBJEDNÁVÁNÍ DÍLŮ - Viz schéma výše.

Pou ívejte pouze díly dodané společností TENNANT Company nebo jim odpovídající. Díly a materiál lze objednat online, telefonem, faxem nebo poštou.

Aby bylo zajištěno rychlé dodání, postupujte podle kroků uvedených ní e.

1. **(A)** Zjistěte model stroje.
2. **(B)** Zjistěte sériové číslo stroje z výrobního štítku.
3. **(C)** Pou ijte správné sériové číslo ze seznamu dílů.
4. Určete číslo a mno ství dílů.
   Neobjednávejte podle stran nebo referenčních čísel.
5. Uveďte jméno, název společnosti, číslo ID zákazníka, fakturační a dodací adresu, telefonní číslo a číslo objednávky.
6. Uveďte podrobné pokyny pro dodání.

(D) ▽ - označuje sestavu
▲ - označuje díly v sestavě

Vyplňte během sestavování pro budoucí potřebu.

Číslo modelu - _____
Sériové číslo - _____
Doplňky zařízení - _____
Obchodní zástupce - _____
Tel. č. obchodního zástupce - _____
Číslo ID zákazníka - _____
Datum instalace - _____

DE

BESTELLEN VON ERSATZTEILEN - Siehe oben stehendes Diagramm.

Verwenden Sie nur von TENNANT gelieferte oder gleichwertige Ersatzteile. Ersatz- und Verschleißteile können online, telefonisch, per Fax oder per E-Mail bestellt werden.

Befolgen Sie für eine umgehende Lieferung die folgenden Schritte.

1. **(A)** Geben Sie das Modell der Maschine an.
2. **(B)** Geben Sie die Seriennummer der Maschine an (auf dem Datenaufkleber).
3. **(C)** Achten Sie darauf, dass die richtigen Seriennummer aus der Ersatzteilliste verwendet wird.
4. Geben Sie die Ersatzteilnummer und die Menge an.
   Bestellen Sie nicht nach Seitenzahl oder Referenznummern.
5. Geben Sie Ihren Namen, den Firmennamen, die Kundennummer, die Rechnungs- und Lieferadresse, die Telefonnummer und die Einkaufsauftragsnummer an.
6. Erteilen Sie genaue Versandanweisungen.

(D) ▽ - steht für eine Einheit
▲ - steht für Einzelteile einer Einheit

Bitte bei der Inbetriebnahme als Referenzangabe ausfüllen.

Modellnr. - _____
Seriennr. - _____
Maschinenoptionen - _____
Verkäufer - _____
Telefonnummer des Verkäufers - _____
Kundennummer - _____
Installationsdatum - _____

DK

BESTILLING AF RESERVEDELE - Se ovenstående tabel.

Brug kun reservedele, der er fremstillet af TENNANT, eller dele af tilsvarende kvalitet. Reservedele og tilbehør kan bestilles online, pr. telefon, pr. fax eller pr. brev.

Følg nedenstående trin for at sikre hurtig levering.

1. **(A)** Identificér maskinmodellen.
2. **(B)** Identificér maskinens serienummer på datamærkaten.
3. **(C)** Kontrollér, at det rigtige serienummer bruges i reservedelslisten.
4. Identificér reservedelsnummeret og antallet. Bestil ikke efter side- eller referencenumre.
5. Angiv dit navn, firmanavn, kunde- id- nummer, faktureringsadresse og leveringsadresse, telefonnummer og indkøbsordrenummer.
6. Angiv detaljerede instruktioner til forsendelse.

(D) ▽ - identificerer en enhed
▲ - identificerer reservedele i en enhed

Udfyld venligst på installationstidspunktet til fremtidig brug.

Modelnr. - _____
Serienr. - _____
Maskinekstraudstyr - _____
Salgskonsulent. - _____
Salgskonsulentens tlf. - _____
Kunde- id- nr. - _____
Installationsdato - _____

EE

KUIDAS VARUOSI TELLIDA – vaadake alltoodud joonist

Kasutage ainult TENNANT Company poolt tarnitud või samaväärseid varuosi. Varuosi ja tarvikuid saab tellida Interneti, telefoni, faksi või posti teel.

Kiire kohaletoimetamise tagamiseks järgige alltoodud juhiseid.

1. **(A)** Märkige masina mudel.
2. **(B)** Märkige andmesildil olev masina seerianumber.
3. **(C)** Veenduge, et olete valinud varuosade loendist õige seerianumbri.
4. Märkige varuosa number ja kogus. Ärge tellige lehekülje- või viitenumbri alusel.
5. Märkige oma nimi, ettevõtte nimi, kliendinumber, arveldus- ja saatmisaadress, telefoninumber ja ostutellimuse number.
6. Lisage täpsed saatmisjuhised.

(D) ▽ - tähistab komplekti
▲ - tähistab komplektis olevaid osii

Palun täitke paigaldamise ajal edaspidiseks viitamiseks.

Mudeli number - _____
Seerianumber - _____
Masina lisavarustus - _____
Müügiesindus - _____
Müügiesinduse telefoninumber - _____
Kliendinumber - _____
Paigaldamise kuupäev - _____

ES

CÓMO SOLICITAR PIEZAS - Consulte el diagrama anterior.

Utilice sólo las piezas suministradas por TENNANT Company o piezas equivalentes. Puede solicitar las piezas a través de internet, por teléfono, por fax o por correo.

Siga los siguientes pasos para que la entrega sea rápida.

1. **(A)** Indique el modelo de máquina.
2. **(B)** Indique el número de serie de la etiqueta de datos.
3. **(C)** Asegúrese de que indica el número de serie correcto de la lista de piezas.
4. Indique la cantidad y el número de la pieza. No realice el pedidoindicando el número de página o el de referencia.
5. Incluya su nombre, el nombre de la empresa, el ID de cliente, las direcciones de envío y facturación, el número de teléfono y el número del pedido de compra.
6. Facilite instrucciones de envío.

(D) ▽ - identifica un conjunto
▲ - identifica piezas de un conjunto

Rellene estos datos cuando realice la instalación para utilizarlos como referencia en el futuro.

Nº modelo - _____
Nº serie - _____
Opciones de la máquina - _____
Vendedor - _____
Nº teléfono vendedor - _____
Nº cliente - _____
Fecha de instalación - _____

FI

KUINKA VARAOSIA TILATAAN - katso kuvaa yllä.

Käytä ainoastaan TENNANTIN toimittamia tai niitä vastaavia varaosia. Voit tilata varaosia ja tarvikkeita internetistä, puhelimitse, faksilla tai sähköpostilla.

Noudata seuraavia ohjeita täsmällisen toimituksen varmistamiseksi.

1. **(A)** Katso koneen malli.
2. **(B)** IKatso koneen sarjanumero sen tunnustarrasta.
3. **(C)** Varmista, että osaluettelosta, että käytät oikeaa sarjanumeroa.
4. Katso osanumero ja kappalemäärä. Älä tilaa ilmoittamalla sivu- tai viitenumeroita.
5. Ilmoita nimesi, yrityksesi nimi, asiakasnumero, laskutus- ja toimitusosoite, puhelinnumero ja ostotilauksen numero.
6. Ilmoita yksityiskohtaiset toimitusosoitteet.

(D) ▽ - tarkoittaa kokoonpanoa
▲ - tarkoittaa kokoonpanoon sisältyviä osia

Ole hyvä ja täytä ottaessasi koneen käyttöön myöhempiä tarpeita varten.

Mallinumero - _____
Sarjanumero - _____
Koneen lisävarusteet - _____
Myyntiedustaja - _____
Myyntiedustajan puhelinnumero - _____
Asiakasnumero - _____
Asennuspäivä - _____

FR

COMMENT COMMANDER DES PIÈCES DÉTACHÉES - Voir le schéma ci- dessus.

Utilisez uniquement des pièces fournies par la société TENNANT ou équivalentes. Les pièces et fournitures peuvent être commandées en ligne, par téléphone, fax, ou par courrier.

Suivez les étapes ci- dessous pour assurer une livraison rapide.

1. **(A)** Identifiez le modèle de la machine.
2. **(B)** Identifiez le numéro de série de la machine, à partir de l'étiquette signalétique.
3. **(C)** Assurez- vous que le numéro de série correct est utilisé à partir de la liste de pièces détachées.
4. Identifiez le numéro de pièce et la quantité. Ne commandez pas par page ou numéros de référence.
5. Fournissez votre nom, le nom de votre société, votre numéro d'identification de client, l'adresse de facturation et d'expédition, le numéro de téléphone et le numéro du bon de commande.
6. Fournissez des instructions d'expédition détaillées.

(D) ▽ - identifie un assemblage
▲ - identifie les pièces composant l'assemblage

A remplir au moment de l'installation à titre de référence.

Nº du modèle - _____
Nº de série - _____
Options de la machine - _____
Agent commercial - _____
Nº tél. de l'agent commercial - _____
Numéro d'identification client - _____
Date d'installation - _____

GR

ΤΡΟΠΟΣ ΠΑΡΑΓΓΕΛΙΑΣ ΑΝΤΑΛΛΑΚΤΙΚΩΝ - Βλ. παραπάνω διάγραμμα.

Χρησιμοποιήστε μόνο ανταλλακτικά παρεχόμενα από την TENNANT Company ή ισοδύναμα. Τα ανταλλακτικά και αναλώσιμα μπορούν να παραγγελθούν online, τηλεφωνικά, με φαξ ή ταχυδρομικά.

Ακολουθήστε τα παρακάτω βήματα για να εξασφαλίσετε την έγκαιρη αποστολή τους.

1. **(A)** Βρείτε το μοντέλο μηχανήματος.
2. **(B)** Βρείτε τον αριθμό σειράς του μηχανήματος από την ετικέτα στοιχείων.
3. **(C)** Βεβαιωθείτε ότι χρησιμοποιείται ο σωστός αριθμός σειράς από τον κατάλογο ανταλλακτικών.
4. Βρείτε κωδικό ανταλλακτικού και ποσότητα. Μην παραγγέλνετε βάσει σελίδας ή αριθμών αναφοράς.
5. Δώστε το όνομα σας, όνομα εταιρείας, ID (κωδικό) πελάτη, διεύθυνση τιμολόγησης και αποστολής, αριθμό τηλεφώνου και αριθμό εντολής προμήθειας.
6. Δώστε λεπτομερείς πληροφορίες αποστολής.

(D) ▽ - υποδηλώνει υποσύστημα
▲ - υποδηλώνει τα μέρη που περιλαμβάνονται στο υποσύστημα

Παρακαλούμε συμπληρώστε κατά την ώρα της εγκατάστασης για μελλοντική αναφορά.

Αρ. Μοντέλου - _____
Αρ. σειράς - _____
Επιλογές Μηχανήματος - _____
Εκπ. πωλήσεων - _____
Τηλ. εκπροσώπου πωλήσεων - _____
Αριθμός πελάτη - _____
Ημερομηνία εγκατάστασης - _____

HU

HOGYAN RENDELJÜNK ALKATRÉSZEKET - Lásd: fenti diagramm.

Kizárólag TENNANT vagy azzal egyenértékű cserealkatrészeket használjon. Az alkatrészeket és anyagokat meg lehet rendelni az Interneten keresztül, vagy telefonon, faxon és e-mailben.

A pontos szállítás érdekében kövesse az alábbi lépéseket.

1. **(A)** Adja meg a gép típusát.
2. **(B)** Az adatcímke alapján adja meg a gép gyártási számát.
3. **(C)** Ügyeljen arra, hogy a megfelelő gyártási számot válassza ki az alkatrészlistáról.
4. Adja meg a rendelési számot és a mennyiséget. A rendeléshez ne az oldalszámot vagy a hivatkozási számot használja.
5. Adja meg a nevét, a cége nevét, az ügyfélazonosító számát, a számlázási és szállítási címét, a telefonszámát és a rendelési számot.
6. Adjon részletes szállítási utasításokat.

(D) ▽ - a jel csomagra utal
▲ - a jel a csomagban található alkatrészekre utal

A későbbi visszakeresések érdekében kérjük, hogy a rovatokat az első üzembehelyezéskor töltse ki.

Típusszám - _____
Gyártási szám. - _____
A gép felszereltsége - _____
Kereskedelmi képviselő - _____
Kereskedelmi képviselő telefonszáma - _____
Ügyfél azonosító száma - _____
Üzembehelyezés dátuma - _____

IT

COME ORDINARE LE PARTI - Vedere schema precedente.

Utilizzare solo ricambi forniti da TENNANT o equivalenti. Ricambi e forniture possono essere ordinati online, per telefono, via fax o per posta elettronica.

Per ottenere una consegna rapida, seguire i passaggi indicati di seguito.

1. **(A)** Identificare il modello della macchina.
2. **(B)** Identificare il numero di serie della macchina dall'etichetta dei dati.
3. **(C)** Utilizzare il numero di serie corretto presente nell'elenco delle parti di ricambio.
4. Identificare numero di parte e quantità. Non ordinare per numero di pagina o di riferimento.
5. Fornire nome del contatto, nome della società, numero di ID cliente, indirizzo di fatturazione e di spedizione, numero di telefono e numero di ordine di acquisto.
6. Fornire istruzioni dettagliate per la spedizione.

(D) ▽ - identifica un gruppo
▲ - identifica parti comprese in un gruppo

Compilare il modulo al momento dell'installazione per poterlo consultare in futuro in caso di necessità.

N. Modello - _____
N. Serie - _____
Opzioni della macchina - _____
Venditore - _____
Tel. venditore - _____
Numero ID cliente - _____
Data di installazione - _____

JP

パーツの発注方法 ?上記の図を参照してください

TENNANT社製のパーツまたは同等品のみをお使いください。
パーツやサプライ品のご注文は、オンライン、電話、FAX、または手紙でお願いいたします。
確実にお届けできるように、以下の情報お知らせください。

1. **(A)** 製品のモデル名をお知らせください。
2. **(B)** 製品のデータラベルに印刷されているシリアル番号をお知らせください。
3. **(C)** パーツリストを参照して、シリアル番号が正しいかご確認ください。
4. パーツ番号と数量をお知らせください。マニュアル/カタログのページ番号や参照番号でのご注文はご遠慮ください。
5. お客様のお名前、会社名、顧客ID番号、請求/発送先住所、電話番号、注文書番号をお知らせください。
6. 発送に関するご希望があれば、明記してください。

(D) ▽ – アセンブリを示します
▲ – アセンブリに含まれるパーツを示します

後日確認できるように、設置時に記入してください。

モデルNo. – _____
シリアルNo. – _____
製品のオプション– _____
販売代理店 – _____
販売代理店の電話番号 – _____
顧客ID番号 – _____
設置日 – _____

LT

KAIP UŽSISAKYTI DALIS - žr. diagramà viršuje

Naudokite tik "Tennant" kompanijos tiekiamas arba lygiavertes joms dalis. Dalis galite užsisakyti internetu, telefonu, faksu bei elektroniniu paštu.

Kad užsakymas būtų greitai įvykdytas, laikykitės išvardytų taisyklių.

1. **(A)** Nurodykite mašinos modelį.
2. **(B)** Norodykite mašinos serijos numerį, kurį rasite ant duomenų žymės.
3. **(C)** Įsitikinkite, kad nurodomas tikslus serijos numeris iš dalių sàrašo.
4. Nurodykite dalies numerį ir reikiamà kiekį. Neužsakinėkite pagal puslapius ar nuorodos numerius.
5. Nurodykite savo vardà, kompanijos pavadinimà, kliento ID numerį, sàskaitos išrašymo ir vežimo adresà, telefono numerį ir pirkimo užsakymo numerį.
6. Nurodykite išsamias gabenimo instrukcijas.

(D) ▽ - žymi sistemà
▲ - nurodo sistemos dalis

Prašome užpildyti montavimo metu, siekiant gauti informacijà ateityje.

Modelio nr. - _____
Serijos nr. - _____
Mašinos parinktys - _____
Prekybos atstovas - _____
Komivojažieriaus tel. nr. - _____
Pirkėjo ID numeris - _____
Sumontavimo data - _____

LV

KĀ PASŪTĪT REZERVES DETAĻAS - Skat. diagrammu iepriekš

izmantojiet tikai TENNANT Company piegādātās vai tām līdzvērtīgas rezerves detaļas. Daļas un piegādi var pasūtīt internetā, pa tālruni, pa faksu vai pastu.

Lai nodrošinātu savlaicīgu piegādi, sekojiet zemāk aprakstītajiem soļiem.

1. **(A)** Nosakiet mašīnas modeli.
2. **(B)** Nosakiet mašīnas sērijas numuru uz tehnisko datu uzlīmes.
3. **(C)** Pārliecinieties, ka tiek uzrakstīts attiecīgais sērijas numurs no detaļu saraksta.
4. Nosakiet detaļas numuru un skaitu. Veicot pasūtījumus neatsaucieties uz lappušu vai norādes numuriem.
5. Uzrakstiet savu vārdu, uzņēmuma nosaukumi, klienta identitātes numuru, adresi rēķina piesūtīšanai un piegādei un pirkuma pasūtījuma numuru.
6. Sniedziet detalizētu informāciju par piegādi.

(D) ▽ - nosaka ierīci i
▲ - nosaka detaļas, kas ir komplektā ar ierīci

Veicot uzstādīšanu, lūdzam pierakstīst attiecīgo informāciju izmantošanai turpmāk.

Modeļa Nr. - _____
Sērijas Nr. - _____
Iekārtas papildaprīkojums- _____
Pārdošanas pārst. - _____
Pārdošanas pārst. tālr. Nr. - _____
Klienta identitātes numuru- _____
Uzstādīšanas datums- _____

NL

HOE ONDERDELEN TE BESTELLEN - Zie schema hierboven.

Gebruik alleen onderdelen die door TENNANT Company zijn geleverd of soortgelijke onderdelen. Onderdelen en voorraden kunnen online, per telefoon, fax of schriftelijk besteld worden.

Volg de stappen hieronder om een juiste levering te garanderen.

1. **(A)** Bepaal het machinemodel.
2. **(B)** Lees het serienummer van de machine af van het gegevenslabel.
3. **(C)** Zorg dat het juiste serienummer wordt gebruikt uit de onderdelenlijst.
4. Bepaal het artikelnummer en het aantal. Bestel niet aan de hand van pagina's of referentienummers
5. Geef uw naam, bedrijfsnaam, klantnummer, factuur- en leveringsadres, telefoonnummer en bestelnummer op.
6. Geef gedetailleerde leveringsinstructies op.

(D) ▽ - geeft een eenheid aan
▲ - geeft de onderdelen van de eenheid aan

Vul tijdens installatie de onderstaande gegevens in voor eventueel toekomstig gebruik.

Modelnr. - _____
Serienr. - _____
Machine- opties - _____
Verkoopvert. - _____
Telnr. verkoopvert. - _____
Klantnummer - _____
Installatiedatum - _____

NO

HVORDAN BESTILLE DELER - Se diagram over.

Bruk kun deler levert av TENNANT Company eller ekvivalente deler. Deler og forsyninger kan bestilles online, per telefon, per faks eller per post.

Følg trinnene under for å sikre rask levering.

1. **(A)** Angi maskinmodellen.
2. **(B)** Angi maskinens serienummer fra typeskiltet.
3. **(C)** Forsikre deg om at korrekt serienummer brukes fra delelisten.
4. Angi delenummer og antall. Bestill ikke ut fra side- eller referansenumre.
5. Angi ditt navn, firmanavn, kunde- ID- nummer, fakturerings- og forsendelsesadresse, telefonnummer og innkjøpsordrenummer.
6. Angi detaljerte forsendelsesinstruksjoner.

(D) ▽ - angir en delegruppe
▲ - angir deler inkludert i en delegruppe

Fyll ut ved installasjonstidspunkt for fremtidig bruk.

Modellnr. - _____
Serienr.. - _____
Maskinens tillegg - _____
Salgsrep. - _____
Salgsrep. telefonnr. - _____
Kunde- ID- nummer - _____
Installasjonsdato - _____

PL

JAK ZAMAWIAĆ CZĘŚCI - patrz schemat powyżej.

Należy używać wyłącznie części dostarczanych przez firmę TENNANT Company lub równoważnych. Części i dostawy mogą być zamawiane online, przez telefon, faksem lub pocztą.

Aby zapewnić szybką dostawę, należy przestrzegać następujących wskazówek.

1. **(A)** Określić model maszyny.
2. **(B)** Określić numer seryjny maszyny znajdujący się na tabliczce znamionowej.
3. **(C)** Odszukać ten numer seryjny w wykazie części.
4. Określić numer części i ilość. Nie zamawiać na podstawie numeru strony lub liczby porządkowej wykazu.
5. Podać swoje nazwisko, nazwę firmy, numer identyfikacyjny klienta, adres dostawy i dostarczenia rachunku, numer telefonu i numer zamówienia zakupu.
6. Podać dokładne instrukcje dotyczące dostawy.

(D) ▽ - oznacza zespół
▲ - oznacza część w zespole

Prosimy wpisać datę instalacji do późniejszego wykorzystania.

Nr modelu- _____
Nr seryjny - _____
Opcje maszyny - _____
Przedst. sprzedaży - _____
Nr tel. przedst. sprzed. - _____
Nr ident. klienta - _____
Data instalacji - _____

PT G

COMO ENCOMENDAR PEÇAS - Consulte o diagrama acima.

Utilize apenas peças fornecidas pela TENNANT Company ou equivalentes. As peças e consumíveis podem ser encomendados online, por telefone, fax ou correio.

Siga os passos abaixo para garantir uma entrega rápida.

1. **(A)** Identifique o modelo da máquina.
2. **(B)** Identifique o número de série da máquina que se encontra na etiqueta de dados.
3. **(C)** Certifique- se de que usa o número de série correcto da lista de peças.
4. Identifique o número de produto e a quantidade. Não encomende através de números de página ou de referência.
5. Forneça o seu nome, o nome da empresa, o número de ID do cliente, os endereços de facturação e entrega, o número de telefone e o número da nota de encomenda.
6. Forneça instruções de entrega detalhadas.

(D) ▽ - identifica uma unidade
▲ - identifica peças incluídas numa unidade

Preencha na altura da instalação para futura referência.

Modelo nº - _____
Nº de série - _____
Opções da máquina - _____
Vendedor - _____
Telefone do vendedor - _____
Número de ID do cliente - _____
Data de instalação - _____

RU

КАК ЗАКАЗАТЬ ЗАПЧАСТИ - См. схему ниже.

Используйте только запчасти, поставляемые компанией TENNANT или их аналоги. Запасные части и расходные материалы можно заказать в режиме онлайн, телефоном, факсом или электронной почтой.

Для своевременной доставки следуйте описанным ниже инструкциям.

1. **(A)** Укажите модель машины.
2. **(B)** Укажите серийный номер машины, обозначенный на табличке технических данных.
3. **(C)** Удостоверьтесь, что надлежащий серийный номер перечислен в списке запчастей.
4. Укажите номер детали и нужное количество. Не используйте номера страниц или ссылок.
5. Укажите свое имя, название компании, идентификационный номер покупателя, расчетный адрес и адрес доставки, телефонный номер и номер заказа на покупку.
6. Укажите подробные сведения о доставке.

(D) ▽ - означает узел
▲ - обозначает деталь узла

Во время установки заполните, пожалуйста, эти сведения для того, чтобы ссылаться в дальнейшем.

Модель Э - _____
Серийный Э - _____
Опции машины - _____
Торговый представитель - _____
Телефон торгового представителя - _____
Идент. номер покупателя - _____
Дата установки - _____

SE

BESTÄLLNING AV RESERVDELAR - Se ovanstående schema.

Använd endast delar från Tennant Company eller likvärdiga. Delar och material kan beställas online, telefoniskt, per fax eller post.

Följ nedanstående steg för en snabb leverans.

1. **(A)** Identifiera maskinens modell.
2. **(B)** Identifiera maskinens serienummer på typskylten.
3. **(C)** Kontrollera att rätt serienummer används från dellistan.
4. Identifiera artikelnumret och mängden. Beställ inte med hjälp av sido- eller referensnummer.
5. Uppge ditt namn, företagets namn, kundens ID- nummer, faktura- och leveransadress, telefonnummer och ordernumret vid inköp.
6. Ge detaljerade transportanvisningar.

(D) ▽ - identifierar en modul
▲ - identifierar delar som ingår i en modul

Fyll i vid installation och spar för framtida bruk.

ModellNr. - _____
Serienr. - _____
Tilvalsutrustning - _____
Försäljare - _____
Försäljarens tel.nr. - _____
Kundnummer - _____
Installationsdatum - _____

SK

POSTUP PRI OBJEDNÁVANÍ ČASTÍ - Pozri vyššie uvedený diagram.

Vyu ívajte výhradne dielce dodané spoločnos ou TENNANT, alebo ich ekvivalenty. Dielce a polo ky je mo né objedna online, telefonicky, faxom, alebo poštou.

Na zabezpečenie promptného doručenia sa riaďte nasledovnými krokmi.

1. **(A)** Identifikujte model stroja.
2. **(B)** Z etikety s údajmi identifikujte sériové číslo stroja.
3. **(C)** Ubezpečte sa, e ste zadali správne sériové číslo zo zoznamu dielcov.
4. Identifikujte číslo dielu a mno stvo. Neobjednávajte pomocou čísel strán, alebo referenčných čísel.
5. Zadajte Vaše meno, meno spoločnosti, ID číslo zákazníka, fakturačnú a prepravnú adresu, telefónne číslo a objednávacie číslo dielu.
6. Uveďte podrobné prepravné pokyny.

(D) ▽ - identifikuje sadu
▲ - identifikuje časti sady

Vyplňte prosím pri inštalácii pre prípad potreby v budúcnosti.

č. modelu - _____
Sériové č. - _____
Zvláštne príslušenstvo stroja - _____
Obchodné zastúpenie - _____
Obch. zastúpenie tel. č. - _____
ID č. zákazníka - _____
Dátum inštalácie - _____

SL

NAROČANJE NADOMESTNIH DELOV - glejte zgornjo sliko.

Uporabljajte samo originalne nadomestne dele Tennant ali enakovredne dele. Dele in potrošni material lahko naročite prek spleta, po telefonu, faksu ali pošti.

Za zagotovitev čimbolj hitre dostave sledite spodnjim navodilom.

1. **(A)** Ugotovite model stroja.
2. **(B)** Na ploščici s podatki poiščite serijsko številko stroja.
3. **(C)** Poskrbite, da na seznamu nadomestnih delov poiščete pravilno serijsko številko.
4. Poiščite številko dela in potrebno količino. Pri naročilih ne navajajte strani ali referenčne številke.
5. Navedite svoje ime, ime podjetja, ID številko stranke, naslova za dostavo in izdajo računa, telefonsko številkoin številko naročila.
6. Navedite podrobna navodila za dostavo.

(D) ▽ - označuje sklop
▲ - označuje dele sklopa

Prosimo, da ob vgradnji izpolnite te podatke, da vam bodo v prihodnje na voljo.

Št. modela - _____
Serijska številka - _____
Dodatna oprema stroja - _____
Prodajni predstavnik - _____
Telefonska št. prodajnega predstavnika - _____
Številka stranke - _____
Datum vgradnje - _____

TR

PARÇALARIN SİPARİŞ EDİLMESİ - Yukarıdaki şemaya bakın.

Yalnızca TENNANT Company'den sağlanan veya eşdeğerde parçalar kullanın. Parça veya sarf malzemeleri çevrimiçi olarak, telefonla, faksla veya postayla sipariş edilebilir.

Zamanında teslimatı sağlamak için aşağıdaki adımları izleyin.

1. **(A)** Makine modelini belirtin.
2. **(B)** Veri etiketinden makine seri numarasını belirtin.
3. **(C)** Parça listesinden uygun seri numarasının kullanıldığından emin olun.
4. Parça numarasını ve miktarını belirtin. Sayfa veya referans numaralarını kullanarak sipariş vermeyin.
5. Adınızı, şirketinizin adını, müşteri kimlik numaranızı, faturalama ve sevkıyat adreslerini, telefon numarasını ve satın alma siparişi numarasını belirtin.
6. Ayrıntılı sevkıyat talimatlarını belirtin.

(D) ▽ - bir tertibatı belirtir
▲ - tertibattaki parçaları belirtir

İleri tarihlerde başvurmak için lütfen kurulum sırasında doldurun.

Model No. - _____
Seri No. - _____
Makine Seçenekleri - _____
Satış Temsilcisi - _____
Satış Temsilcisi telefon no. - _____
Müşteri Kimlik Numarası - _____
Kurulum Tarihi - _____

RECOMMENDED MAINTENANCE ITEMS

GENERAL RECOMMENDED MAINTENANCE ITEMS 11

STANDARD PARTS

HANDLE GROUP, 120V 12
HANDLE GROUP, 230V 14
FRAME GROUP, 120V 16
FRAME GROUP, 230V 18
TANKS AND SHROUD GROUP 20
TANK COVER GROUP 22
VACUUM FAN GROUP 24
SOLUTION GROUP 26
SCRUB HEAD GROUP, 120V 28
SCRUB HEAD GROUP, 230V 30
ROLLER TOOL GROUP 32
ELECTRICAL DIAGRAM, 100V / 120V 34
ELECTRICAL DIAGRAM, 230V 35
WIRE HARNESS, CHASSIS 36

OPTIONS

FLOOR TOOL GROUP, 8 in / 203 mm 37
HAND TOOL GROUP, 4 in / 101 mm 39
PUMP-UP CARPET SPRAYER 40
DOCUMENTATION GROUP 41

GENERAL RECOMMENDED MAINTENANCE ITEMS

Part No.	Serial Number	Description	Qty.
1230230	(30000000- 40000000)	Wheel, 03.0d 0.88w 0.31b,[Ch]	2
1039073	(30000000- 40000000)	Wheel Assy, 8.0d 2.0w 0.5b W/Brg	2
1074694	(30000000- 40000000)	Filter, Tube, Soltn, 200mesh	1
1044370	(30000000- 40000000)	Ball, Float, W/O Cage	1
1036090	(30000000- 40000000)	Seal, Vacuum [Trex]	2
1052876	(30000000- 40000000)	Gasket, Tank	2
605317	(30000000- 40000000)	Roller, Sqge, 1.35od X 1.48l [Delrin]	2
1028953	(30000000- 40000000)	Roller Assy, Readyspace	2
9004282	(30000000- 40000000)	Belt Kit, W/ Installation Tool [Qty 2]	1
1034819	(30000000- 40000000)	Gasket, Tool ,Cover	2

HANDLE GROUP, 120V

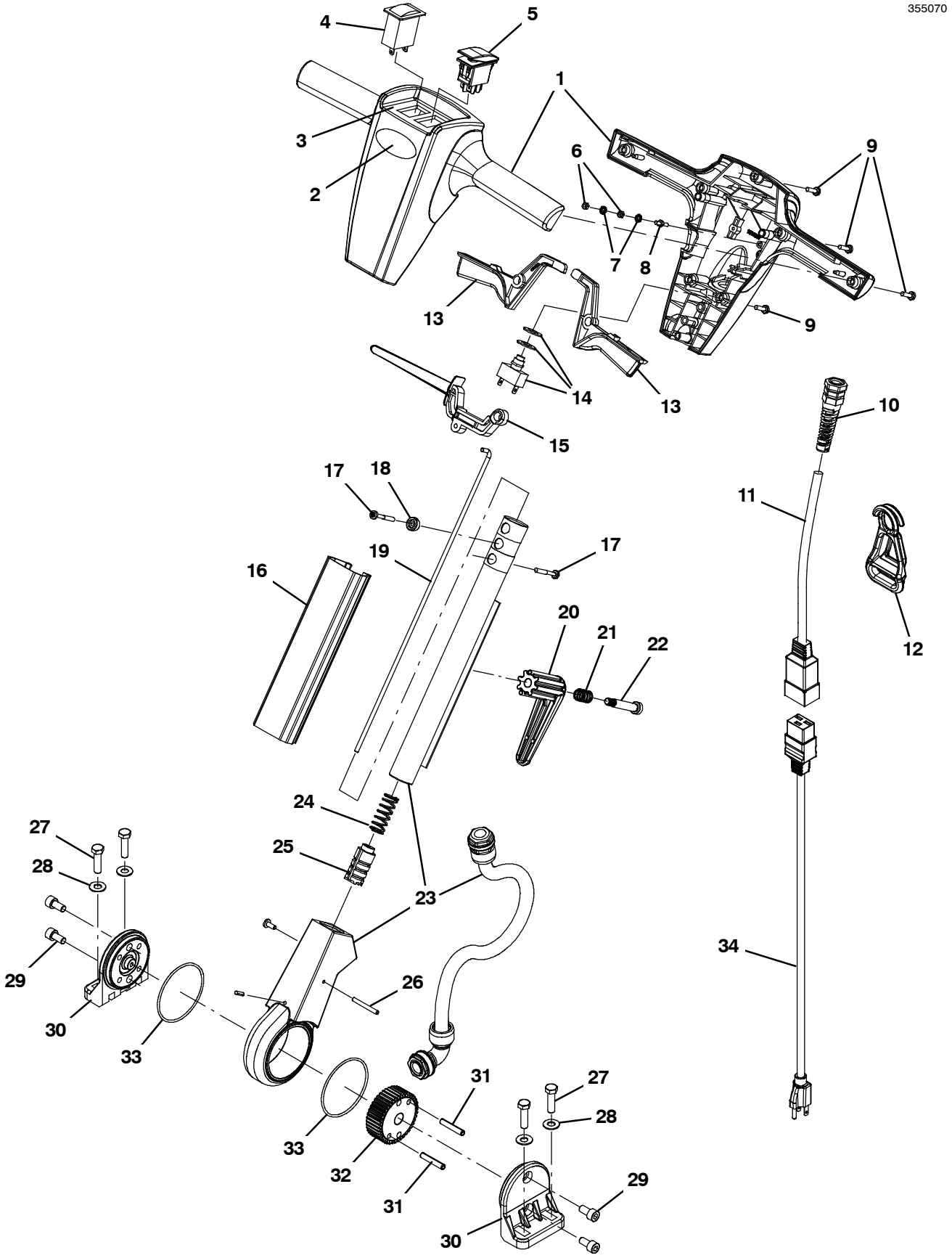

HANDLE GROUP, 120V

	Ref.	Part No.	Serial Number	Description	Qty.
∇		9005507	(30000000- 40000000)	Handle, Tennant R3 [120 Volt]	1
▲∇	1	9004318	(30000000- 40000000)	Cover, Handle Front/Rear Tennant R3 Kit	1
▲▲	2	1042589	(30000000- 40000000)	Label, Logo, 02.50l, White [Tennant]	1
▲▲	3	1034592	(30000000- 40000000)	Label, Opertnl, Instrmt Panl, Readyspace	1
▲	4	1038375	(30000000- 40000000)	Gauge, Ammeter, 120vac, 5.0a [Rlr Press]	1
▲	5	602919	(30000000- 40000000)	Switch, Rocker, Dpdt, On / On	1
▲	6	42368	(30000000- 40000000)	Nut, Hex, Std, M4 X 0.70, 8	2
▲	7	140061	(30000000- 40000000)	Washer, Lock, Ext, 08, Pl	2
▲	8	1034952	(30000000- 40000000)	Screw, Hex, M4 X 0.7 X 12, Dbl Thrd	1
▲	9	1043573	(30000000- 40000000)	Screw, #10- 14 X 0.675, Spl[Shcs,Selftap]	7
▲	10	130166	(30000000- 40000000)	Grip, Cord, Strainrelief Pg- 11 W/Nut Bk	1
▲	11	1042410	(30000000- 40000000)	Cord, 14ga /3, 16.0l, W/ Receptacle, Yel	1
▲	12	1037147	(30000000- 40000000)	Clip, Cord, Strainrelief, Black	1
▲	13	1033893	(30000000- 40000000)	Lever, Cntrl, Switch [Trex]	2
▲	14	9008568	(30000000- 40000000)	Switch Kit, W/ Washers, Fr/ F/1063165	1
▲	15	1034945	(30000000- 40000000)	Lever, Adjmt, Handle	1
▲	16	1034181	(30000000- 40000000)	Cover, Handle, Tennant [Trex]	1
▲	17	1043572	(30000000- 40000000)	Screw, #10- 14 X 01.5, Spl[Shcs Selftap]	2
▲	18	1034176	(30000000- 40000000)	Bushing, Flng, 5mmb 12mmd 8mml, Pa6	1
▲	19	1034180	(30000000- 40000000)	Rod, Release [Trex]	1
▲	20	603104	(30000000- 40000000)	Hook, Cord, Blk [Quick- Release]	1
▲	21	603108	(30000000- 40000000)	Spring, Cmpr, Switch	1
▲	22	140239	(30000000- 40000000)	Bolt, Shld, .38d X 1.75, .31- 18	1
▲	23	1045239	(30000000- 40000000)	Tube, Assy, Handle [W/Harnesses]	1
▲	24	1013295	(30000000- 40000000)	Spring, Cmpr [2100 Series]	1
▲	25	9006059	(30000000- 40000000)	Plunger Kit, Handle	1
▲	26	1034924	(30000000- 40000000)	Pin, Roll, 04mmd X 40mml	1
▲	27	1016399	(30000000- 40000000)	Screw, Hex, M8 X 1.25 X 30, Nl, Ss	4
▲	28	140027	(30000000- 40000000)	Washer, Flat, 0.35b 0.75d .04, Ss	4
▲	29	49609	(30000000- 40000000)	Screw, Soc, M8 X 1.25 X 16, 12.9	4
▲	30	1000307	(30000000- 40000000)	Handle, Pivot, Half	2
▲	31	1034155	(30000000- 40000000)	Pin, Roll, 06mmd X 36mml	2
▲	32	1034872	(30000000- 40000000)	Gear, Lock, Handle	1
▲	33	612422	(30000000- 40000000)	Seal, Org, Gear Seat	2
	34	1042403	(30000000- 40000000)	Cord, Power, 1.5mm /3 Yel[2x15m 50ft Us]	1

∇ ASSEMBLY

▲ INCLUDED IN ASSEMBLY

HANDLE GROUP, 230V

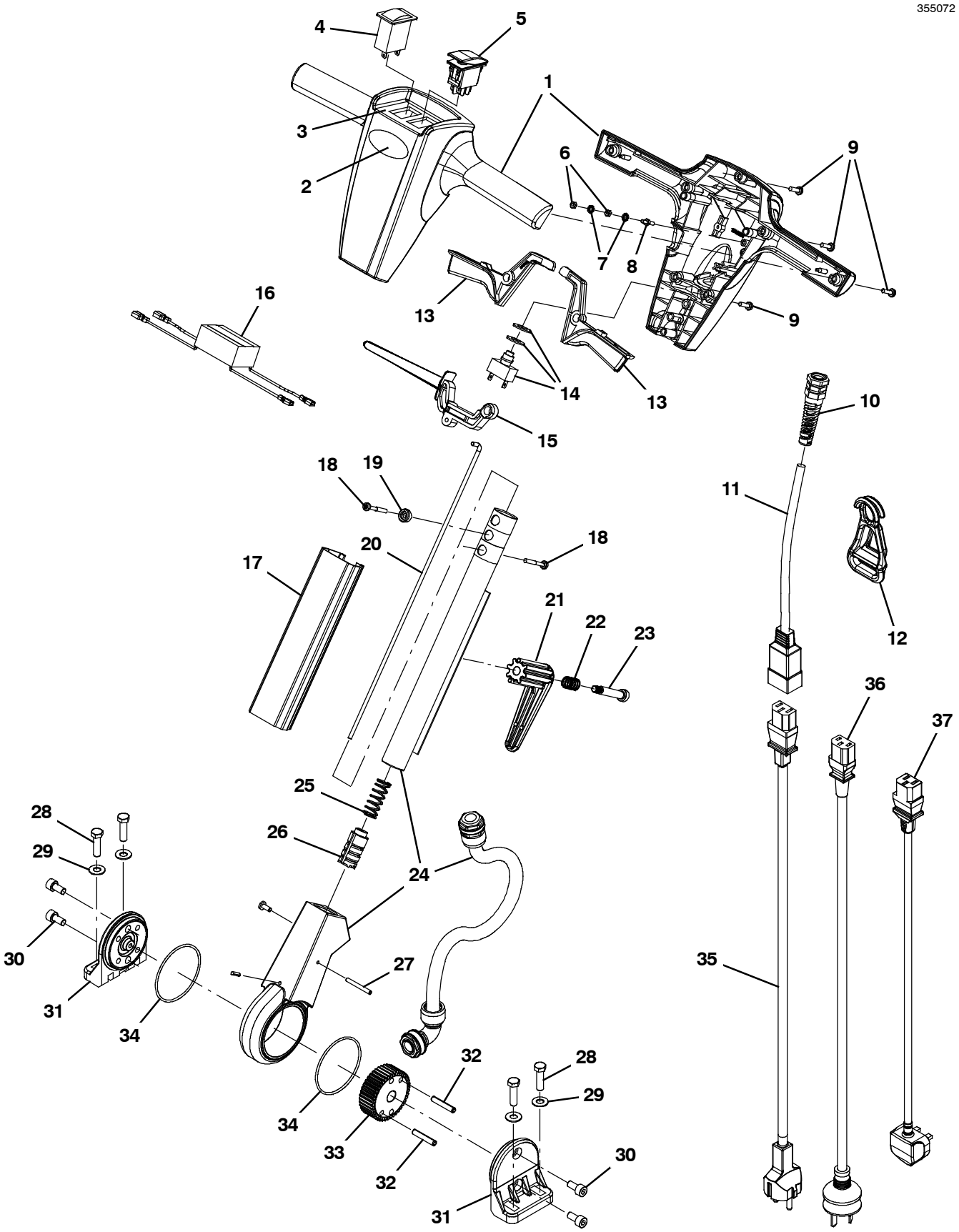

HANDLE GROUP, 230V

	Ref.	Part No.	Serial Number	Description	Qty.
∇		9005510	(30000000- 40000000)	Handle, Tennant R3 [230 Volt]	1
▲∇	1	9004318	(30000000- 40000000)	Cover, Handle Front/Rear Tennant R3 Kit	1
▲▲	2	1042589	(30000000- 40000000)	Label, Logo, 02.50l, White [Tennant]	1
▲▲	3	1034592	(30000000- 40000000)	Label, Opertnl, Instrmt Panl, Readyspace	1
▲	4	1035742	(30000000- 40000000)	Gauge, Ammeter, 230vac, 2.25a [Rlr Prs]	1
▲	5	602919	(30000000- 40000000)	Switch, Rocker, Dpdt, On / On	1
▲	6	42368	(30000000- 40000000)	Nut, Hex, Std, M4 X 0.70, 8	2
▲	7	140061	(30000000- 40000000)	Washer, Lock, Ext, 08, Pl	2
▲	8	1034952	(30000000- 40000000)	Screw, Hex, M4 X 0.7 X 12, Dbl Thrd	1
▲	9	1043573	(30000000- 40000000)	Screw, #10- 14 X 0.675, Spl[Shcs,Selftap]	7
▲	10	130166	(30000000- 40000000)	Grip, Cord, Strainrelief Pg- 11 W/Nut Bk	1
▲	11	1040343	(30000000- 40000000)	Cord, 14ga /3, 16.0l, W/ Receptacle, Blk	1
▲	12	1037147	(30000000- 40000000)	Clip, Cord, Strainrelief, Black	1
▲	13	1033893	(30000000- 40000000)	Lever, Cntrl, Switch [Trex]	2
▲	14	9008568	(30000000- 40000000)	Switch Kit, W/ Washers, Fr/ F/1063165	1
▲	15	1034945	(30000000- 40000000)	Lever, Adjmt, Handle	1
▲	16	1054252	(30000000- 40000000)	Filter, Handle, 250 Vac, 50/60hz, 8amp	1
▲	17	1034181	(30000000- 40000000)	Cover, Handle, Tennant [Trex]	1
▲	18	1043572	(30000000- 40000000)	Screw, #10- 14 X 01.5, Spl[Shcs Selftap]	2
▲	19	1034176	(30000000- 40000000)	Bushing, Flng, 5mmb 12mmd 8mml, Pa6	1
▲	20	1034180	(30000000- 40000000)	Rod, Release [Trex]	1
▲	21	603104	(30000000- 40000000)	Hook, Cord, Blk [Quick- Release]	1
▲	22	603108	(30000000- 40000000)	Spring, Cmpr, Switch	1
▲	23	140239	(30000000- 40000000)	Bolt, Shld, .38d X 1.75, .31- 18	1
▲	24	1045239	(30000000- 40000000)	Tube, Assy, Handle [W/Harnesses]	1
▲	25	1013295	(30000000- 40000000)	Spring, Cmpr [2100 Series]	1
▲	26	9006059	(30000000- 40000000)	Plunger Kit, Handle	1
▲	27	1034924	(30000000- 40000000)	Pin, Roll, 04mmd X 40mml	1
▲	28	1016399	(30000000- 40000000)	Screw, Hex, M8 X 1.25 X 30, Nl, Ss	4
▲	29	140027	(30000000- 40000000)	Washer, Flat, 0.35b 0.75d .04, Ss	4
▲	30	49609	(30000000- 40000000)	Screw, Soc, M8 X 1.25 X 16, 12.9	4
▲	31	1000307	(30000000- 40000000)	Handle, Pivot, Half	2
▲	32	1034155	(30000000- 40000000)	Pin, Roll, 06mmd X 36mml	2
▲	33	1034872	(30000000- 40000000)	Gear, Lock, Handle	1
▲	34	612422	(30000000- 40000000)	Seal, Org, Gear Seat	2
	35	1035571	(30000000- 40000000)	Cord, Extn, 1.5mm /3 [2x20m, Ce]	1
	36	1036912	(30000000- 40000000)	Cord, Power, 1.5mm /3 Blk [2x15m, Aus]	1
	37	1036891	(30000000- 40000000)	Cord, Power, 1.5mm /3 Blk [2x20m,Uk]	1

∇ ASSEMBLY

▲ INCLUDED IN ASSEMBLY

FRAME GROUP, 120V

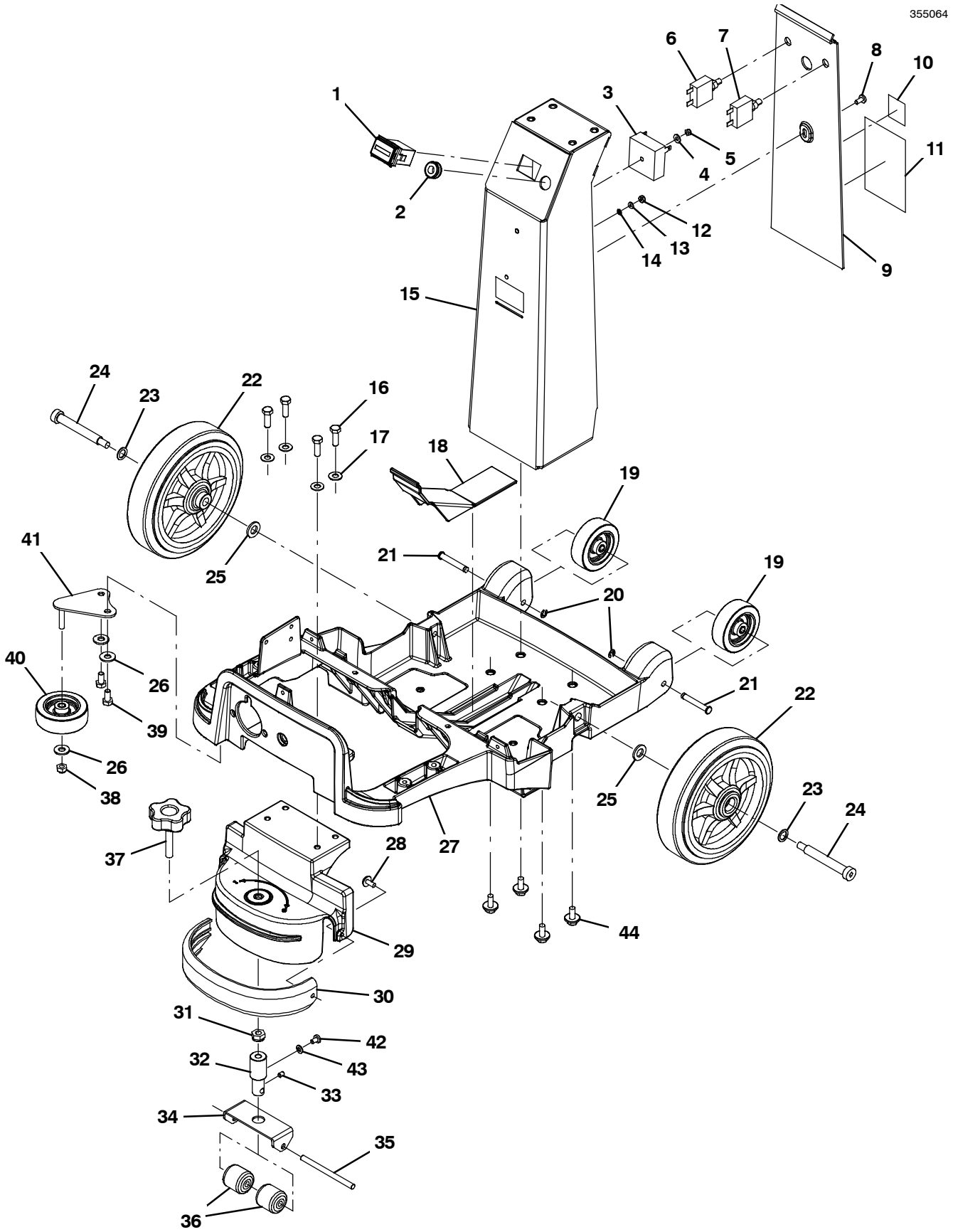

FRAME GROUP, 120V

	Ref.	Part No.	Serial Number	Description	Qty.
	1	1064038	(30000000- 40000000)	Gauge, Hourmeter, 05- 277 Volt, Ac / Dc	1
	2	86726	(30000000- 40000000)	Grommet, Rbr, 0.44id, F/0.5h, .19 Matl	1
	3	1032018	(30000000- 40000000)	Module, Timer, 120vac [Trex Readyspace]	1
	4	01683	(30000000- 40000000)	Washer, Flat, 10, Ss	1
	5	09739	(30000000- 40000000)	Nut, Hex, Lock, M5 X 0.80, Nl, Ss	1
	6	383720	(30000000- 40000000)	Circuitbreaker, 05.0a, Resetable	1
	7	383722	(30000000- 40000000)	Circuitbreaker, 15.0a, Resetable	1
	8	74027	(30000000- 40000000)	Screw, Pan, Phl, M6 X 1.00 X 12, Nl, Pl	1
∇	9	9004275	(30000000- 40000000)	Cover Kit, Column , W/ Label [5gal 120v]	1
▲	10	NA	(30000000- 40000000)	Label, Safety, 120vac [Etl]	1
▲	11	1039105	(30000000- 40000000)	Label,Warning,Ac Scrb/Extr [En/Fr/Es/Jp]	1
	12	1044427	(30000000- 40000000)	Nut, Hex, Lock, #8- 32, Nl, Ss	1
	13	41578	(30000000- 40000000)	Washer, Flat, 06, Ss	1
	14	02938	(30000000- 40000000)	Washer, Lock, Int, 08, Ss	1
	15	9004274	(30000000- 40000000)	Column Kit, Sppt, W/ Label [5 Gal]	1
	16	1015852	(30000000- 40000000)	Screw, Hex, M8 X 1.25 X 25, Nl, Fl, Ss	4
	17	140027	(30000000- 40000000)	Washer, Flat, 0.35b 0.75d .04, Ss	4
	18	1031418	(30000000- 40000000)	Cover, Frame, Rear [Trex]	1
	19	1230230	(30000000- 40000000)	Wheel, 03.0d 0.88w 0.31b,[Ch]	2
	20	1035139	(30000000- 40000000)	Ring, Retaining, Ext, 0.31d, E- Type	2
	21	1035137	(30000000- 40000000)	Pin, Clevis, Grvd 0.31d X 2.00l, Ss	2
	22	1039073	(30000000- 40000000)	Wheel Assy, 8.0d 2.0w 0.5b W/Brg	2
	23	1038770	(30000000- 40000000)	Washer, Flat, 0.50b 0.75d 0.06, Ss	2
	24	1033757	(30000000- 40000000)	Bolt, Shld, .50 X 3.25, .38- 16, Ss	2
	25	33925	(30000000- 40000000)	Washer, Flat, M12, Ss	2
	26	01685	(30000000- 40000000)	Washer, Flat, 0.38b 0.88d .08, Ss	3
	27	1031527	(30000000- 40000000)	Frame (Machined)	1
	28	1019349	(30000000- 40000000)	Screw, Trs, M6 X 1.00 X 16, Ss, Sems	2
	29	1051665	(30000000- 40000000)	Bracket, Adjustment, Head	1
	30	1036668	(30000000- 40000000)	Bumper, Front	1
	31	08714	(30000000- 40000000)	Nut, Hex, Lock, M10 X 1.5, Nl, Ss	1
	32	1051666	(30000000- 40000000)	Adjuster, Roller	1
	33	09162	(30000000- 40000000)	Screw, Set, Soc, M6 X 1.00 X 8, Nl	1
	34	1035496	(30000000- 40000000)	Bracket, Roller	1
	35	1035519	(30000000- 40000000)	Bar, Rnd, Stl, 0.31d X 4.09l, 2cham	1
	36	605317	(30000000- 40000000)	Roller, Sqge, 1.35od X 1.48l [Delrin]	2
	37	1036002	(30000000- 40000000)	Knob, Adj, M10 X50 Stud, Blk	1
	38	08713	(30000000- 40000000)	Nut, Hex, Lock, M8 X 1.25, Nl, Ss	1
	39	49826	(30000000- 40000000)	Screw, Hex, M8 X 1.25 X 16, Nl, Ss	2
	40	1230230	(30000000- 40000000)	Wheel, 03.0d 0.88w 0.31b,[Ch]	1
	41	1034805	(30000000- 40000000)	Bracket, Bumper Wheel	1
	42	48732	(30000000- 40000000)	Screw, Pan, Phl, M6 X 1.00 X 10, Ss	1
	43	140016	(30000000- 40000000)	Washer, Lock, Split, 0.25, Ss	1
	44	1020341	(30000000- 40000000)	Screw, Hex, M8 X 1.25 X 20, Ss, Sems	4
	N/S	1033926	(30000000- 40000000)	Harness, Chassis, Ele [T- Rex Readyspace]	1

∇ ASSEMBLY

▲ INCLUDED IN ASSEMBLY

N/S = NOT SHOWN

FRAME GROUP, 230V

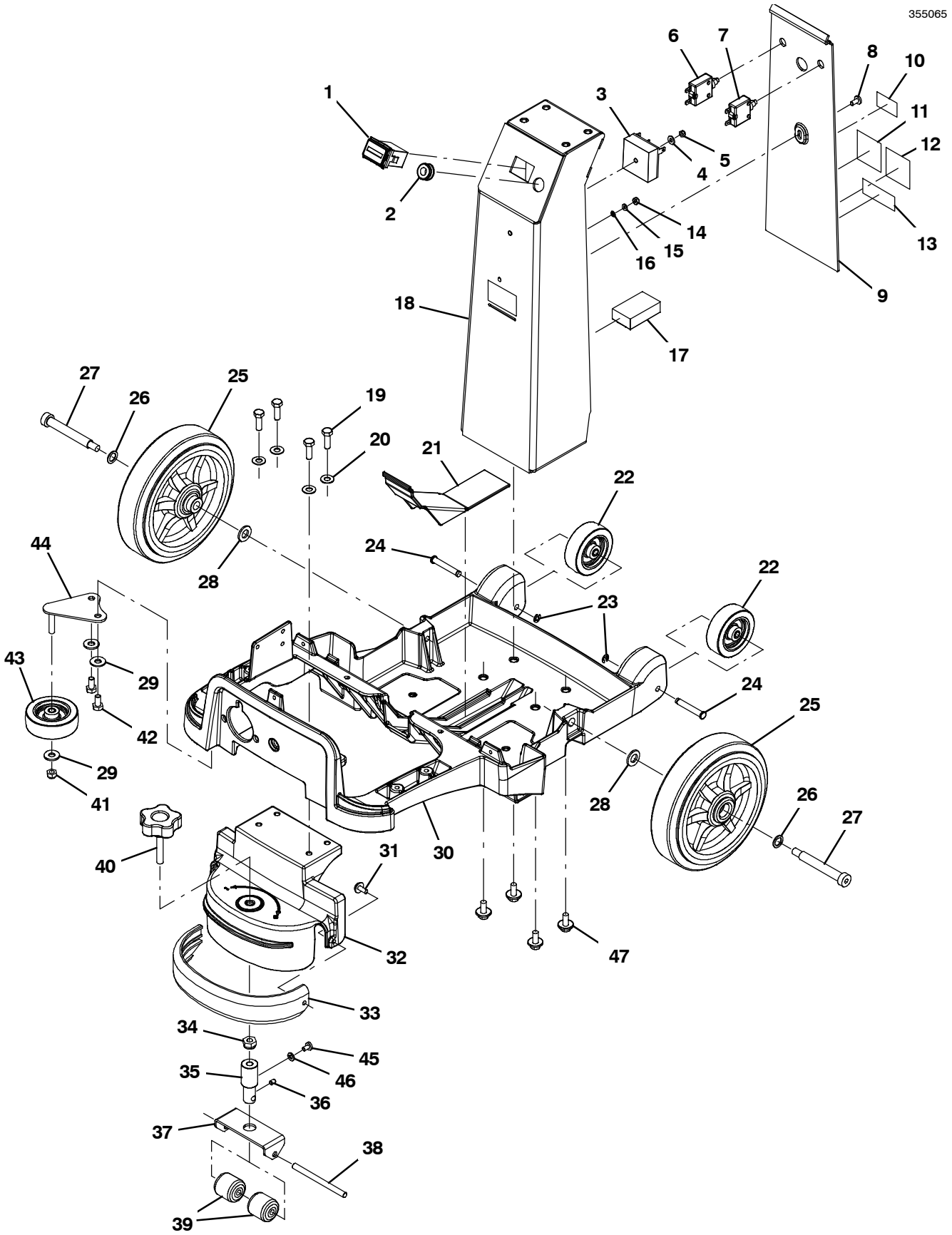

FRAME GROUP, 230V

	Ref.	Part No.	Serial Number	Description	Qty.
	1	1064038	(30000000- 40000000)	Gauge, Hourmeter, 05- 277 Volt, Ac / Dc	1
	2	86726	(30000000- 40000000)	Grommet, Rbr, 0.44id, F/0.5h, .19 Matl	1
	3	1032245	(30000000- 40000000)	Module, Timer, 240vac[T- Rex Readyspace]	1
	4	01683	(30000000- 40000000)	Washer, Flat, 10, Ss	1
	5	09739	(30000000- 40000000)	Nut, Hex, Lock, M5 X 0.80, Nl, Ss	1
	6	1037100	(30000000- 40000000)	Circuitbreaker, 2.5 Amp, 230 Volt	1
	7	1037086	(30000000- 40000000)	Circuitbreaker, 7.5 Amp, 230 Volt	1
	8	74027	(30000000- 40000000)	Screw, Pan, Phl, M6 X 1.00 X 12, Nl, Pl	1
∇	9	9004294	(30000000- 40000000)	Column, Cover W/ Labels 5 Gal 230v Kit	1
▲	10	NA	(30000000- 40000000)	Label, Safety, 230Vac [Ce, C- Tic]	1
▲	11	1030494	(30000000- 40000000)	Label, Hzrd, Flammable Matl, Ce	1
▲	12	1028077	(30000000- 40000000)	Label [Read Manual, Iso]	1
▲	13	993852	(30000000- 40000000)	Label, Warning [Electrical Hazard]	1
	14	1044427	(30000000- 40000000)	Nut, Hex, Lock, #8- 32, Nl, Ss	1
	15	41578	(30000000- 40000000)	Washer, Flat, 06, Ss	1
	16	02938	(30000000- 40000000)	Washer, Lock, Int, 08, Ss	1
	17	1043600	(30000000- 40000000)	Filter, Pump, 250 Vac, 3a, 50/60hz	1
	18	9004274	(30000000- 40000000)	Column Kit, Sppt, W/ Label [5 Gal]	1
	19	1015852	(30000000- 40000000)	Screw, Hex, M8 X 1.25 X 25, Nl, Fl, Ss	4
	20	140027	(30000000- 40000000)	Washer, Flat, 0.35b 0.75d .04, Ss	4
	21	1031418	(30000000- 40000000)	Cover, Frame, Rear [Trex]	1
	22	1230230	(30000000- 40000000)	Wheel, 03.0d 0.88w 0.31b,[Ch]	2
	23	1035139	(30000000- 40000000)	Ring, Retaining, Ext, 0.31d, E- Type	2
	24	1035137	(30000000- 40000000)	Pin, Clevis, Grvd 0.31d X 2.00l, Ss	2
	25	1039073	(30000000- 40000000)	Wheel Assy, 8.0d 2.0w 0.5b W/Brg	2
	26	1038770	(30000000- 40000000)	Washer, Flat, 0.50b 0.75d 0.06, Ss	2
	27	1033757	(30000000- 40000000)	Bolt, Shld, .50 X 3.25, .38- 16, Ss	2
	28	33925	(30000000- 40000000)	Washer, Flat, M12, Ss	2
	29	01685	(30000000- 40000000)	Washer, Flat, 0.38b 0.88d .08, Ss	3
	30	1031527	(30000000- 40000000)	Frame (Machined)	1
	31	1019349	(30000000- 40000000)	Screw, Trs, M6 X 1.00 X 16, Ss, Sems	2
	32	1051665	(30000000- 40000000)	Bracket, Adjustment, Head	1
	33	1036668	(30000000- 40000000)	Bumper, Front	1
	34	08714	(30000000- 40000000)	Nut, Hex, Lock, M10 X 1.5, Nl, Ss	1
	35	1051666	(30000000- 40000000)	Adjuster, Roller	1
	36	09162	(30000000- 40000000)	Screw, Set, Soc, M6 X 1.00 X 8, Nl	1
	37	1035496	(30000000- 40000000)	Bracket, Roller	1
	38	1035519	(30000000- 40000000)	Bar, Rnd, Stl, 0.31d X 4.09l, 2cham	1
	39	605317	(30000000- 40000000)	Roller, Sqge, 1.35od X 1.48l [Delrin]	2
	40	1036002	(30000000- 40000000)	Knob, Adj, M10 X50 Stud, Blk	1
	41	08713	(30000000- 40000000)	Nut, Hex, Lock, M8 X 1.25, Nl, Ss	1
	42	49826	(30000000- 40000000)	Screw, Hex, M8 X 1.25 X 16, Nl, Ss	2
	43	1230230	(30000000- 40000000)	Wheel, 03.0d 0.88w 0.31b,[Ch]	1
	44	1034805	(30000000- 40000000)	Bracket, Bumper Wheel	1
	45	48732	(30000000- 40000000)	Screw, Pan, Phl, M6 X 1.00 X 10, Ss	1
	46	140016	(30000000- 40000000)	Washer, Lock, Split, 0.25, Ss	1
	47	1020341	(30000000- 40000000)	Screw, Hex, M8 X 1.25 X 20, Ss, Sems	4
	N/S	1033926	(30000000- 40000000)	Harness, Chassis, Ele [T- Rex Readyspace]	1

∇ ASSEMBLY

▲ INCLUDED IN ASSEMBLY

N/S = NOT SHOWN

TANKS AND SHROUD GROUP

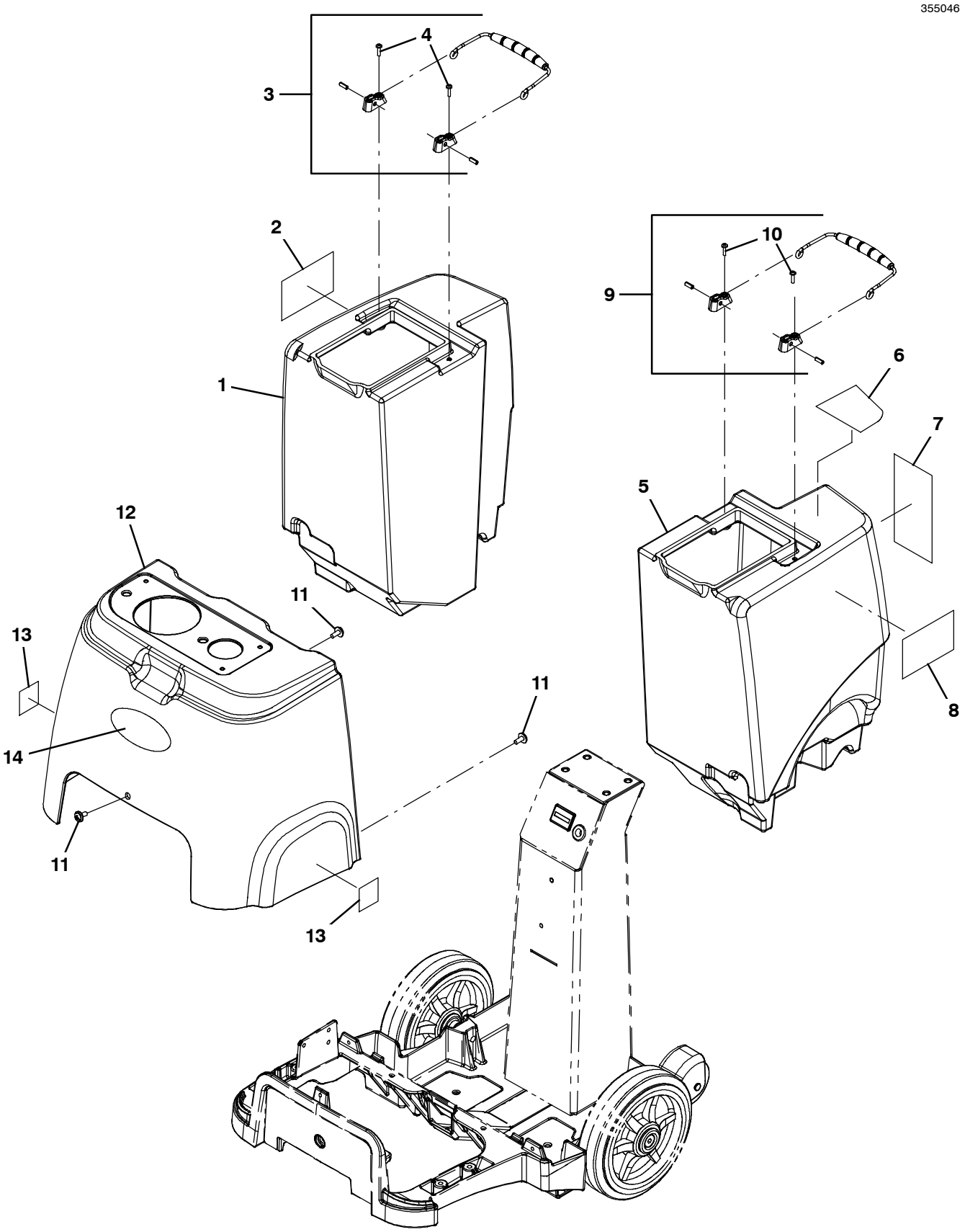

TANKS AND SHROUD GROUP

	Ref.	Part No.	Serial Number	Description	Qty.
∇	1	9004303	(30000000- 40000000)	Tank, Rec W/ Labels Tennant 5 Gal Kit	1
▲	2	1039086	(30000000- 40000000)	Label, Side [R3 Readyspace]	1
▲∇	3	9004285	(30000000- 40000000)	Handle, Tank Kit	1
▲▲	4	24265	(30000000- 40000000)	Screw, Pan, Phl, M4 X 0.70 X 16, Ss	2
∇	5	9004305	(30000000- 40000000)	Tank, Sol W/ Labels Tennant 5 Gal Kit	1
▲	6	1038968	(30000000- 40000000)	Label, Soltn, Tank [5.0 Gal]	1
▲	7	1040113	(30000000- 40000000)	Label, Oper, Instr [Readyspace]	1
▲	8	1039086	(30000000- 40000000)	Label, Side [R3 Readyspace]	1
▲∇	9	9004285	(30000000- 40000000)	Handle, Tank Kit	1
▲▲	10	24265	(30000000- 40000000)	Screw, Pan, Phl, M4 X 0.70 X 16, Ss	2
	11	1019349	(30000000- 40000000)	Screw, Trs, M6 X 1.00 X 16, Ss, Sems	3
∇	12	9004298	(30000000- 40000000)	Shroud, W/ Labels Tennant 5 Gal Kit	1
▲	13	578769	(30000000- 40000000)	Decal, Moving Parts Textless	2
▲	14	1039084	(30000000- 40000000)	Label, Logo, White, Tennant, 5.5”Lg	1

∇ ASSEMBLY

▲ INCLUDED IN ASSEMBLY

TANK COVER GROUP

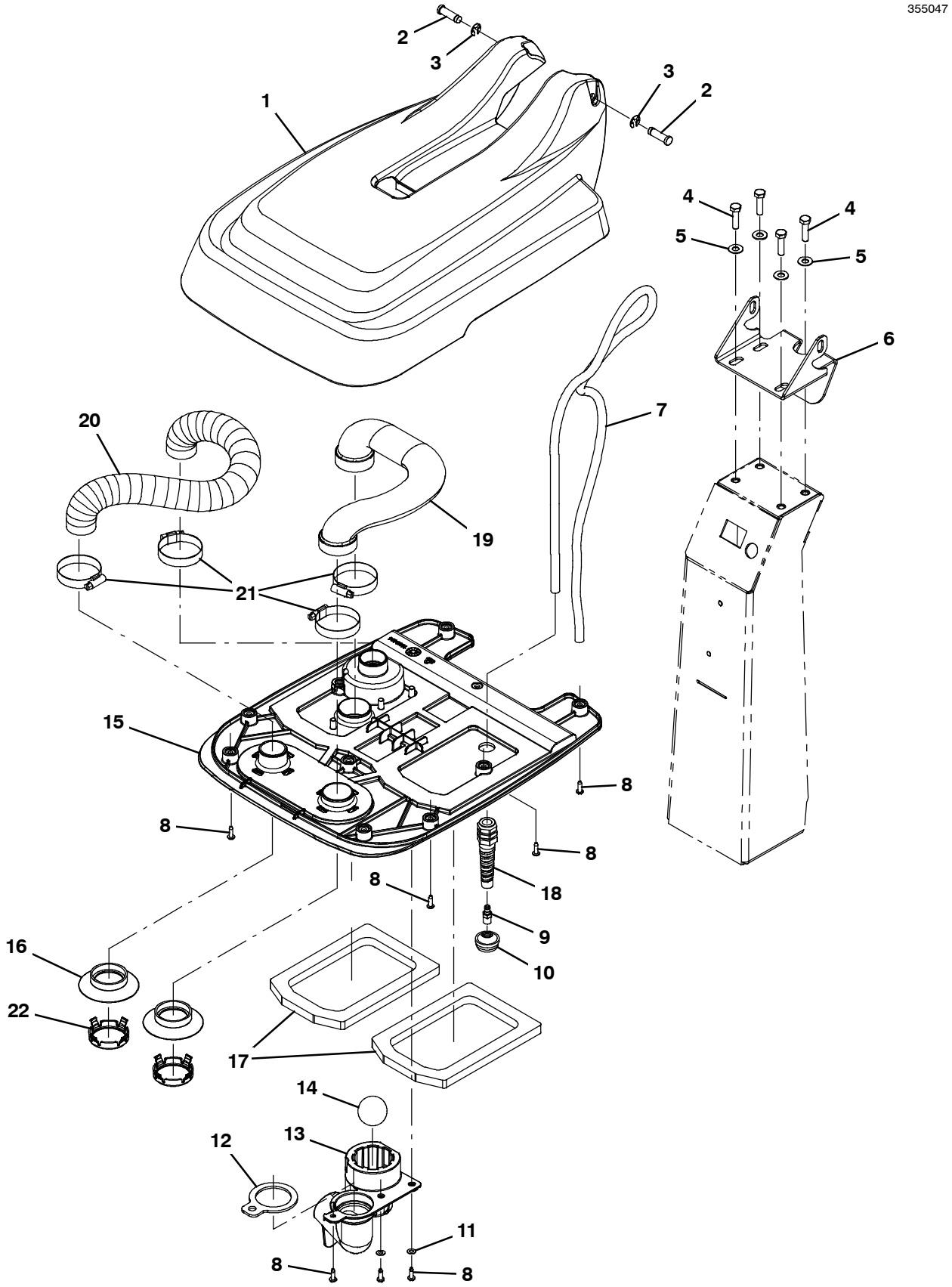

TANK COVER GROUP

	Ref.	Part No.	Serial Number	Description	Qty.
	1	1031638	(30000000- 40000000)	Cover , Tank, Upper, Tennant [Trex]	1
	2	1035358	(30000000- 40000000)	Pin, Grvd, 0.375d, 1.25l	2
	3	24555	(30000000- 40000000)	Ring, Retaining, Ext, 0.38d, [E- Ring]	2
	4	1016399	(30000000- 40000000)	Screw, Hex, M8 X 1.25 X 30, Nl, Ss	4
	5	140027	(30000000- 40000000)	Washer, Flat, 0.35b 0.75d .04, Ss	4
	6	1034346	(30000000- 40000000)	Bracket, Pivot, Cover, Mtg	1
	7	1036063	(30000000- 40000000)	Hose, Soltn, .25 Id, .453 Od, 56.0 L	1
	8	140340	(30000000- 40000000)	Screw, Pan, Phl, 10- 24 X 0.62, Ss[Typ25]	13
	9	1042715	(30000000- 40000000)	Fitting, Brs, Str, Bm04/Pm02	1
	10	1074694	(30000000- 40000000)	Filter, Tube, Soltn, 200mesh	1
	11	140011	(30000000- 40000000)	Washer, Flat, 0.21b 0.45d .03, Ss	2
	12	1051274	(30000000- 40000000)	Gasket, Shield, Float	1
	13	1042277	(30000000- 40000000)	Shield, Float	1
	14	1044370	(30000000- 40000000)	Ball, Float, W/O Cage	1
∇	15	9005924	(30000000- 40000000)	Cover, Tank, Inner W/ Seals, Kit	1
▲	16	1036090	(30000000- 40000000)	Seal, Vacuum [Trex]	2
▲	17	1052876	(30000000- 40000000)	Gasket, Tank	2
▲	18	602849	(30000000- 40000000)	Strainrelief, Cord, Ele, Pm08, Blk Nyl	1
	19	1035866	(30000000- 40000000)	Hose, Recvy, Formed [Trex]	1
	20	1037756	(30000000- 40000000)	Hose, Vacuum, 1.5od, 18.0l [Wire- Reinf]	1
	21	140308	(30000000- 40000000)	Clamp, Hose, Wormdrive, 1.31- 2.25d, .50w	4
	22	1054345	(30000000- 40000000)	Clip, Retaining, Seal	2

∇ ASSEMBLY

▲ INCLUDED IN ASSEMBLY

VACUUM FAN GROUP

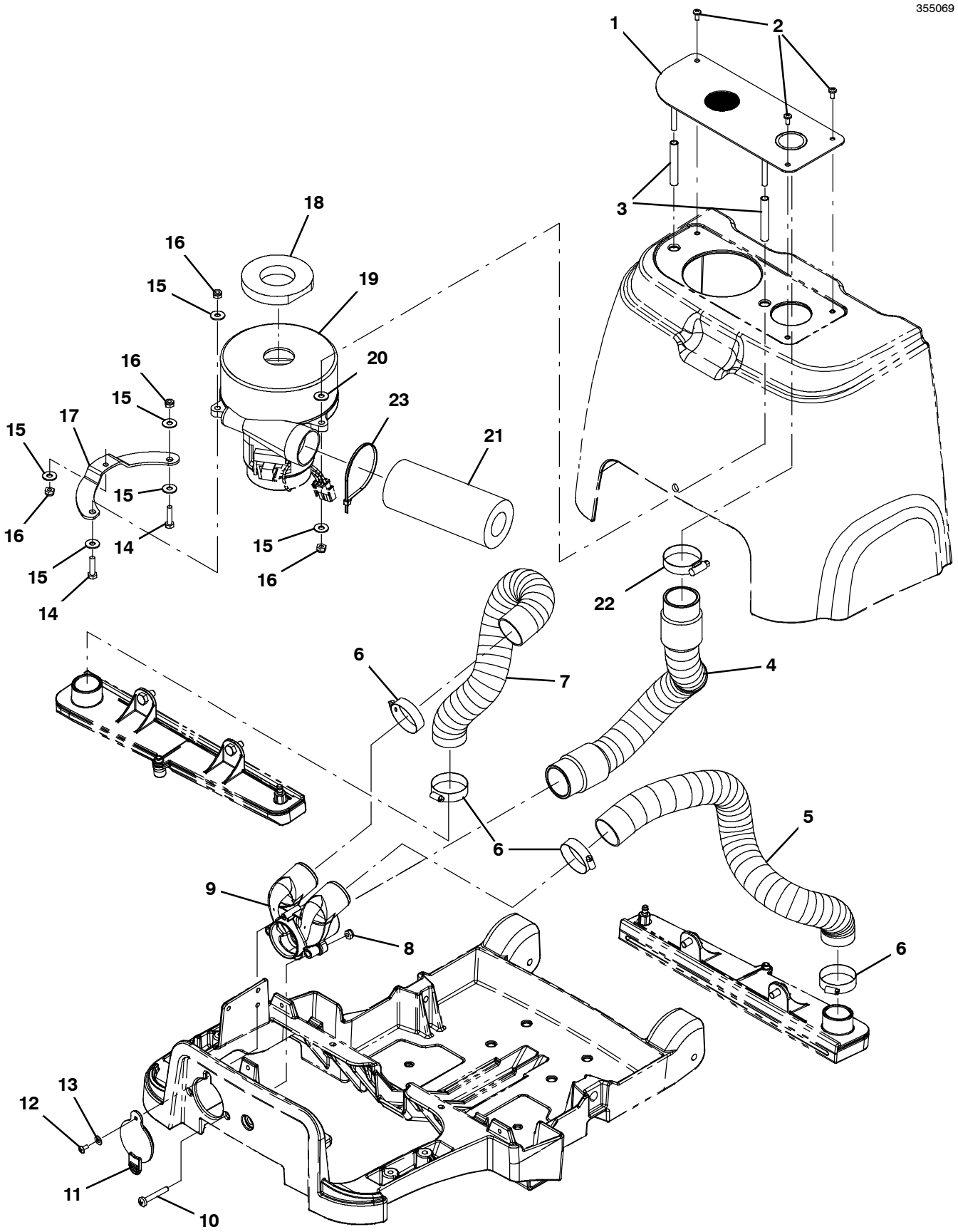

VACUUM FAN GROUP

	Ref.	Part No.	Serial Number	Description	Qty.
	1	1031960	(30000000- 40000000)	Plate, Mtg, Vacuum	1
	2	1026454	(30000000- 40000000)	Screw, Pan, Phl, M5 X 0.80 X 10, Ss	3
	3	610144	(30000000- 40000000)	Spacer, Fan	2
	4	1032555	(30000000- 40000000)	Hose, Vacuum, 1.50id X 19.5l, 2cuff, Clr	1
	5	1038373	(30000000- 40000000)	Hose, Vacuum, Wir, 38.0id X 570.0l, Clr	1
	6	79381	(30000000- 40000000)	Clamp, Hose, Wormdrive, 1.25- 2.00d, .50w	4
	7	1038379	(30000000- 40000000)	Hose, Vacuum, Wir, 38.0id X 335.0l, Clr	1
	8	08708	(30000000- 40000000)	Nut, Hex, Lock, M6 X 1.00, Nl	2
	9	1050092	(30000000- 40000000)	Manifold, Soltn, Wand [Trex]	1
	10	09258	(30000000- 40000000)	Screw, Pan, Phl, M6 X 1.00 X 40, 4.8	2
	11	607183	(30000000- 40000000)	Seal, Cap, Vacuum Tool [607170]	1
	12	140801	(30000000- 40000000)	Screw, Trs, Phl, 08- 32 X 0.38, Ss	1
	13	140011	(30000000- 40000000)	Washer, Flat, 0.21b 0.45d .03, Ss	1
	14	09007	(30000000- 40000000)	Screw, Hex, M6 X 1.00 X 25, Ss	2
	15	01684	(30000000- 40000000)	Washer, Flat, 0.27b 0.69d .05, Ss	6
	16	08708	(30000000- 40000000)	Nut, Hex, Lock, M6 X 1.00, Nl	4
	17	1034069	(30000000- 40000000)	Plate, Vac Mounting	1
	18	630010	(30000000- 40000000)	Gasket, 12.7mm Th, 43mmid 73mmod	1
∇	19	9012566	(30000000- 40000000)	Fan Kit, Vacuum, 5.7d, 120vac, 2 Stage	1
▲		1071842	(30000000- 40000000)	Vr, Brush Kit, Vac Fan 1071839	1
▲	20	01684	(30000000- 40000000)	Washer, Flat, 0.27b 0.69d .05, Ss	1
∇	19	9012567	(30000000- 40000000)	Fan Kit, Vacuum, 5.7d, 240vac, 2 Stage	1
▲		1071843	(30000000- 40000000)	Vr, Brush Kit, Vac Fan 1071840	1
▲	20	01684	(30000000- 40000000)	Washer, Flat, 0.27b 0.69d .05, Ss	1
	21	600009	(30000000- 40000000)	Muffler, Exhaust, Vacfan	1
	22	11531	(30000000- 40000000)	Clamp, Hose, Wormdrive, 1.06- 2.00d, .56w	1
	23	130773	(30000000- 40000000)	Tie, Cable, Nyl, 11.0l, .14w, 3.0 Max. D	1

∇ ASSEMBLY

▲ INCLUDED IN ASSEMBLY

SOLUTION GROUP

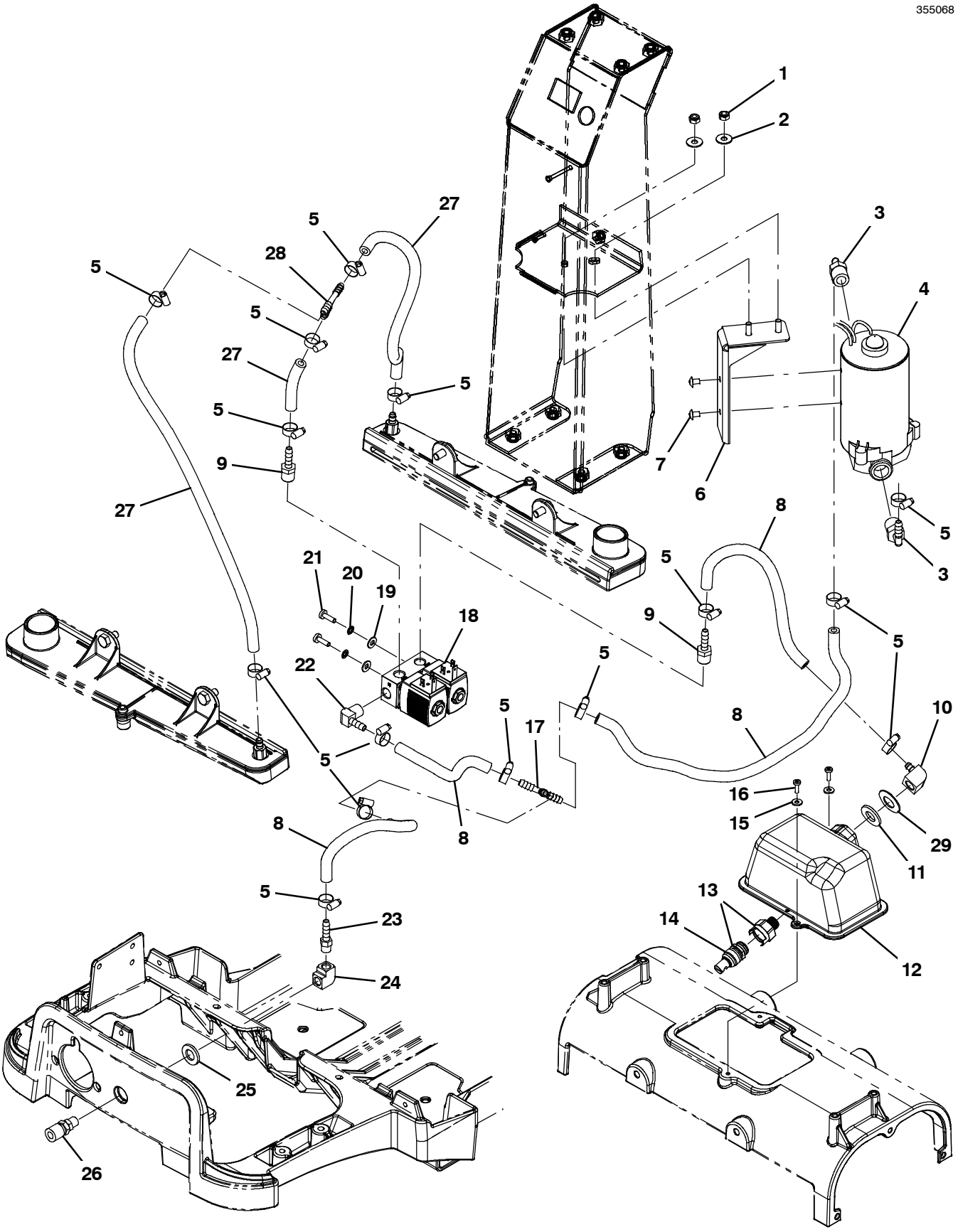

SOLUTION GROUP

	Ref.	Part No.	Serial Number	Description	Qty.
	1	08712	(30000000- 40000000)	Nut, Hex, Lock, M6 X 1.00, Nl, Ss	2
	2	01684	(30000000- 40000000)	Washer, Flat, 0.27b 0.69d .05, Ss	2
	3	150417	(30000000- 40000000)	Fitting, Plstc, E90, Bm04/Pm06	2
	4	1031915	(30000000- 40000000)	Pump, Soltn, Ele, 110vac	1
	4	1032241	(30000000- 40000000)	Pump, Ele, Soltn, 230v	1
	5	43844	(30000000- 40000000)	Clamp, Hose, Wormdrive, 0.25- 0.62d, .31w	15
	6	1034331	(30000000- 40000000)	Bracket, Pump	1
	7	140874	(30000000- 40000000)	Screw, Hex, 10- 32 X 0.38, Pl [Inwa Ty1]	2
	8	606364	(30000000- 40000000)	Hose, Pvc, Brd, 0.25id 0.50od 60.0l,Gray (160204)	1
	9	150515	(30000000- 40000000)	Fitting, Brs, Str, Bm04/Pm04 [Taped]	2
	10	1028773	(30000000- 40000000)	Fitting, Brs, E90, Bm04/Pf04	1
	11	32486	(30000000- 40000000)	Washer, Flat, 0.50, Sae	1
	12	1033445	(30000000- 40000000)	Shroud, Splash, Nozzle [Trex]	1
∇	13	1061033	(30000000- 40000000)	Nozzle Assy, Spray [1/4qjja+Qtka- 1]]	1
▲	14	1034685	(30000000- 40000000)	Nozzle, Tip, Spray [Qtka]	1
	15	41579	(30000000- 40000000)	Washer, Flat, 08, Ss	2
	16	579237	(30000000- 40000000)	Screw, Pan, Phl, M4 X 0.70 X 12, Ss	2
	17	150713	(30000000- 40000000)	Fitting, Plstc, Tee, Bm04/Bm04/Bm04	1
	18	1037846	(30000000- 40000000)	Manifold, Soltn, 120 Volt	1
	18	1038022	(30000000- 40000000)	Manifold, Soltn, 230 Volt	1
	19	01683	(30000000- 40000000)	Washer, Flat, 10, Ss	2
	20	07514	(30000000- 40000000)	Washer, Lock, Int, 10, Ss	2
	21	140841	(30000000- 40000000)	Screw, Pan, Phl, 10- 32 X 0.62, Ss	2
	22	150418	(30000000- 40000000)	Fitting, Brs, E90, Bm04/Pm04	1
	23	150525	(30000000- 40000000)	Fitting, Brs, Str, Bm04/Pm02	1
	24	150402	(30000000- 40000000)	Fitting, Brs, E90, Pf02/Pf02	1
	25	3148.816	(30000000- 40000000)	Washer, Flat, 0.52b 0.88d .06, Stl, Pl	1
	26	150915	(30000000- 40000000)	Fitting, Brs, Qdc, Pm02, Fem [Ser 5]	1
	27	606161	(30000000- 40000000)	Hose, Pvc, Brd, 0.25id 0.50od 36.0l,Gray (160204)	1
	28	150713	(30000000- 40000000)	Fitting, Plstc, Tee, Bm04/Bm04/Bm04	1
	29	1035296	(30000000- 40000000)	Washer, Flat, Belleville, .567	1

∇ ASSEMBLY

▲ INCLUDED IN ASSEMBLY

SCRUB HEAD GROUP, 120V

355264

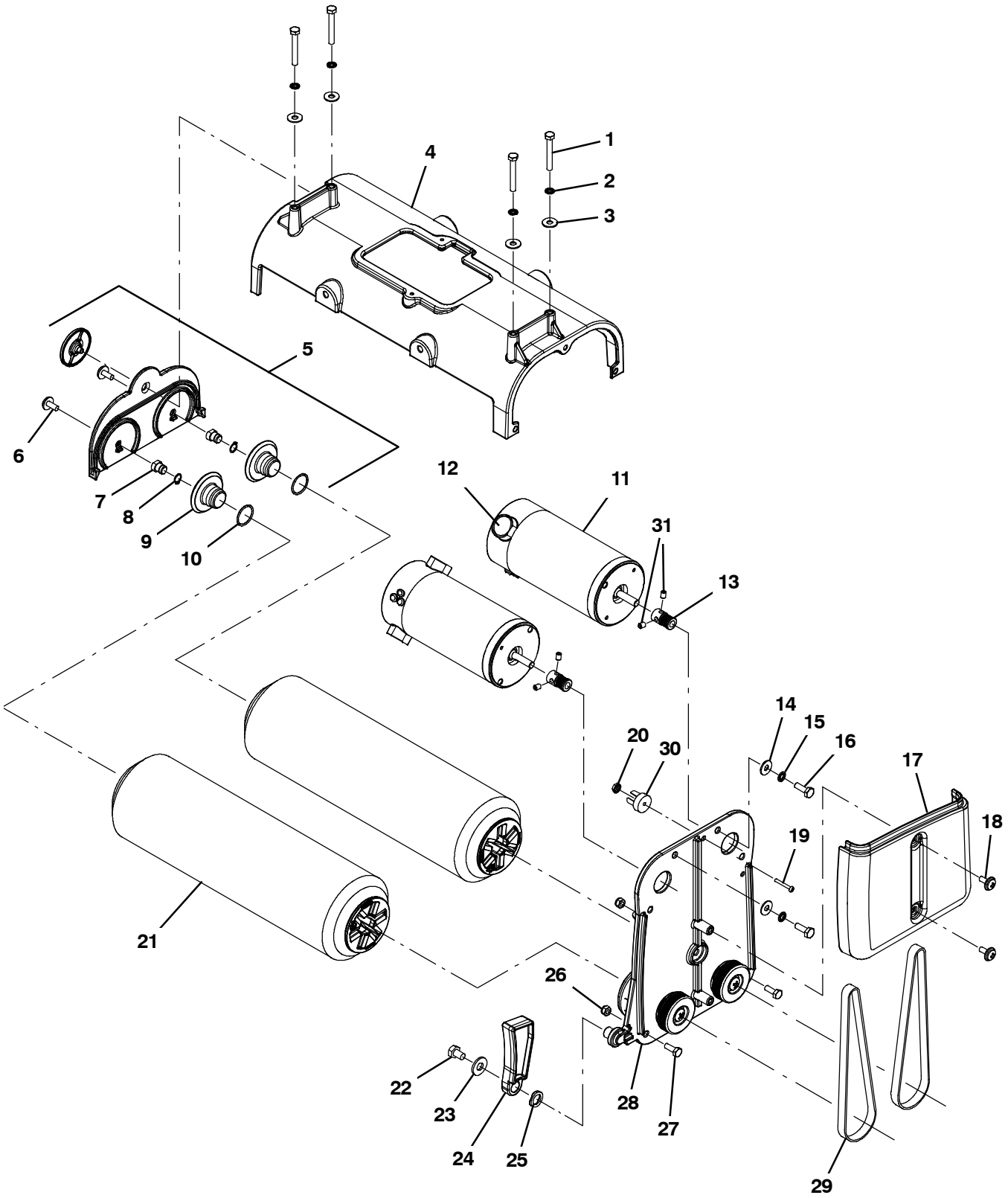

SCRUB HEAD GROUP, 120V

	Ref.	Part No.	Serial Number	Description	Qty.
	1	1045325	(30000000- 40000000)	Screw, Hex, M6 X 1.00 X 45, Ss	8
	2	1027144	(30000000- 40000000)	Washer, Lock, Int, M6, Ss	8
	3	01684	(30000000- 40000000)	Washer, Flat, 0.27b 0.69d .05, Ss	8
	4	1054903	(30000000- 40000000)	Housing, Brush, Dbl, 40cm	1
∇	5	9007963	(30000000- 40000000)	Door Kit, Brush, W/ Hdwr	1
▲	6	1019349	(30000000- 40000000)	Screw, Trs, M6 X 1.00 X 16, Ss, Sems	2
▲	7	1030682	(30000000- 40000000)	Shaft, Idler Plug	2
▲	8	01543	(30000000- 40000000)	Ring, Retaining, Ext, 0.39d, Basic	2
▲	9	1030680	(30000000- 40000000)	Hub, Idler, Brush	2
▲	10	1042312	(30000000- 40000000)	Seal, Org, .103 X .862 Id, 118	2
∇	11	1072721	(30000000- 40000000)	Motor, Ele, 115vdc 1550rpm .25hp 2.3a	2
▲	12	1067897	(30000000- 40000000)	Vr, Brush Kit, Motor	4
	13	1030623	(30000000- 40000000)	Sheave, 07grv, 16.03pd [Ph]	2
	14	01684	(30000000- 40000000)	Washer, Flat, 0.27b 0.69d .05, Ss	4
	15	07515	(30000000- 40000000)	Washer, Lock, Int, 0.25, Ss	4
	16	34323	(30000000- 40000000)	Screw, Hex, .25- 20 X 0.75, Nl	4
	17	1031169	(30000000- 40000000)	Cover, Belt, Bl- Gr (Dual Roller)	1
	18	1019349	(30000000- 40000000)	Screw, Trs, M6 X 1.00 X 16, Ss, Sems	2
	19	140946	(30000000- 40000000)	Screw, Rnd, Sltd, 06- 32 X 1.00, Nyl	1
	20	140534	(30000000- 40000000)	Nut, Hex, #06- 32, Nyl	1
	21	1028953	(30000000- 40000000)	Roller Assy, Readyspace	2
	22	386868	(30000000- 40000000)	Screw, Hex, M8 X 1.25 X 12, Ss	1
	23	07515	(30000000- 40000000)	Washer, Lock, Int, 0.25, Ss	1
	24	1042443	(30000000- 40000000)	Support, Kickstand, Blk, Nyl	1
	25	140060	(30000000- 40000000)	Washer .505x.750x.045 Wave	1
	26	08712	(30000000- 40000000)	Nut, Hex, Lock, M6 X 1.00, Nl, Ss	3
	27	15678	(30000000- 40000000)	Screw, Hex, M6 X 1.00 X 16, Ss	3
	28	9004280	(30000000- 40000000)	Bracket, Motor Mount W/ Bearing/Seal Kit	1
	29	9004282	(30000000- 40000000)	Belt Kit, W/ Installation Tool [Qty 2]	1
	30	130288	(30000000- 40000000)	Rectifier, Bridge, Rnd, 12a 1000volt, Ce	1
	31	09162	(30000000- 40000000)	Screw, Set, Soc, M6 X 1.00 X 8, Nl	4

∇ ASSEMBLY

▲ INCLUDED IN ASSEMBLY

SCRUB HEAD GROUP, 230V

355265

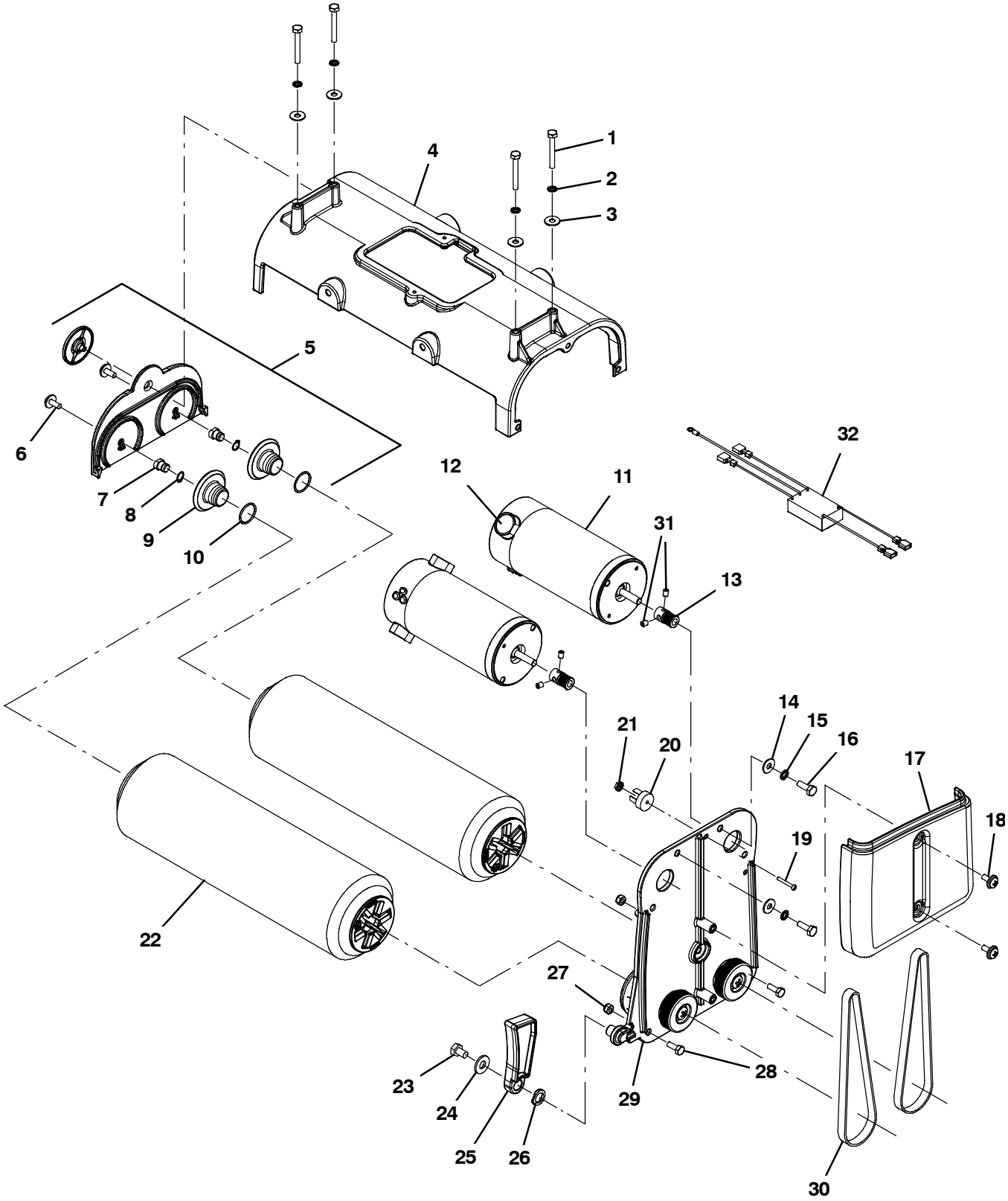

SCRUB HEAD GROUP, 230V

	Ref.	Part No.	Serial Number	Description	Qty.
	1	1045325	(30000000- 40000000)	Screw, Hex, M6 X 1.00 X 45, Ss	8
	2	1027144	(30000000- 40000000)	Washer, Lock, Int, M6, Ss	8
	3	01684	(30000000- 40000000)	Washer, Flat, 0.27b 0.69d .05, Ss	8
	4	1054903	(30000000- 40000000)	Housing, Brush, Dbl, 40cm	1
∇	5	9007963	(30000000- 40000000)	Door Kit, Brush, W/ Hdwr	1
▲	6	1019349	(30000000- 40000000)	Screw, Trs, M6 X 1.00 X 16, Ss, Sems	2
▲	7	1030682	(30000000- 40000000)	Shaft, Idler Plug	2
▲	8	01543	(30000000- 40000000)	Ring, Retaining, Ext, 0.39d, Basic	2
▲	9	1030680	(30000000- 40000000)	Hub, Idler, Brush	2
▲	10	1042312	(30000000- 40000000)	Seal, Org, .103 X .862 Id, 118	2
∇	11	1072722	(30000000- 40000000)	Motor, Ele, 230vdc 1600rpm .25hp 1.2a	2
▲	12	1067897	(30000000- 40000000)	Vr, Brush Kit, Motor	4
	13	1030623	(30000000- 40000000)	Sheave, 07grv, 16.03pd [Ph]	2
	14	01684	(30000000- 40000000)	Washer, Flat, 0.27b 0.69d .05, Ss	4
	15	07515	(30000000- 40000000)	Washer, Lock, Int, 0.25, Ss	4
	16	34323	(30000000- 40000000)	Screw, Hex, .25- 20 X 0.75, Nl	4
	17	1031169	(30000000- 40000000)	Cover, Belt, Bl- Gr (Dual Roller)	1
	18	1019349	(30000000- 40000000)	Screw, Trs, M6 X 1.00 X 16, Ss, Sems	2
	19	140946	(30000000- 40000000)	Screw, Rnd, Sltd, 06- 32 X 1.00, Nyl	1
	20	130288	(30000000- 40000000)	Rectifier, Bridge, Rnd, 12a 1000volt, Ce	1
	21	140534	(30000000- 40000000)	Nut, Hex, #06- 32, Nyl	1
	22	1028953	(30000000- 40000000)	Roller Assy, Readyspace	2
	23	386868	(30000000- 40000000)	Screw, Hex, M8 X 1.25 X 12, Ss	1
	24	07515	(30000000- 40000000)	Washer, Lock, Int, 0.25, Ss	1
	25	1042443	(30000000- 40000000)	Support, Kickstand, Blk, Nyl	1
	26	140060	(30000000- 40000000)	Washer .505x.750x.045 Wave	1
	27	08712	(30000000- 40000000)	Nut, Hex, Lock, M6 X 1.00, Nl, Ss	3
	28	15678	(30000000- 40000000)	Screw, Hex, M6 X 1.00 X 16, Ss	3
	29	9004280	(30000000- 40000000)	Bracket, Motor Mount W/ Bearing/Seal Kit	1
	30	9004282	(30000000- 40000000)	Belt Kit, W/ Installation Tool [Qty 2]	1
	31	09162	(30000000- 40000000)	Screw, Set, Soc, M6 X 1.00 X 8, Nl	4
	32	1036953	(30000000- 40000000)	Filter, Brush, 270 Vdc, 3a	1

∇ ASSEMBLY

▲ INCLUDED IN ASSEMBLY

ROLLER TOOL GROUP

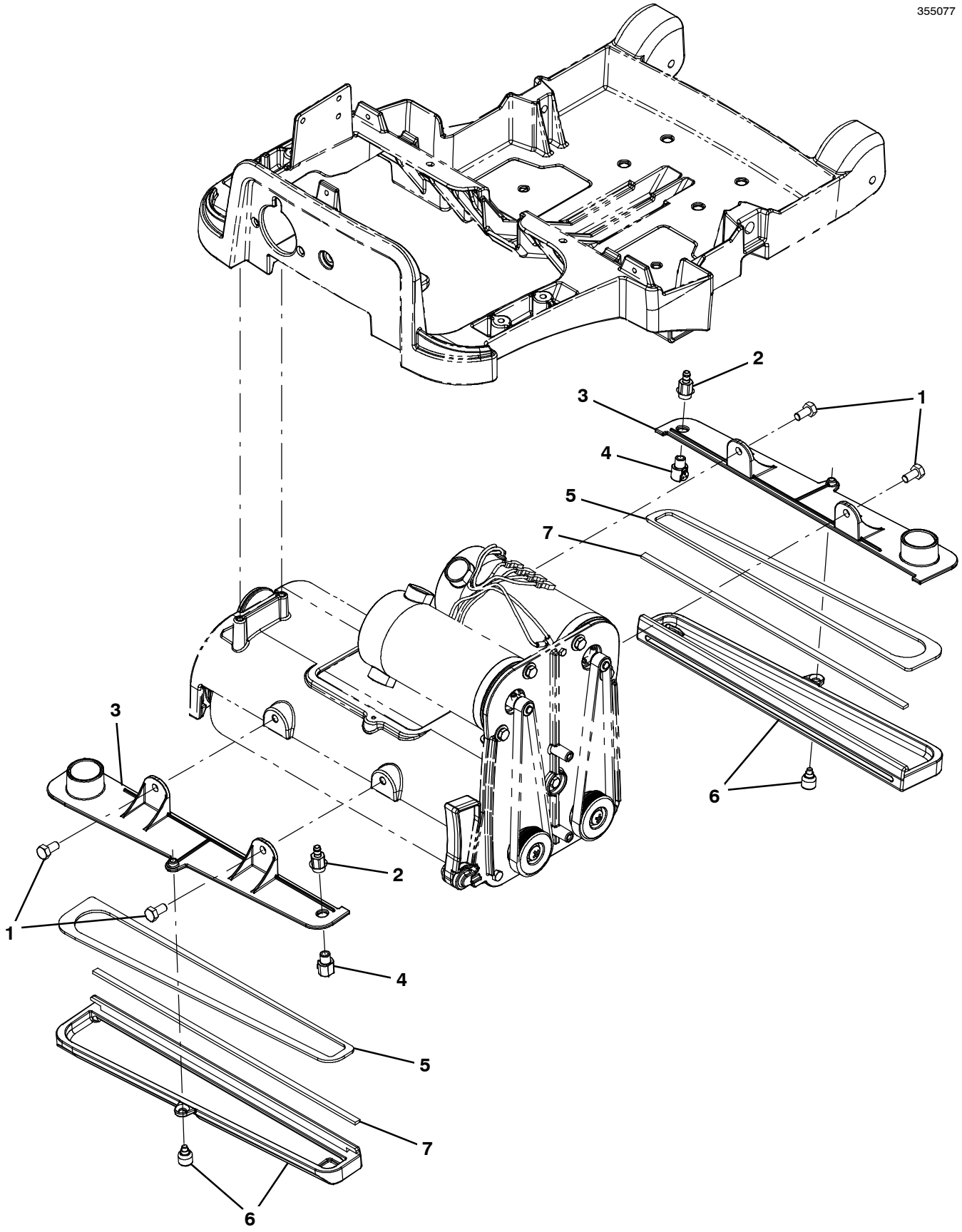

ROLLER TOOL GROUP

Ref.	Part No.	Serial Number	Description	Qty.
1	49826	(30000000- 40000000)	Screw, Hex, M8 X 1.25 X 16, Nl, Ss	4
2	1040254	(30000000- 40000000)	Fitting, Brs, Str, Bm04/Pf02	2
3	1054838	(30000000- 40000000)	Cover, Tool, Str Roll Vacuum, 380mm	2
4	1037380	(30000000- 40000000)	Nozzle, Flush, Readyspace	2
5	1034819	(30000000- 40000000)	Gasket, Tool ,Cover	2
6	9004284	(30000000- 40000000)	Cover, Tool W/ Hardware Kit	2
7	9006593	(30000000- 40000000)	R3 Foam Gasket Service Kit	1

ELECTRICAL DIAGRAM, 100V / 120V

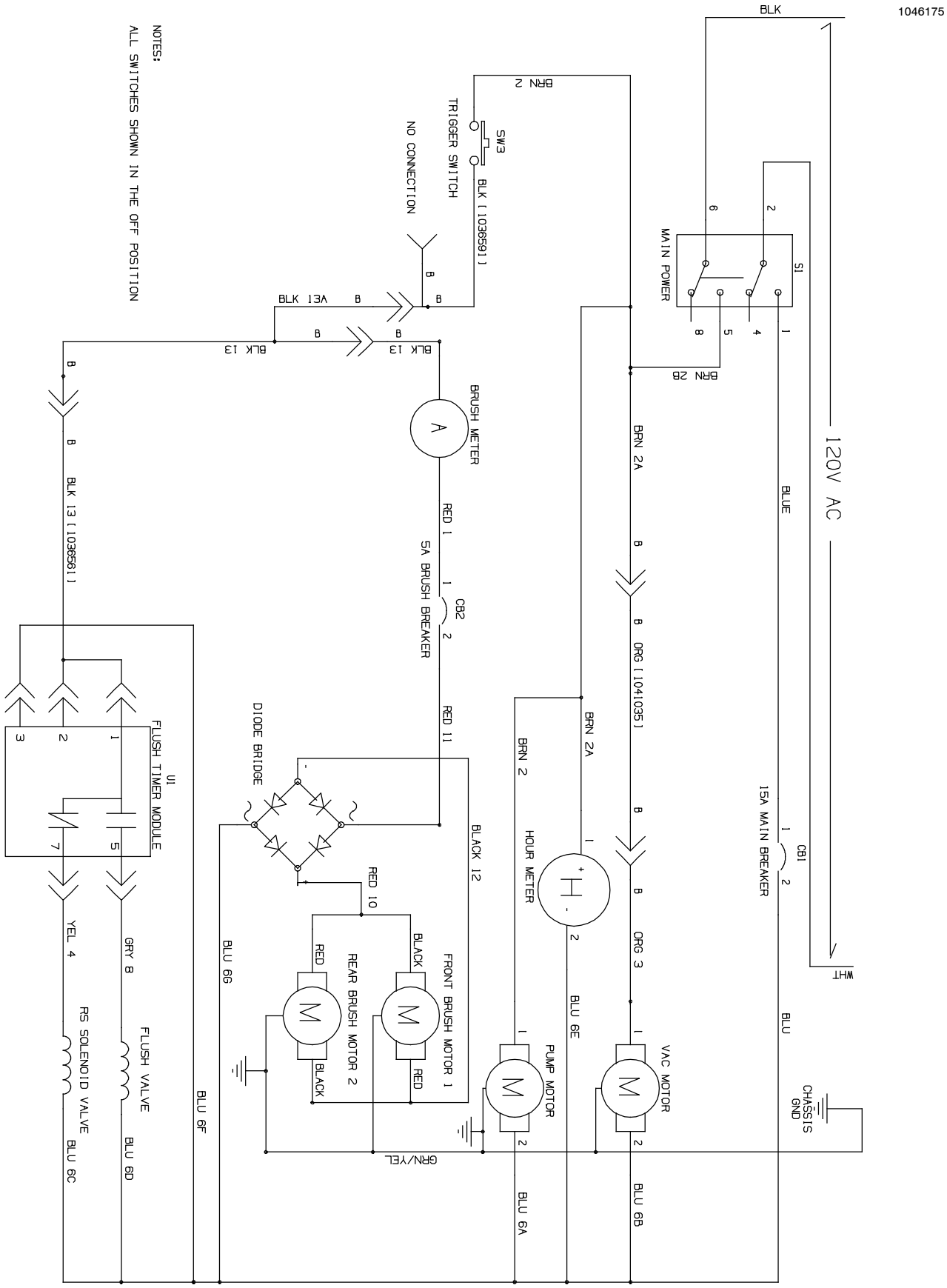

ELECTRICAL DIAGRAM, 230V

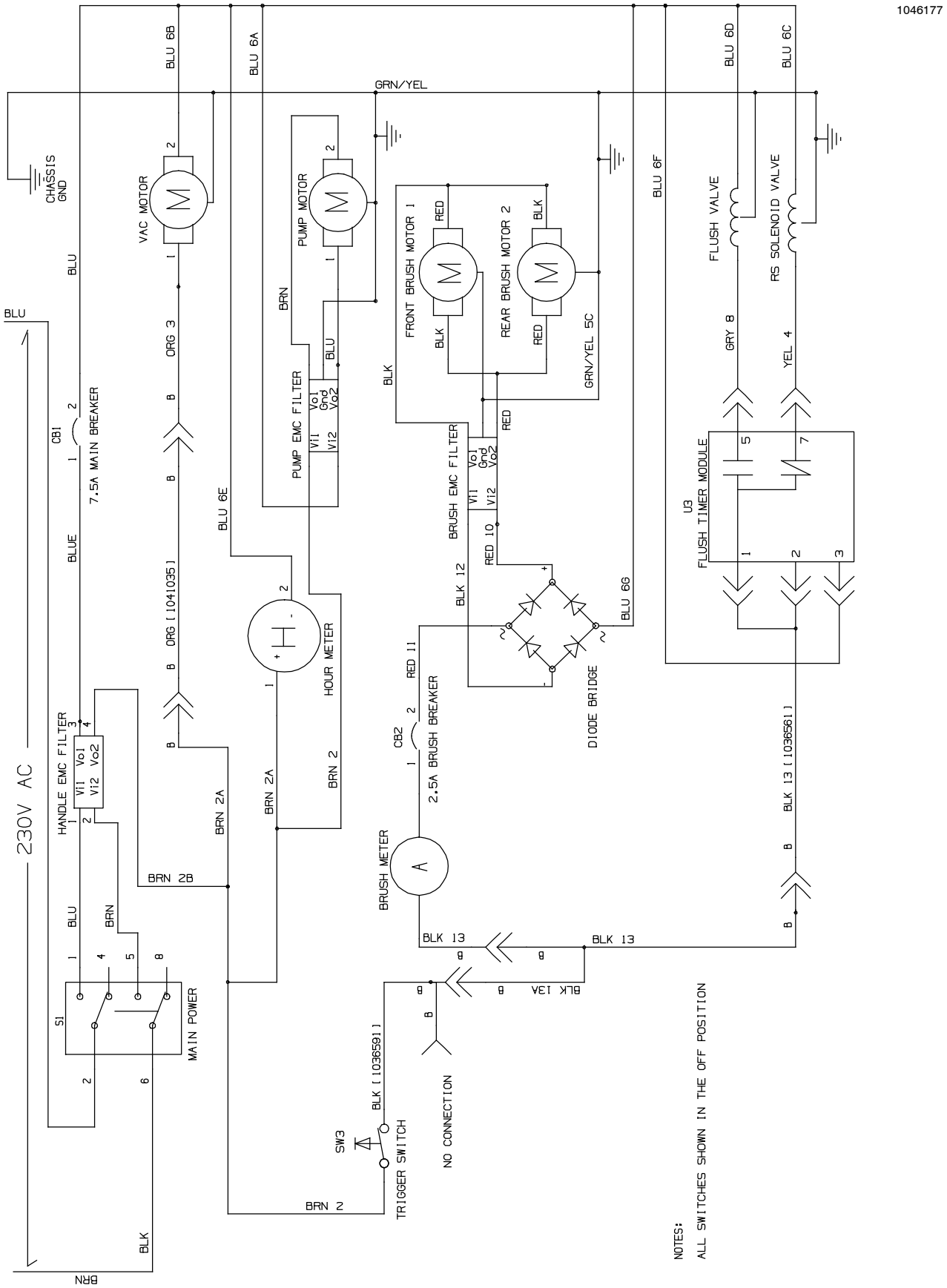

WIRE HARNESS, CHASSIS

355593

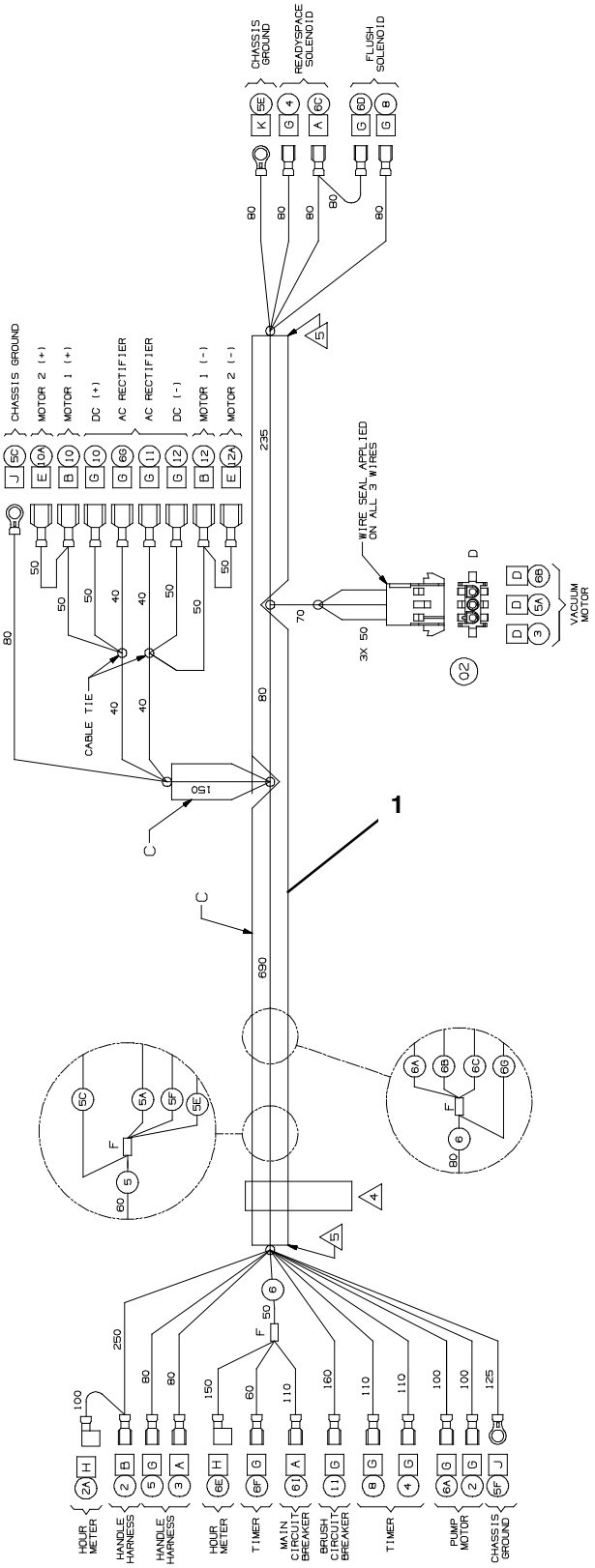

TERMINAL	TERMINAL TYPE & SIZE	MFR	MANUFACTURER'S PART NUMBER
A	.25" (16-14) FEMALE FULLY INSULATED TERMINAL.	AMP	3-350820-2
B	.25" (14-16) FULLY INSULATED MALE TAB TERMINAL	AMP	3-521191-2
C	BLACK NYLON BRAIDING		
D	CONNECTOR BODY AMP 3 CIRCUIT MATE-N-K P/N: 1-480701-0	AMP	WIRE SEAL, P/N: 794272-1 MALE TERMINAL, P/N: 350687-1
E	.25" (18-22)FULLY INSULATED MALE TAB TERMINAL.	AMP	2-520103-2
F	ALTRALSOINC CRIMP AND COVER WITH HEATSHRINK.		
G	.25" (18-22) FEMALE FULLY INSULATED TERMINAL.	AMP	2-520184-2
H	.25" (18-22) FEMALE FULLY INSULATED FLAG TERMINAL	AMP	2-520129-2
J	#8 UNINSULATED RING TERMINAL 16-22 AWG	AMP	34108
K	#10 UNINSULATED RING TERMINAL 16-22 AWG	AMP	34109

WIRE No.	AWG	COLOR
6C	18	BLUE
6D	18	BLUE
6E	18	BLUE
6F	18	BLUE
6G	18	BLUE
6H		NOT USED
6I	14	BLUE
7		NOT USED
8	18	GRAY
9		NOT USED
10	18	RED
10A	18	RED
11	18	RED
11A		NOT USED
12	18	BLACK
12A	18	BLACK

WIRE No.	AWG	COLOR
1		NOT USED
1A		NOT USED
2	18	BROWN
2A	18	BROWN
2B		NOT USED
3	14	ORANGE
4	18	YELLOW
5	18	GREEN/YELLOW
5A	18	GREEN/YELLOW
5B		NOT USED
5C	18	GREEN/YELLOW
5D		NOT USED
5E	18	GREEN/YELLOW
5F	18	GREEN/YELLOW
6	14	BLUE
6A	18	BLUE
6B	14	BLUE

Ref.	Part No.	Serial Number	Description	Qty.
1	1033926	(30000000- 40000000)	Harness, Chassis, Ele [T- Rex Readyspace]	1

FLOOR TOOL GROUP, 8 in / 203 mm

355116

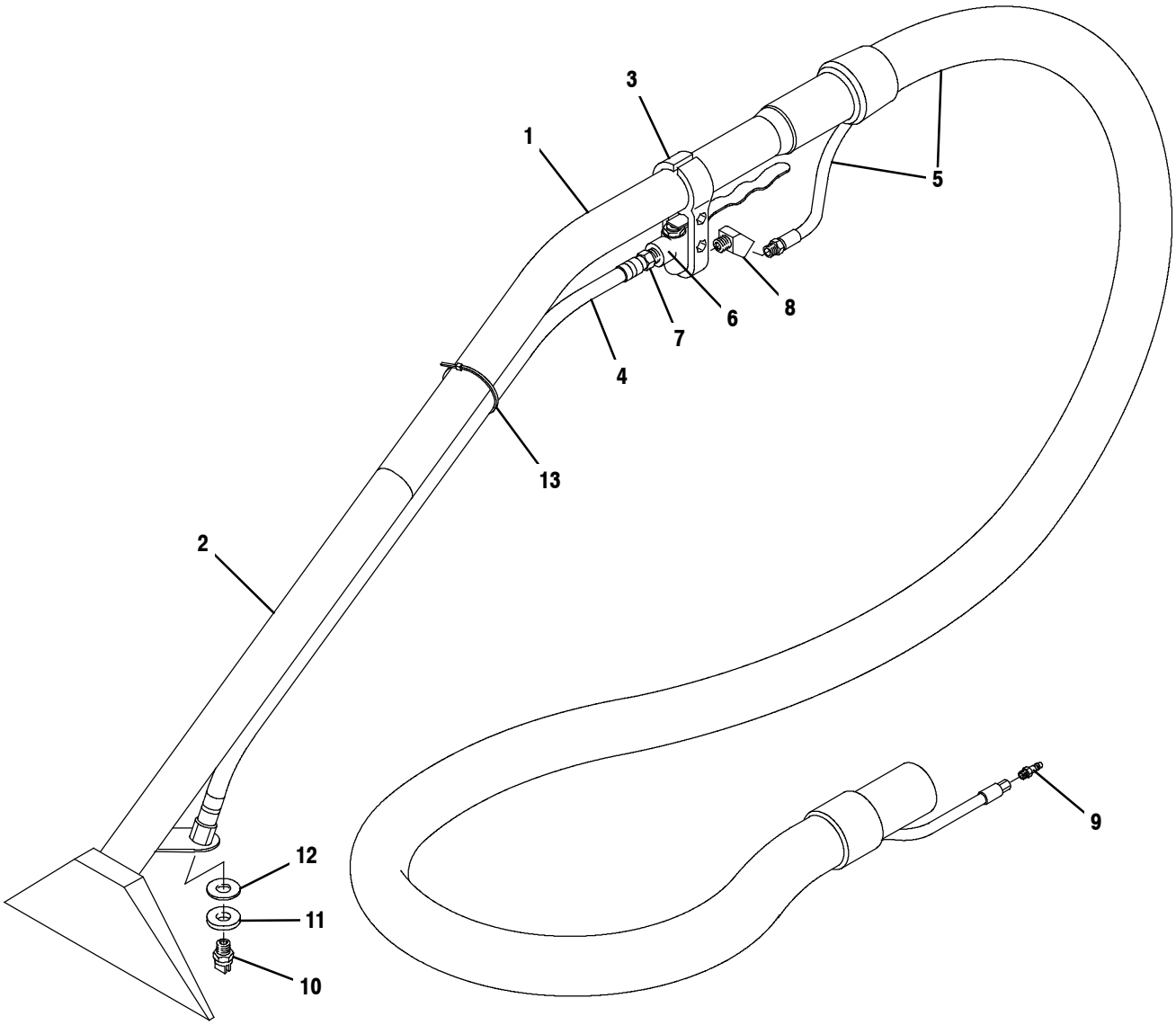

FLOOR TOOL GROUP, 8 in / 203 mm

	Ref.	Part No.	Serial Number	Description	Qty.
∇		1058735	(30000000- 40000000)	Tool Assy, Floor, W/ Ss Head	1
▲	1	1058997	(30000000- 40000000)	Wand, Tube, Upper, Fr/ 1058735, Replmt	1
▲	2	1058995	(30000000- 40000000)	Wand Assy, Lower, Fr/ 1058735, Replmt	1
▲	3	605988	(30000000- 40000000)	Vr, Bracket, Hanger, Valve	1
▲	4	1058998	(30000000- 40000000)	Hose, Brd, 39.0l, Fr/ 1058735, Replmt	1
▲	5	1059131	(30000000- 40000000)	Hose Assy, 10ft, F/1058735, Replmt	1
▲	6	578064000	(30000000- 40000000)	Valve, Water, Flow Cntrl, W/Lever [Wand]	1
▲	7	150516	(30000000- 40000000)	Fitting, Brs, Str, Bm06/Pm04	1
▲	8	150403	(30000000- 40000000)	Fitting, Brs, E45, Pf04/Pm04 [Taped]	1
▲	9	150921	(30000000- 40000000)	Fitting, Ss, Qdc, Pm02 [Ser 5]	1
▲	10	1059002	(30000000- 40000000)	Fitting, Jet, Vee, .25npt, Brs	1
▲	11	1058999	(30000000- 40000000)	Washer, Flat, Abs, F/ 1058735, Replmt	1
▲	12	140058	(30000000- 40000000)	Washer, Flat, 0.54b 0.88d .06, Ss [Wand]	1
▲	13	130041	(30000000- 40000000)	Tie, Cable, Nyl, 11.5l .19w	1
	N/S	220040	(30000000- 40000000)	Bag, Hose, Accssry, 24x36[W/Draw String] (Optional)	1

∇ ASSEMBLY

▲ INCLUDED IN ASSEMBLY

HAND TOOL GROUP, 4 in / 101 mm

355117

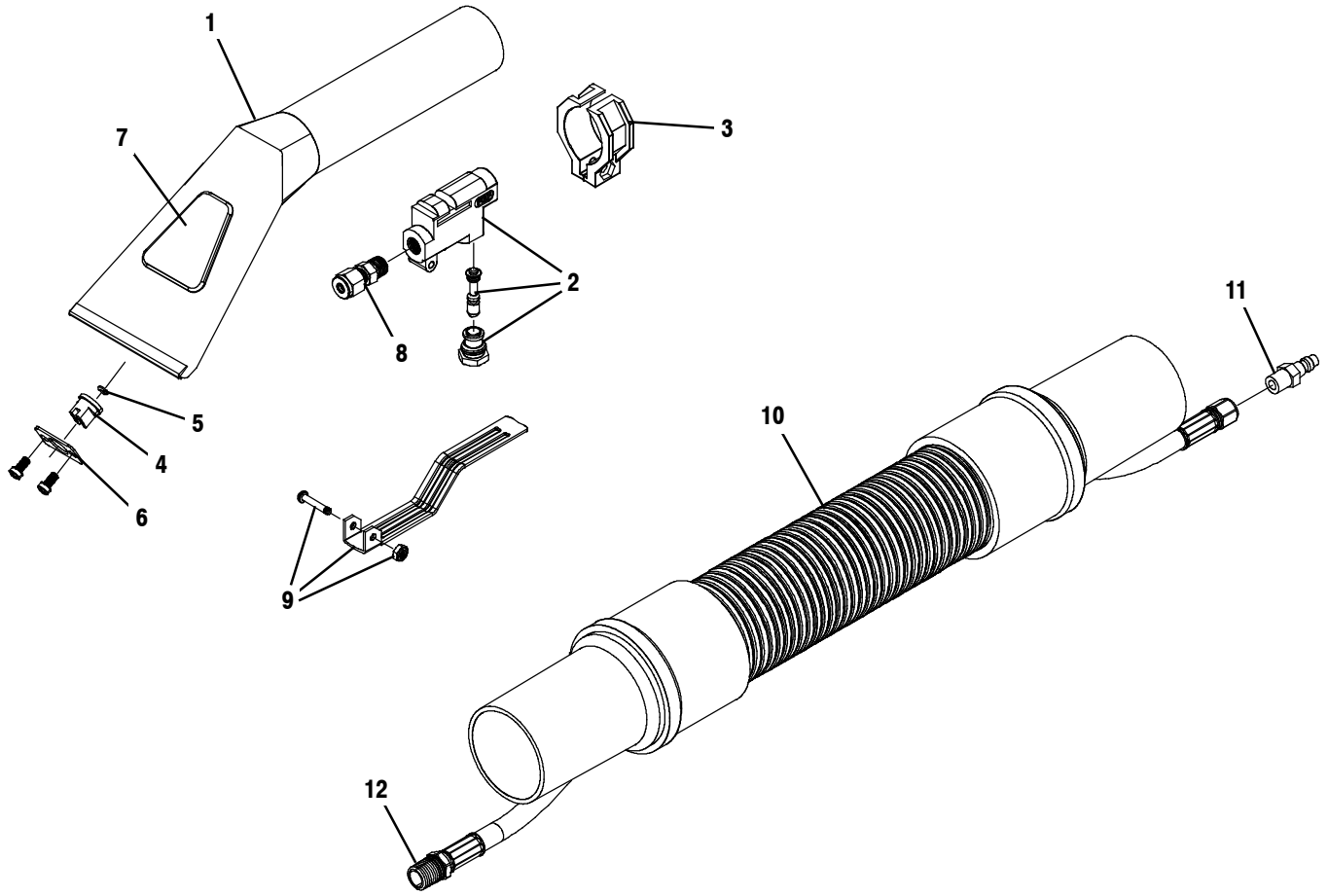

	Ref.	Part No.	Serial Number	Description	Qty.
		1058747	(30000000- 40000000)	Tool Assy, Hand, W/ Ss Head & Plstc Wndw	1
∇	1	1059230	(30000000- 40000000)	Tool Assy, W/Trigger F/1058747, Replmt	1
▲	1	1059003	(30000000- 40000000)	Tool, W/ Wndw, Ss, F/1058747, Replmt	1
▲	2	611807	(30000000- 40000000)	Valve, Tool, Hand [Pmf]	1
▲	3	611812	(30000000- 40000000)	Valve, Hanger [Pmf]	1
▲	4	1059006	(30000000- 40000000)	Fitting, Jet, Tee, Plstc, Fr/ 1058747	1
▲	5	1059005	(30000000- 40000000)	Seal, Org, Fr/ 1058747, Replmt	1
▲	6	611815	(30000000- 40000000)	Retainer, Plate [Pmf]	1
▲	7	1059004	(30000000- 40000000)	Tool, Wndw, Plstc, Fr/ 1058747	1
▲	8	611817	(30000000- 40000000)	Ferrule, Pm02/.18tube	1
▲	9	611818	(30000000- 40000000)	Trigger, Handle Pmf	1
∇	10	1059130	(30000000- 40000000)	Hose Assy, 10ft, F/1058747, Replmt	1
▲	11	150921	(30000000- 40000000)	Fitting, Ss, Qdc, Pm02 [Ser 5]	1
▲	12	150521	(30000000- 40000000)	Fitting, Brs, Str, Bm02/Pf02	1
	N/S	220040	(30000000- 40000000)	Bag, Hose, Accssry, 24x36[W/Draw String] (Optional)	1

∇ ASSEMBLY

▲ INCLUDED IN ASSEMBLY

PUMP-UP CARPET SPRAYER

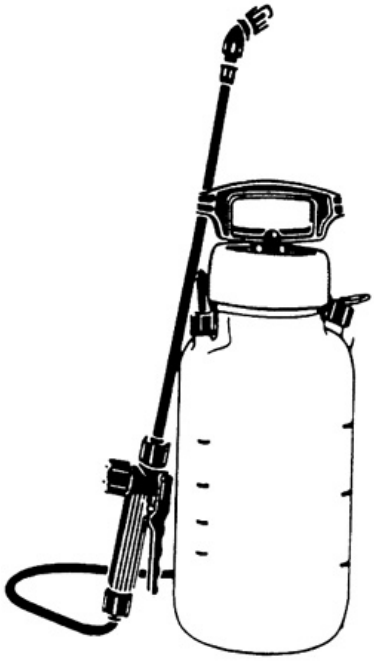

Ref.	Part No.	Serial Number	Description	Qty.
	605848	(30000000- 40000000)	Sprayer 2gal Pumpup Hd	1

DOCUMENTATION GROUP

Ref.	Part No.	Serial Number	Description	Qty.
	9012802	(30000000- 40000000)	Manual, Parts [R3, En]	1
	9003732	(30000000- 40000000)	Manual, Oprtr [R3, En/Es/Fr/Jp]	1
	9003707	(30000000- 40000000)	Manual, Oprtr, Ce [R3, En]	1
	9003708	(30000000- 40000000)	Manual, Oprtr, Ce [R3, De]	1
	9003709	(30000000- 40000000)	Manual, Oprtr, Ce [R3, Fr]	1
	9003710	(30000000- 40000000)	Manual, Oprtr, Ce [R3, Nl]	1
	9003711	(30000000- 40000000)	Manual, Oprtr, Ce [R3, Es]	1
	9003712	(30000000- 40000000)	Manual, Oprtr, Ce [R3, It]	1
	9003716	(30000000- 40000000)	Manual, Oprtr, Ce [R3, Fi]	1
	9003713	(30000000- 40000000)	Manual, Oprtr, Ce [R3, Se]	1
	9003715	(30000000- 40000000)	Manual, Oprtr, Ce [R3, No]	1
	9003714	(30000000- 40000000)	Manual, Oprtr, Ce [R3, Dk]	1
	9003719	(30000000- 40000000)	Manual, Oprtr, Ce [R3, Cz]	1
	9004223	(30000000- 40000000)	Manual, Oprtr, Ce [R3, Bg]	1
	9003721	(30000000- 40000000)	Manual, Oprtr, Ce [R3, Gr]	1
	9003727	(30000000- 40000000)	Manual, Oprtr, Ce [R3, Lt]	1
	9003728	(30000000- 40000000)	Manual, Oprtr, Ce [R3, Ee]	1
	9003723	(30000000- 40000000)	Manual, Oprtr, Ce [R3, Tr]	1
	9003729	(30000000- 40000000)	Manual, Oprtr, Ce [R3, Rm]	1
	9003718	(30000000- 40000000)	Manual, Oprtr, Ce [R3, Pl]	1
	9003726	(30000000- 40000000)	Manual, Oprtr, Ce [R3, Lv]	1
	9003725	(30000000- 40000000)	Manual, Oprtr, Ce [R3, Si]	1
	9003724	(30000000- 40000000)	Manual, Oprtr, Ce [R3, Sk]	1
	9003722	(30000000- 40000000)	Manual, Oprtr, Ce [R3, Ru]	1
	9013296	(30000000- 40000000)	Manual, Oprtr [R3, Hr]	1
	9004226	(30000000- 40000000)	Instr, Use&Care, Wallchart [R3]	1

To view, print, order, download the latest Parts manual, other language Operator manuals, and Use and Care Guides (wall charts), visit:

www.tennantco.com/manual